Oregon OSHA

Excavation Safety

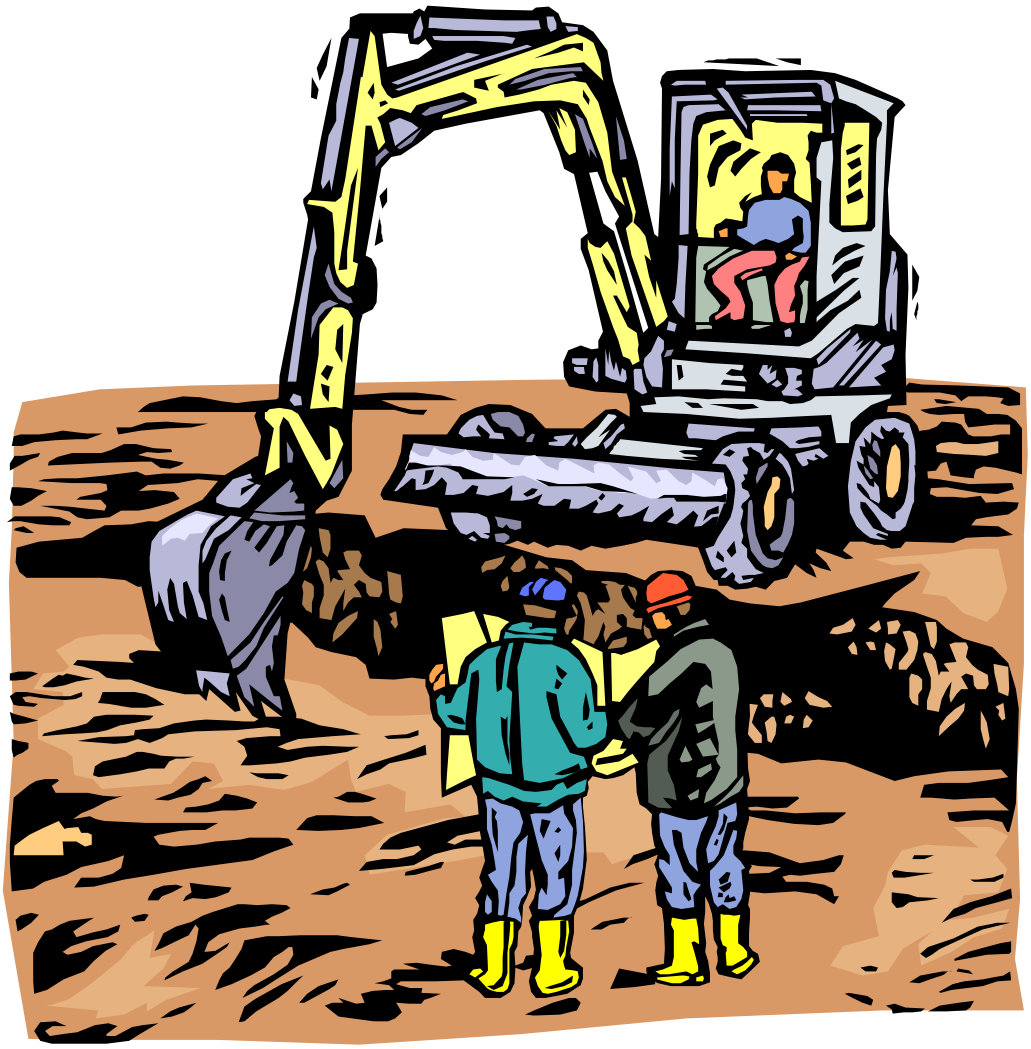

DEPARTMENT OF CONSUMER & BUSINESS SERVICES

Presented by the Public Education Section
Oregon OSHA
Department of Consumer and Business Services

Oregon OSHA
PUBLIC EDUCATION

0602-05

Oregon OSHA Public Education Mission:

We provide knowledge and tools to advance
self-sufficiency in workplace safety and health

Consultative Services:

- Offers no-cost on-site assistance to help Oregon employers recognize and correct safety and health problems

Enforcement:

- Inspects places of employment for occupational safety and health rule violations and investigates complaints and accidents

Public Education and Conferences:

- Presents educational opportunities to employers and employees on a variety of safety and health topics throughout the state

Standards and Technical Resources:

- Develops, interprets, and provides technical advice on safety and health standards
- Publishes booklets, pamphlets, and other materials to assist in the implementation of safety and health rules

Questions?
Call us

Field Offices:

Portland	503-229-5910
Salem	503-378-3274
Eugene	541-686-7562
Medford	541-776-6030
Bend	541-388-6066
Pendleton	541-276-2353

Salem Central Office:
Toll Free number in English: 800-922-2689
Toll Free number in Spanish: 800-843-8086
Web site: www.orosha.org

Welcome!

Studies show that excavation work is one of the most hazardous types of work done in the construction industry. Injuries from excavation work tend to be of a very serious nature and often result in fatalities.

The primary concern in excavation-related work is a cave-in. Cave-ins are much more likely to be fatal to the employees involved than other construction-related accidents.

OSHA has emphasized the importance of excavation safety through outreach and inspection efforts based upon data which clearly establishes the significant risk to employees working in and around excavations. Furthermore, a high rate of injuries has continued to occur in and around excavations.

So, with that information in mind, our **goals** for today are to:

- Overview Division 3/Subdivision P *Excavations*
- Define important terms including Competent Person
- Discuss specific hazards resulting from excavation work
- Describe requirements for protective systems
- Review OSHA's soil classification methods

So, let's dig in!

Please Note: This material, or any other material used to inform employers of compliance requirements of Oregon OSHA standards through simplification of the regulations should not be considered a substitute for any provisions of the Occupational Safety and Health Act or for any standards issued by Oregon OSHA. This workbook is intended for classroom use only.

Scope, Application, Definitions
{Division 3/Subdivision P 29 CFR 1926.650}

Scope and Application

This subpart applies to all excavations made in the earth's surface. Excavations are defined to include trenches.

Some KEY Definitions:

Competent Person means one who is capable of identifying existing and predictable hazards in the surroundings, or working conditions which are unsanitary, hazardous, or dangerous to employees, and who has authorization to take prompt corrective measures to eliminate them.

Protective System means a method of protecting employees from cave-ins, from material that could fall or roll from an excavation face or into an excavation, or from the collapse of adjacent structures. Protective systems include support systems, sloping and benching systems, shield systems, and other systems that provide the necessary protection.

Registered Professional Engineer means a person who is registered as a professional engineer in the state where the work is to be performed. However, a professional engineer, registered in any state is deemed to be a “registered professional engineer” within the meaning of this standard when approving designs for “manufactured protective systems” or “tabulated data” to be used in interstate commerce.

Support System means a structure such as underpinning, bracing, or shoring, which provides support to an adjacent structure, underground installation, or the sides of an excavation.

Tabulated Data means tables and charts approved by a registered professional engineer and used to design and construct a protective system.

Trench (Trench excavation) means a narrow excavation (in relation to its length) made below the surface of the ground. In general, the depth is greater than the width, but the width of a trench (measured at the bottom) is not greater than 15 feet.

Preplanning Against Cave-Ins

One of the most important steps in avoiding cave-ins is the preplanning of excavation operations. Some of the questions that must be answered prior to digging are:

1. What types of soil will be found?
2. What are the soil moisture conditions?
3. Has the soil previously been disturbed?
4. How large will the excavation be?
5. How long will the excavation be open?
6. What kinds of weather can we expect?
7. What kinds of equipment will be on the job?
8. Will the excavation be near structures?
9. Is traffic control needed near the excavation?
10. What sources of vibration will be nearby?
11. Will water be a problem?
12. What kind of shoring? How much?
13. Underground installations?

General Requirements
{Division 3/Subdivision P 29 CFR 1926.651}

Underground Installations [29 CFR 1926.651(b)]

- Determine the estimated locations
- Contact the utility or owner
- Proceed cautiously
- Find the exact location
- Support, protect, or appropriately remove the installation in open excavations

Surface Encumbrances [29 CFR 1926.651(a)]

- Remove or support if creating a hazard to workers

What are some examples of surface encumbrances?

poles _____ *rocks* _____ *trees* _____

Access and Egress [29 CFR 1926.651(c)]

(1) Structural ramps used for access or egress of equipment must be designed by a competent person qualified in structural design.

(2) A **safe means** of entering and leaving excavations must be provided for workers. A stairway, ladder, ramp, or other of egress must be located in trench excavations

- **four** feet or more in depth, and
- require no more than **25** feet of lateral travel.

Speed Shore Corp.

General Requirements
{Division 3/Subdivision P 29 CFR 1926.651}

Exposure To Vehicular Traffic [29 CFR 1926.651(d)]

Employees must be provided and wear warning vests or other suitable garments marked with or made of reflectrorized or high visibility material.

Exposure To Falling Loads [29 CFR 1926.651(e)]

Employees are not allowed under loads handled by lifting or digging equipment. Workers must either stand away or otherwise be protected from any vehicle being loaded or unloaded to avoid spilling or falling material.

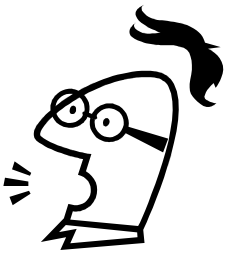

Warning System for Mobile Equipment [29 CFR 1926.651(f)]

A warning system must be utilized when mobile equipment is operated adjacent to an excavation, or when such equipment is required to approach the edge of an excavation, ***and the operator does not have clear and direct view of the edge.*** Barricades, hand or mechanical signals, or stop logs can be used.

Hazardous Atmospheres

[29 CFR 1926.651(g)]

Purpose

Prevent exposure to harmful levels of air contaminants such as:

- Oxygen deficiency,
- Explosives/Flammables,
- Toxins;

and to assure acceptable atmospheric conditions through:

- Atmospheric testing,
- Removal of the substance,
- Proper ventilation,
- Respiratory protection,
- etc.

Testing and Controls

Testing is required where oxygen deficiency (less than 19.5 percent oxygen), or a hazardous atmosphere exists or could reasonably be expected to exist.

Examples include excavations in landfill areas or in locations where hazardous substances exist (i.e. utilities, tanks, contaminated soil, etc.)

When controls such as ventilation are used to reduce the level of atmospheric contaminants to an acceptable level, testing must be conducted as often as necessary to ensure continuing safety.

Emergency Rescue Equipment

Emergency rescue equipment must be readily available where hazardous atmospheric conditions exist or can reasonably be expected to develop.

NOTE: Division 3/Subdivisions D & E provide additional requirements. Additionally, workers entering bell-bottom piers or other similar deep and confined footing excavations must utilize a harness and lifeline system.

General Requirements
{Division 3/Subdivision P 29 CFR 1926.651}

Water Accumulation [29 CFR 1926.651(h)]

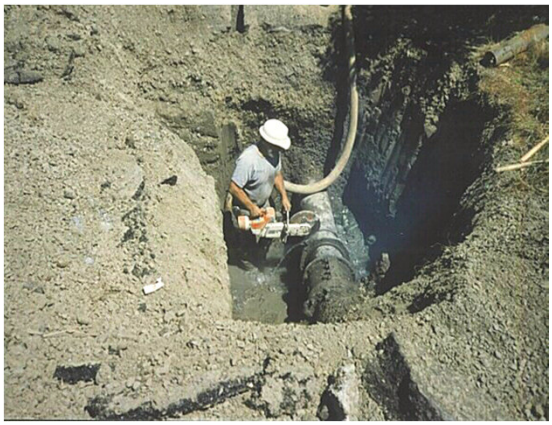

Employees must be properly protected when working in excavations where water has accumulated or is accumulating. Precautions will vary with each situation but may include diversion, dewatering (well pointing) systems, special supporting systems, or water removal equipment. The competent person must monitor water removal equipment.

Water is one of the major concerns during excavation operations. The action of water in excavations can cause undermining and cave-ins.

Stability of Adjacent Structures [29 CFR 1926.651(i)]

Where the stability of adjacent buildings, walls, or other structures is endangered by excavation operations, support systems such as shoring, bracing, or underpinning must be provided to ensure stability.

Excavation below the level of the base or footing that could pose a hazard is not permitted except when:

- the excavation is in stable rock, or
- support system (underpinning) is provided, or
- Registered Professional Engineer approves.

Sidewalks, pavements, and appurtenant structure must not be undermined unless a support system or another method of protection is provided to protect employees from collapse.

General Requirements
{Division 3/Subdivision P 29 CFR 1926.651}

Daily Inspections [29 CFR 1926.651(k)]

Daily inspections of excavations, adjacent areas, and protective systems must be made by a Competent Person for evidence of a situation that could result in possible cave-ins, failure of protective systems, hazardous atmospheres, or other hazardous conditions.

When? 1._____ 2._____ 3._____

What are we inspecting?

If evidence of a possible cave-in, failure in the protective system, hazardous atmosphere, or other significant concerns are found, all affected workers must be removed from the hazardous exposure until rendered safe.

Protection from Loose Rock or Soil [29 CFR 1926.651(j)]

Scale back to remove loose material or install protective barricades and place all material and equipment at least **two** feet from the edge.

Fall Protection [29 CFR 1926.651(l)]

Walkways must be provided where employees or equipment are permitted to cross over excavations.

Adequate barrier physical protection must be provided at all remotely located excavations. All wells, pits, shafts, etc., must be barricaded or covered. Backfill as soon as possible.

Soil Classification System
{Division 3/Subdivision P Appendix A}

Scope

Appendix A describes a method of classifying soil and rock deposits based on site and environmental conditions, and on the structure and composition of the earth deposits. This appendix contains definitions, sets forth requirements, and describes acceptable visual and manual tests for use in classifying soils.

Key Definitions:

Cohesive Soil means clay, or soil with a high clay content, which has cohesive strength. Cohesive soil does not crumble, can be excavated with vertical sideslopes, and is plastic when moist. Cohesive soil is hard to break up when dry and exhibits significant cohesion when submerged.

Fissured means a soil material that has a tendency to break along definite planes of fracture with little resistance, or a material that exhibits open cracks, such as tension cracks, in an exposed surface.

Granular means gravel, sand, or silt, (coarse grained soil) with little or no clay content. Granular soil has no cohesive strength, cannot be molded when moist, and crumbles easily when dry. Some moist granular soils exhibit apparent cohesion.

Type A means cohesive soils with an unconfined compressive strength of 1.5 tons per square foot (tsf) or greater. Examples of cohesive soils are: clay, silty clay, sandy clay, clay loam, and, in some cases, silty clay loam and sandy clay loam. Cemented soils such as hardpan are also considered Type A. No soil can be Type A if fissured, subjected to significant vibration, or has been previously disturbed. *Refer to the definition in Appendix A for further criteria.*

Type B means cohesive soils with an unconfined compressive strength greater than 0.5 tsf but less than 1.5 tsf. Some examples are: granular cohesionless soils including angular gravel, silt, silt loam, sandy loam, and ,in some cases, silty clay loam and sandy clay loam. Type B also includes previously disturbed soils except those which would otherwise be classed as Type C.

Type C means cohesive soils with an unconfined compressive strength of 0.5 tsf or less. Some examples include: gravel, sand, and loamy sand. Also included may be submerged soil or soil from which water is freely seeping, and submerged rock that is not stable.

Soil Classification System
{Division 3/Subdivision P Appendix A}

Classification of Soil and Rock Deposits

- Classification must be based on the results of at least one visual and one manual analysis conducted by a Competent Person.
- *In a layered soil system, the system must be classified in accordance with its weakest layer. However, each layer may be classified individually where a more stable soil lies under a less stable soil.*

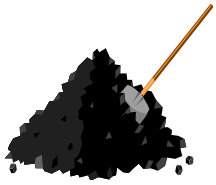

Visual Tests

Observe samples of soil that are excavated and soil in the sides of the excavation. Estimate the range of particle sizes and the relative amounts of the particle sizes. Soil that is primarily composed of fine-grained material is cohesive material. Soil composed primarily of coarse-grained sand or gravel is granular material.

Observe soil as it is excavated. Soil that remains in clumps when excavated is cohesive. Soil that breaks up easily and does not stay in clumps is granular.

Observe the side of the opened excavation and the surface area adjacent to the excavation. Crack-like openings such as tension cracks could indicate fissured material. If chunks of soil spill off a vertical side, the soil could be fissured. Small spills indicate moving ground and can pose potentially hazardous situations.

Observe the area adjacent to the excavation to identify previously disturbed soil (i.e. evidence of existing utility and other underground structures).

Observe the opened side of the excavation to identify layered systems. Examine layered systems to identify if the layers slope toward the excavation. Estimate the degree of slope of the layers.

Observe the area adjacent to the excavation and the sides of the opened excavation for evidence of surface water, water seeping from the sides, or the location of the water table level.

Observe the area adjacent to the excavation and the area within the excavation for sources of vibration that may affect the stability of the excavation face.

Soil Classification System
{Division 3/Subdivision P Appendix A}

Manual Tests

Plasticity and Pat Test - Mold a moist or wet sample of soil into a ball and attempt to roll it into threads as thin as 1/8 inch in diameter. Cohesive soil can be successfully rolled into threads without crumbling. If at least a 2 inch length of 1/8 inch thread can be held on one end without tearing, the soil is cohesive.

Spread a 1/8 or 1/4 inch thick sample of wet soil on the palm of the hand. Wipe the surface of the sample with a finger to remove visible water. With the palm facing up, slap the back of the hand moderately 5 to 10 times. If water rises to the surface of the sample (surface will appear shiny), then the soil is mostly cohesionless silt or sand. If no water appears, then the soil is mostly cohesive clay.

Dry Strength - Granular soil, when dry, crumbles on its own or with moderate pressure into individual grains or powder. Soils with clay content, when dry, crumbles into clumps which break up into smaller clumps but the smaller clumps can only be broken with significant force. If the dry soil breaks into clumps which do not break up into small clumps and which can only be broken with difficulty, and there is no visual indication the soil is fissured, the soil may be considered unfissured.

Thumb Penetration - The thumb penetration test can be used to estimate the unconfined compressive strength of cohesive soils. This test should be conducted on an undisturbed soil sample as soon as practical after excavating to reduce the chance of air drying the sample. If later the trench is exposed to moisture (rain, flooding, etc.), the soil classification must also be changed.

Type A soils can be readily indented by the thumb. However, they can be penetrated by the thumb only with very great effort.

Type C soils can be easily penetrated several inches by the thumb and can be molded by light finger pressure.

Other Strength Tests Estimates of unconfined compressive strength of soils can also be obtained by use of a pocket penetrometer or a hand-operated shearvane.

Other tests can include drying and sedimentation.

Requirements for Protective Systems
{Division 3/Subdivision P 29 CFR 1926.652}

Protective Systems [29 CFR 1926.652(a)]

Employees in excavations must be protected from cave-ins by an adequate protective system except when:

- excavations are made entirely in stable rock; or
- excavations are less than 5 feet deep **and** a Competent Person determines there is no indication of a potential cave-in.

Stable Rock *means natural solid mineral material that can be excavated with vertical sides and will remain intact while exposed. Unstable rock is considered to be stable when the rock material on the side or sides of the excavation is secured against caving-in or movement by rock bolts or by another protective system that has been designed by a registered professional engineer.*

Selection of Protective Systems

Protective systems must have the capacity to resist all loads without failure.

Protective systems are divided into two categories:

- Sloping and benching systems
- Support systems, shield systems, and other protective systems

The use of either of these two categories of protective systems requires the choice of one of four design options.

NOTE: Protective systems for excavations over 20 feet in depth must be designed by a registered professional engineer.

Speed Shore Corp.

Requirements for Protective Systems
{Division 3/Subdivision P 29 CFR 1926.652}

Sloping and Benching Options [29 CFR 1926.652(b)]

The four options include:

1. Sloped no steeper than 1 1/2:1 (34 degrees); or
2. Maximum allowable slopes and configurations per Appendix A & B; or
3. Designs using other tabulated data; or
4. Design by a registered professional engineer.

Option 1 allows excavations sloped at an angle no steeper than 1 1/2:1 (34 degrees).

- This sloping option must be in accordance with the configurations shown for Type C soil in Appendix B (sloping & benching).

Option 2 allows sloping and configurations in accordance with the conditions and requirements in Appendix A (soils) and Appendix B (sloping & benching).

Soil or Rock Type	Maximum allowable slopes for Excavations Less than 20 feet deep.
Stable Rock	*Vertical (90 degrees)*
Type A	*3/4 : 1 (53 degrees)*
Type B	*1 : 1 (45 degrees)*
Type C	*1 1/2 : 1 (34 degrees)*

Option 3 allows designs of sloping or benching systems from other tabulated data.

- Must identify the parameters effecting the selection of the slope or bench system, limitations, and any other necessary explanatory information aiding the user in selecting correctly.
- Must be kept on the jobsite during construction of the system.

Option 4 allows approval from a registered professional engineer.

- Must include the same criteria as described above in Option 3.

Requirements for Protective Systems
{Division 3/Subdivision P 29 CFR 1926.652}

Support, Shield, and other Protective System Options [29 CFR 1926.652(c)]

The four options include:

1. Designs using Appendix A and Appendix C or Appendix D; or
2. Designs using manufacturer's tabulated data; or
3. Designs using other tabulated data; or
4. Design by a registered professional engineer.

Option 1 allows the use of Appendices A **and** C, or D.

- Appendix A is soil classification
- Appendix C is timber shoring
- Appendix D is aluminum hydraulic shoring

Option 2 allows the use of manufacturer's tabulated data.

- Must be in accordance with all manufacturer's specifications, recommendations, and limitations. Deviations can only be approved by the manufacturer.
- Data must be in writing and kept at the jobsite during construction of the protective system.

Option 3 allows the use of *other* tabulated data.

- Must identify the parameters effecting the selection, limitations, and any other necessary explanatory information aiding the user in selecting correctly.
- Must be kept at the jobsite during construction of the protective system.

Option 4 allows approval from a registered professional engineer.

- The design must be in writing and kept at the jobsite during construction of the system.

Requirements for Protective Systems
{Division 3/Subdivision P 29 CFR 1926.652}

Materials & Equipment [29 CFR 1926.652(d)]

- Materials and equipment used for protective systems must be free from damage or defects that might impair their proper function.
- Manufactured materials and equipment used for protective systems must be used and maintained in a manner that is consistent with manufacturer specifications.
- A Competent Person shall examine damaged material or equipment to evaluate its suitability for continued use.

Installation and Removal [29 CFR 1926.652(e)]

- Support system members are to be securely connected to prevent sliding, falling, kickouts, or other predictable failures.
- Installation should begin at the top and progress to the bottom of the excavation. Removal shall begin at the bottom and progress to the top.
- Members shall be released slowly so as to note any indication of possible failure of the system or the excavation.
- Backfilling shall progress together with the removal of support systems.

Trench Support [29 CFR 1926.652(e)(2) & (g)(2)]

- Material may be dug to a level no more than 2 feet below the bottom members of a support system <u>if</u> the system is designed to resist the forces calculated to the full depth of the trench, and there is no indication of soil loss from behind or below the bottom of the support system.

Sloping/Benching [29 CFR 1926.652(f)]

- Employees may not work on the faces of slopes or benches above other workers unless the workers at the lower level are protected from the hazard of falling, rolling, or sliding material or equipment.

Shield System [29 CFR 1926.652(g)]

- Shields shall be installed in a way that will restrict lateral or other hazardous movement of the shield in the event of sudden lateral pressures.

Reference

Excavation Work in Construction (NIOSH)

Trenching and Excavation: Safety Principles (The Ohio State University)

Preventing Injuries When Working with Hydraulic Excavators and Backhoe Loaders (NIOSH)

Hazards of Inadequately Securing Hydraulic Excavator Buckets When Using Quick Coupling Devices (OSHA)

Hazards Associated with Striking Underground Gas Lines (OSHA)

Division 3/Sub Division P - Excavations

Excavation Work in Construction

A total of 488 fatalities were studied between 1992 and 2000

- average of 54 fatalities annually
- 46% (225) occurred in small firms with 10 or fewer workers
- 68% (334) occurred in firms with fewer than 50 workers

These statistics demonstrate that fatalities associated with trench collapses and other excavation hazards continue to occur in alarming numbers despite regulations and consensus standards which describe engineering controls, protective equipment, and safe work practices to minimize hazards for workers.

In the United States, evidence suggests that these standards have had the greatest effect in preventing injuries and fatalities in larger construction firms (>20 workers). Smaller firms performing trenching and excavation may not be as familiar with the relevant occupational safety and health standards or may lack resources and personnel to implement controls and oversee conditions and work practices at the construction site.

Recent press releases throughout the United States:

Trench collapse fatality probed (01/01/03 Michigan): William C. Amolsch, 43, was working in a 15-foot (4.6 m) hole when the trench walls collapsed. An autopsy found that Amolsch died from a blunt-force injury to his head.

Trench collapse (01/03/03 West Virginia): Robert Blevins, 44, died after being buried under several feet of dirt, mud, and rock in a trench that collapsed as he was replacing a ruptured city sewer line.

Trench collapse kills construction worker; Portland man was working on underground utility line (01/07/03 Michigan): Arthur Krass, 43, was installing plumbing in a 15-foot (4.6 m) trench when the dirt walls collapsed. Rescuers dug for three hours until they could find the body of the victim.

Worker, 19, is injured when trench collapses around him (01/27/03 Illinois): A 19-year-old worker survived being buried for about 20 minutes in a trench which collapsed as he and others were installing sewer line.

Work site cave-in kills two brothers (01/28/03 South Carolina): Rigobeto Xaca Sandoval, 22, and Moises Xaca Sandoval, 22, probably died instantly, their skulls crushed by the soil that buried them. They were in what appeared to be an 8-foot (2.4 m) deep, 2-foot (0.6 m) wide trench installing an electrical conduit when the trench collapsed. The brothers spoke little, if any, English.

Cave-in kills worker in southern Overland Park (03/17/03 Kansas): A waterproofing worker died when a cave-in pinned him against the basement foundation of a home under construction. Two other workers were hurt in the collapse, but they were able to pull themselves out of the dirt.

Excavation Work in Construction

Recent press releases throughout the United States (con't):

Officials still seek trench collapse cause (04/22/03 Maryland): Antonio Loverde and Chris Milan had finished digging a 16-foot (4.9 m) long trench and were standing on its banks when the edge gave way. Both workers survived after being dug out, but one required treatment for injuries to his hip, thigh, knee, and ankle.

Man trapped underground by cave-in (05/01/03 Oklahoma): Marvin Young, 30, was helping connect a new sewer line in a 12-foot (3.7 m) deep by 6-foot (1.8 m) wide trench which began to cave-in, trapping him beneath 9-10 feet (3 m) of dirt. Rescue workers used hand shovels and could only remove small buckets of dirt at a time or risk another collapse. It took nearly 5 hours to retrieve his body.

Cave-in victim was deep in trench (05/28/03 California): Mark Owens, 31, died after a 14-foot (4.3 m) deep trench collapsed on him as he was trying to retrieve a pump at the bottom of the ditch. Rescuers took 10 hours to retrieve his body beneath the tons of dirt and decomposed granite that buried him.

Worker killed in trench collapse at construction site (05/29/03 Wisconsin): Dewayne H. Spiller, 26, was extending sewer and water lines in a trench when the walls collapsed and buried him up to his chest. The pressure of the dirt caused him to suffocate within about 30 minutes, and it took another 50 minutes to remove the body.

Worker found dead after trench collapses (06/02/03 Texas): A construction crew installing water lines in a 20-foot (6.1 m) deep trench was about to quit for the day when one of the workers went back into the trench. The trench collapsed and buried him underneath 8 feet (2.4 m) of dirt. Because rescuers had to work carefully to prevent another collapse, it took nearly 10 hours to retrieve the body.

A closer look at the 488 fatalities studied between 1992-2000

- 94% (458) of the fatalities involved workers in privately-owned companies
- 6% (30) of the fatalities were government workers

- 46% (225) of the companies involved had fewer than 11 employees
- 68% (334) of the companies involved had fewer than 50 employees

- average length of employment with their current employer at the time of their death was 4.6 years
- 17% (85) of the victims had been with their current employer less than one year

Excavation Work in Construction

Fatalities by Industry

- Water, sewer, pipeline, and communications and power line construction (SIC 1623) represented 24.2% (118)
- Excavation work (SIC 1794) represented 23.2% (113)

Fatalities by Occupation

- Construction laborers accounted for 44.3% (216)
- Plumbers/pipe fitters accounted for 7.8% (38)
- Construction trades, n.e.c. accounted for 6.4% (31)
- Excavation machine operators accounted for 6.1% (30)

Fatalities by Event

- Excavation/trenching cave-in accounted for 77.1% (376)
- Struck by object accounted for 6.1% (30)
- Pedestrian struck by vehicle/equipment accounted for 4.1% (20)
- Caught in or compressed by equipment/object accounted for 3.1% (15)
- All other events accounted for 9.6%

Although fatalities from trench collapses have declined since OSHA's 29 CFR 1926 Subpart P *Excavations* standard was revised in 1989, the data above show that fatalities in construction continue to occur during excavation and trench work.

Extensive resources are available to inform, educate, and promote best practices in preventing fatalities and severe injuries from working in and around excavations. The following list offers some considerations:

- ✓ The National Institute of Occupational Safety & Health (NIOSH) www.cdc.gov/niosh
- ✓ Occupational Safety & Health Administration (OSHA) www.osha.gov
- ✓ Oregon Occupational Safety & Health Administration (OR-OSHA) www.orosha.org
- ✓ Building Science Dept. Auburn University – www.trenchsafety.org
- ✓ Worker's Compensation Insurance Carriers
- ✓ Equipment Manufacturers/Distributors
- ✓ Equipment Rental Companies
- ✓ Trade Unions
- ✓ Employer Associations
- ✓ Trade Organizations
- ✓ Underground Utility Notification Services
  Utility Notification Center for Oregon, Washington, and Montana
  www.callbeforeyoudig.org *1-800-332-2344 (Oregon)*
- ✓ Private Consultants
- ✓ Public Utilities
- ✓ Contractors

Excavation Work in Construction

Acknowledgements
T.J. Lentz, D.M. Votaw, National Institute for Occupational Safety and Health, Robert A. Taft Laboratories, Cincinnati, Ohio, U.S.A. Also, the efforts of the following NIOSH colleagues who helped study this topic: Stephanie Pratt, Patrick Coleman, Kitty Hendricks, Carolyn Guglielmo, and Matt Gillen.

References

Press references available upon request.
Bureau of Labor Statistics [2002]. Census of fatal occupational injuries. Washington, DC: U.S. Department of Labor.
NIOSH [2003]. Fatality Assessment and Control Evaluation Program.
http://www.cdc.gov/niosh/face/faceweb.html .
Suruda A, Whitaker B, Bloswick D, Phillips P, Sesek R [2002]. Impact of the OSHA trench and excavation standard on fatal injury in the construction industry. Journal of Occupational and Environmental Medicine 44(10):902-905.

ohioline.ag.ohio-state.edu -- your Link to Information, News, and Education

THE OHIO STATE UNIVERSITY FactSheet Extension

Ohio State University Extension Fact Sheet

Food, Agricultural and Biological Engineering

590 Woody Hayes Dr., Columbus, Ohio 43210

Trenching and Excavation: Safety Principles

AEX-391-92

Larry C. Brown
Kent L. Kramer
Thomas L. Bean
Timothy J. Lawrence

Trenching and excavation procedures are performed thousands of times a day across the United States. Unfortunately, about 60 people are killed in trenching accidents each year. Contractors and construction laborers should understand the laws and regulations applicable to trenching and excavation occupations. These statutes are in effect for the express purpose of protecting those who work in trenching and excavation situations. Although farmers are generally exempt from the state trenching and excavation statutes, they may still be held liable for accidents and loss of life resulting from trenching and excavation activities conducted under their direction.

This publication provides Ohio's construction contractors, laborers and farmers with an overview of soil mechanics relating to trench and excavation failures, and of Ohio's trenching and excavation laws. It is not intended to provide the reader a strict legal interpretation, but to increase his/her awareness of excavation and trench safety, and provide guidance on where to obtain more information.

Soil Mechanics

In trenching and excavation practices, "soil" is defined as any material removed from the ground to form a hole, trench or cavity for the purpose of working below the earth's surface. This material is most often weathered rock and humus known as clays, silts and loams, but also can be gravel, sand and rock. It is necessary to know the characteristics of the soil at the particular job site. Soils information is used by contractors and engineers who are trained to identify the proper safety protective devices or procedures needed for each situation. (The U.S. Department of Labor's Office of Occupational Safety and Health Administration, OSHA, stresses the need for a "competent person" to be in charge of all excavation and trenching activities at a job site.) Soil scientists and geotechnical specialists can be helpful in identifying and characterizing soil materials.

Contact your county Soil Conservation Service office for a list of soil scientists in your area, and/or consult the telephone Yellow Pages under the heading of "engineers" with the specialty of "geotechnical" and/or "soils."

Soil is an extremely heavy material, and may weigh more than 100 pounds per cubic foot (pcf). A cubic yard of soil (3 ft x 3 ft x 3 ft), which contains 27 cubic feet of material, may weigh more than 2,700 pounds (lbs). That is nearly one and a half tons (the equivalent weight of a car) in a space less than the size of the average office desk. Furthermore, wet soil, rocky soil or rock is usually heavier. The human body cannot support such heavy loads without being injured.

From a soil mechanics point of view, one can visualize the soil as a series of multiple columns of soil blocks, with the blocks piled one on top of the other. In the soil column shown in Figure 1, each soil block measures one foot square, weighs approximately 100 lbs, and supports the weight of all of the blocks above. This means that a block sitting at a five-foot depth supports its own weight and the combined weight of the four blocks resting on it. The combined weight of this column is 500 lbs spread over a one-square-foot area; 500 pounds per square foot (psf). This five-block column constitutes a 500-pound force exerted vertically on whatever lies below.

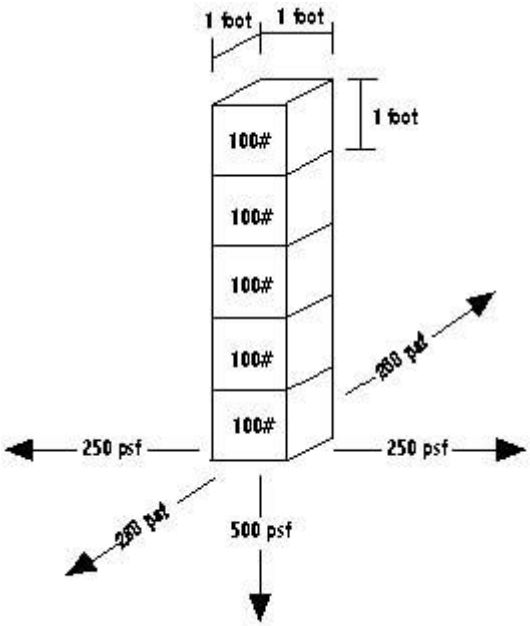

Figure 1. Forces exerted by a column of soil (abstracted from Mickle, 1991).

A column of soil exerts not only a vertical force, but also a horizontal force in all outward directions. The outward force is equal to one-half the vertical force. For example, the five-block column illustrated in Figure 1 has a downward vertical force of 500 lbs at the base of soil block number five. The horizontal force pushing out from the base of that same block is half of 500 lbs, or 250 lbs, in all outward directions. As the weight of the column increases, the soil blocks at the bottom of the column theoretically have a tendency to compress and spread outward. In undisturbed soil conditions, this process is stopped by the presence of the surrounding columns pushing back with equal pressure. These hypothetical columns press against each other, maintaining an equilibrium. Therefore, the horizontal pressures of all the columns are balanced, producing a stable relationship.

Trench Failure

When a trench is excavated, the stable relationship described in the previous section no longer exists (see Figure 2). The horizontal pressure on the soil blocks along the trench wall is no longer in equilibrium, and a block may not be able to support its weight and the weight of any blocks above. At the point where the soil can no longer withstand the pressure, the wall will shear and break away from its stable position, as indicated in Figure 2a. The first failure occurs as the bottom of the wall moves into the trench (see Figure 2b). This movement creates an undercut area at the base of the trench as soil material along the wall falls into the trench. Often there is a second movement in which more of the wall material erodes. Finally, the erosion at the base of the trench leaves the upper part of the column supported only by cohesion to the columns around it (see Figure 2c), and more soil from the column will soon fall into the excavation (see Figure 2d). Many rescue attempts are unsuccessful because rescuers attempt to save victims before the second and third failures take place, often trapping the would-be rescuers along with the first victims.

Figure 2-e summarizes the three areas of failure in the trench wall as explained in the example above. In order of occurrence, soil in Area 1 at the base of the wall moves into the trench, and then is followed by the failure of Area 2. The failure of Areas 1 and 2 leave the remaining trench wall, Area 3, unsupported. Area 3 will break the cohesion and shear off the wall under its own weight and fall into the trench. Typically, time elapses between the failure of segments. It is the uncertainty of when the next failure will occur that makes rescue or recovery extremely hazardous. Time is a major consideration. The longer the trench is unsupported, the more potential there is for further trench collapse.

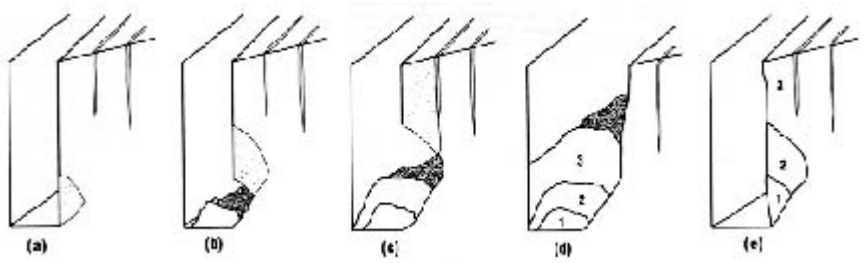

Figure 2. Mechanics of a trench failure (abstracted from Mickle, 1991).

Some employers and contractors believe that proper safety procedures waste valuable time and money, and that faster work creates larger profit margins. However, accidents that occur because safety precautions are not taken can be costly. In addition to the loss of human life, the possible financial costs of a trenching accident include: work stoppage to rescue the victim; additional time and labor to re-excavate the collapsed trench; workers compensation costs and increased insurance premiums; and additional paperwork resulting from the investigation of the accident. In some cases, fines are also imposed. For example, OSHA recently fined a contractor $232,000 after the death of a worker in a trench cave-in. Six company employees were in a 12-foot deep trench when it collapsed, killing one person and injuring another. OSHA determined that the trench was not properly supported. In another case, OSHA cited a company $580,000 for the alleged willful and serious violations of federal excavation standards. The combination of potential fines, loss of human life, personal lawsuits and poor public relations could mean the end of a successful business.

General Requirements

When performing trenching and excavation operations in Ohio, there are general precautions that should be considered before starting any work. Contact the Ohio Utility Protection Service, OUPS (1-800-362-2764), and the Oil and Gas Producers Protection Service (614-587-0486), to identify the location of any underground cables, pipes or utility installations in the area of the proposed excavation. Ohio law requires excavators to call OUPS two working days before breaking ground. Once these areas are located and marked, avoid them. When working in areas where there is a back-filled trench, or a railroad, highway, source of vibration or other unstable condition, take additional precautions to properly shore and brace the excavation. These precautions will help prevent cave-ins. Undercutting of exposed vertical faces is prohibited unless supported by one or more of the methods prescribed in the Ohio Administrative Code, Chapter 4121:1-3, for exposed faces of trenches. Place all excavated or fill materials a minimum of two feet away from the top edge of the trench. If materials need to be placed closer than two feet from the edge of the trench, install an effective barrier to prevent them from falling into the excavation.

The following is a summary of the trenching and excavation laws that apply in Ohio. (Consult the Ohio Administrative Code, Chapter 4121:1-3, directly for further details.)

Trenches

Exposed trench faces that are more than five feet high must be stabilized by either shoring, sloping the face of the wall back to a stable slope or some equivalent method to prevent cave-ins. (The definition of stable slope is based on soil properties as noted in the Ohio Administrative Code, Chapter 4121:1-3.) If the trench is excavated in hard, compact soil materials more than five feet in depth, the wall must be supported. If the walls of a trench are less than five feet deep and in soft or unstable soil materials, then trench boxes, shoring, sheeting, bracing, sloping or other equivalent methods are required to prevent the trench wall from collapsing. Trench walls above five feet in height may be sloped instead of shored.

Materials used for trench boxes, sheeting, sheet piling, bracing, shoring and underpinning should be in good condition, and should be installed so that they provide support that is effective to the bottom of the trench. Timber must be sound and free from large or loose knots. Vertical planks in the bracing system should be extended to an elevation no less than one foot above the top of the trench face.

When employees are required to be in trenches that are four feet or more in depth, an adequate means of exit, such as a ladder or steps, must be provided and located so that no more than 25 feet of lateral travel is required for a person to reach the exit structure. The trench should be braced and shored during excavation and before personnel are allowed entry. Cross braces and trench jacks should be secured in true horizontal positions and spaced vertically in order to prevent trench wall material from sliding, falling or otherwise moving into the trench. Portable trench boxes (also called sliding trench shields) or safety cages may be used to protect employees instead of shoring or bracing. When in use, these devices must be designed, constructed and maintained in a manner that will provide at least as much protection as shoring or bracing, and extended to a height of no less than six inches above the vertical face of the trench.

During the backfill operation, backfill and remove trench supports together, beginning at the bottom of the trench. Release jacks or braces slowly and, in unstable soil materials, use ropes to pull them from above after employees have left the trench.

Excavations

Excavation safety requirements are quite similar to trenching requirements. For excavations in which employees may be exposed to unstable ground, qualified personnel using practices that are compatible with standards required by a registered architect, a registered professional engineer or other duly licensed or recognized authority will design support systems such as piling, cribbing, bracing and shoring that meet accepted engineering requirements to contain the walls. Excavations with conditions such as water, silty materials, loose boulders, erosion, deep frost action or earth fracture planes require that the slope of the earth adjacent to the excavation be lessened. Scaling, benching, barricading, rock bolting, wire meshing or other equally effective means of excavation support must meet accepted engineering requirements for all sides, slopes and faces of excavations. Materials used to support excavations should be maintained in good condition.

Never excavate below the level of the base of the footing or retaining wall, except in hard rock, unless the wall is underpinned and appropriate precautions are taken to ensure the stability of adjacent walls. If it is necessary to place or operate power shovels, derricks, trucks, materials or other heavy objects on a level above and adjacent to an excavation, the side of the excavation must be sheet-piled, shored, braced or sloped as necessary to resist the additional pressure resulting from such loads. Install substantial stop logs or barricades when using mobile equipment on or near an excavation, grade away from the excavation, and provide walkways or bridges with standard guardrails for employees or equipment to cross over excavations.

Summary

This publication provides an overview of the basic soil mechanics of a trench failure, and Ohio and federal laws which regulate trenching and excavation activities. The actual laws applicable in Ohio can be found in Chapter 4121:1-3 of the Ohio Administrative Code, which can be obtained from larger public libraries, private law firms, the office of your county district attorney and OSHA offices. OSHA can provide manuals, drawings, etc., and all federal regulations and requirements. For more information, contact any of the following:
US Department of Labor-Occupational Safety and Health (OSHA) Ohio Office: Federal Building, 200 North High Street, Columbus, OH 43215 (614) 469-5582.
Region V Office: 230 South Dearborn Street, Room 3244, Chicago, IL 60624 (312) 353-2220.
Ohio Workers Compensation, Division of Safety and Hygiene, South-Central Regional Office, 6929 American Parkway, Reynoldsburg, OH 43068 (1-800-852-7464).
Ohio Land Improvement Contractors' Association (OLICA), Box 116, Dublin, OH 43017

Key Points

Identify the soil characteristics at the work site, and use this information to provide a safe work place for construction laborers.

Use prescribed methods of wall retention, piling, cribbing, sloping, shoring, trench boxing and sheeting to maintain trench and excavation walls. For each trenching or excavation situation, you should employ the proper sloping, shoring and bracing structures and measures designed specifically for the particular situation.

Trench failures often occur in multiples, starting with a movement of soil material near the bottom of the trench wall. After the failure of the base, the support of the wall will quickly erode and the wall will collapse. The collapsing soil is extremely heavy and can weigh one and a half tons per cubic yard, producing a tremendous crushing force.

Proper design, construction and placement of support structures will allow employees to work in a safe environment.

Bibliography

A Guide to Safety in Confined Spaces. 1987. DHHS (NIOSH) Publication No. 87-113. U.S. Department of Health and Human Services, Cincinnati, OH.

An Exploratory Analysis of Excavation Cave-in Fatalities. 1988. R.L. Stanevich and D.C. Middleton. Professional Safety, February, pp 24-27.

Development of Draft Construction Safety Standards for Excavation. 1983. R.L. Stanevich and F.Y. Yokel. NBS (NIOSH) Publication, NBSIR 83-2693; DHHS (NIOSH) Publication No. 83-103. U.S. Department of Commerce, Washington, DC; Department of Health and Human Services, Morgantown, WV.

Excavations. 1990 (Revised). Occupational Safety and Health Administration, U.S. Department of Labor, Washington, DC.

Occupational Safety and Health Standards-Excavations; Final Rule. October 31, 1989. Department of Labor. Federal Register, Part II. 29 CFR Part 1926.

Ohio Administrative Codes, 1991. Chapter 4121:1-3.

OSHA Up-to-Date. January 1992. [Newsletter citations]. National Safety Council, Chicago, IL 60611.

Request for Assistance in Preventing Deaths and Injuries from Excavation Cave-ins. July 1985. DHHS (NIOSH) Publication No. 85-110). U.S. Department of Health and Human Services, Cincinnati, OH.

Safety and Health Excavation and Trenching Operations. (undated) Order No. 689601. National Audio-Visual Center, National Archives and Records Administration, Capitol Heights, MD.

Sloping, Shoring and Shielding. (undated) Order No. 009863. National Audio-Visual Center, National Archives and Records Administration, Capitol Heights, MD.

Soil Classification for Construction Practice. 1979. F. Yokel. Report NBSIR 79-1945, U.S. Department of Commerce, Washington, DC.

The Mechanics of A Trench Cave-In. 1991. J.L. Mickle. Agri-book Magazine/Drainage Contractor, Vol:8-9.

Trenching. (undated) Order No. 007156. (Hazard recognition program). National Audio-Visual Center, National Archives and Records Administration, Capitol Heights, MD.

The Ohio Utilities Protection Law. 1990. T.L. Bean and L.C. Brown., AEX-316, Department of Agricultural Engineering, Cooperative Extension Service, The Ohio State University.

Acknowledgments

The authors gratefully acknowledge the assistance of Fred Galehouse, OLICA Contractor, Wayne County; Art Brate, USDA-Soil Conservation Service, Columbus; Tim St. Clair, Ohio Bureau of Workers Compensation-Division of Safety and Hygiene; Larry Trask, OLICA Executive Secretary; for the review of material in this publication. The authors also thank Michelle Wallingford, Undergraduate Assistant, Ronald Clason, Administrative Assistant, Department of Agricultural Engineering, for help in manuscript preparation, and Judy Kauffeld and Tonya Ewing, Section of Information, for graphic and editorial production.

Funding and support of this publication was provided through Grant Number U05/CCU506070-02, "Cooperative Agreement Program for Agricultural Health Promotion Systems," National Institute for Occupational Safety and Health, in cooperation with the Overholt Drainage Education and Research Program, Department of Agricultural Engineering, The Ohio State University.

NIOSH
Publication No. 2004-107

Preventing Injuries When Working with Hydraulic Excavators and Backhoe Loaders

Summary

Workers who operate or work near hydraulic excavators and backhoe loaders are at risk of being struck by the machine or its components or by excavator buckets that detach from the excavator stick. NIOSH recommends that injuries and deaths be prevented through training, proper installation and maintenance, work practices, and personal protective equipment.

Description of Exposure

A National Institute for Occupational Safety and Health (NIOSH) review of the Bureau of Labor Statistics (BLS) Census of Fatal Occupational Injuries (CFOI) data identified 346 deaths associated with excavators or backhoe loaders during 1992-2000 [NIOSH 2002]. Review of these data and of NIOSH Fatality Assessment and Control Evaluation (FACE) cases [NIOSH 2000, 2001] suggests two common causes of injury: (1) being struck by the moving machine, swinging booms, or other machine components; or (2) being struck by quick-disconnect excavator buckets that unexpectedly detach from the excavator stick. Other leading causes of fatalities are rollovers, electrocutions, and slides into trenches after cave-ins.

Case Study 1

A 28-year-old laborer died after he was struck by the bucket of a hydraulic excavator. The victim, a coworker, and the operator were using an excavator equipped with a quick-disconnect bucket to load concrete manhole sections onto a truck. The victim was on the ground to connect the manhole sections to the excavator while the coworker was on the truck to disconnect the sections after they had been loaded on the truck. The operator had positioned the excavator bucket near a manhole section while the victim attached a three-legged bridle to the manhole section for lifting. The bucket disconnected from the excavator stick (Figure 1) and struck the victim. He was pronounced dead at the scene [NIOSH 2001].

Case Study 2

A 32-year-old construction laborer died after being struck in the head by a backhoe bucket. The victim was part of a two-man crew clearing earth away from the foundation footing of a house. The backhoe operator began digging an approximately 2-ft-wide by 2-ft-deep excavation around the foundation while the victim used a hand shovel to remove extra earth after the backhoe had passed through. The amount of footing protruding was decreasing. The operator lowered the backhoe's bucket to rest on a pile of earth approximately 8 ft from the victim; he then dismounted from the backhoe to inspect the trench. When the operator returned to the machine and stepped over the tire to sit down, he inadvertently contacted the boom swing control, swinging the boom toward the victim standing in the trench. The boom struck the victim, pinning him against the house. He was pronounced dead at the scene [NIOSH 2000].

Figure 1. Quick-disconnect excavator bucket that detached from the excavator stick.

Controls

Employers should take the following steps to protect workers from injury while working with excavators or backhoe loaders.

Site Set-Up

- Contact local utilities and other responsible parties to locate overhead and underground utility lines before beginning work. Avoid working near overhead power lines. If you must work near them, develop a plan to avoid contact and to follow OSHA regulations for minimum clearance [29 CFR* 1926.550(a)(15)].
- Do not permit hydraulic excavators or backhoes to be operated on grades steeper than those specified by the manufacturer.
- Make sure that workers position machinery at a safe distance from excavations such as trenches.

Equipment Operators

- Train equipment operators in the proper use of the equipment they are assigned to operate. Be sure to follow manufacturers' specifications and recommendations.
- Continually evaluate safety programs to address changing conditions at the worksite.
- Clearly identify and label all machine controls and make sure that the manufacturers' safety features are working.
- Install and maintain equipment attachments and their operating systems according to manufacturers' specifications.
- Securely latch attachments (such as quick-disconnect buckets) before work begins.
- Follow the manufacturer's instructions for using positive locks on quick-disconnect equipment.
- Train operators to conduct visual and operational checks on all machine systems and operating controls before working the machine.
- Make frequent visual inspections of quick-disconnect systems—especially after changing attachments.
- Use the ROPS and seat belts supplied by the manufacturer. Do not remove the ROPS.
- Do not exceed load capacities when lifting materials.
- Instruct operators to lower the boom to a safe position with the bucket on the ground and turn off the machine before stepping off for any reason.

*Code of Federal Regulation. See CFR in reference

Other Site Workers

- Train site workers to recognize and avoid unsafe conditions and to follow required safe work practices that apply to their work environments.
- Make all workers on the site aware of the machines' established swing areas and blind spots before the operator works the machine. Keep workers on foot outside these areas by marking them with rope, tape, or other barriers.
- Before each work shift begins, review and confirm communications signals between machine operators and workers on foot.
- Instruct machine operators to keep the bucket as close to the ground as possible when workers are attaching loads for hoisting.

Other Site Workers (con't)

- Keep workers outside the hydraulic excavator swing areas and clear of attachments when using the machines for hoisting materials. Do not allow workers to stand under suspended loads or suspended machine components such as the boom, arm, or bucket.
- Do not permit workers on foot to approach the hydraulic excavator or backhoe loader until they signal the operator to shut down the machine and receive acknowledgment from the operator.
- Use spotters or signal persons around operating equipment when necessary.
- Never permit workers to ride in or work from excavator or backhoe loader buckets.
- Provide appropriate personal protective equipment and make sure that workers use and maintain it.

Acknowledgments

The principal contributors to this publication were Virgil J. Casini and Paul H. Moore, NIOSH Division of Safety Research, Morgantown, WV.

References

CFR. Code of Federal regulations. Washington, DC: U.S. Government Printing Office, Office of the Federal Register.

NIOSH [2000]. Construction laborer dies after being struck in the head by backhoe bucket—North Carolina. Cincinnati, OH: U.S. Department of Health and Human Services, Public Health Service, Centers for Disease Control and Prevention, National Institute for Occupational Safety and Health, DHHS (NIOSH) Publication No. FACE 2000-26.

NIOSH [2001]. Twenty-eight-year-old laborer dies after being struck by excavator bucket—North Carolina. Cincinnati, OH: U.S. Department of Health and Human Services, Public Health Service, Centers for Disease Control and Prevention, National Institute for Occupational Safety and Health, DHHS (NIOSH) Publication No. FACE 2001-09.

NIOSH [2002] Unpublished review of the Census of Fatal Occupational Injuries. Morgantown, WV: U.S. Department of Health and Human Services, Centers for Disease Control and Prevention, National Institute for Occupational Safety and Health.

The information in this document is based on data, FACE reports, and expert review. More information about the NIOSH FACE program is available at www.cdc.gov/niosh/face/faceweb.html

To receive more information about occupational safety and health topics, contact NIOSH at:

NIOSH Publications Dissemination
4676 Columbia Parkway
Cincinnati, OH 45226-1998
Telephone: 1-800-35-NIOSH (1-800-356-4674) or e-mail: pubstaft@cdc.gov

U. S. Department of Labor
Occupational Safety and Health Administration
Directorate of Enforcement Programs
Office of Health Enforcement

Hazards of Inadequately Securing Hydraulic Excavator Buckets When Using Quick Coupling Devices

Safety and Health Information Bulletin (SHIB 07-22-05)

Note: This Safety and Health Information Bulletin (SHIB) updates the "Revision of the Unintended Release of Buckets from Quick Couplers on Hydraulic Excavators" SHIB that was issued on August 26, 2004.

This Safety and Health Information Bulletin is not a standard or regulation, and it creates no new legal obligations. The Bulletin is advisory in nature, informational in content, and is intended to assist employers in providing a safe and healthful workplace. Pursuant to the Occupational Safety and Health Act, employers must comply with hazard-specific safety and health standards promulgated by OSHA or by a state with an OSHA-approved state plan. In addition, pursuant to Section 5(a)(1), the General Duty Clause of the Act, employers must provide their employees with a workplace free from recognized hazards likely to cause death or serious physical harm. Employers can be cited for violating the General Duty Clause if there is a recognized hazard and they do not take reasonable steps to prevent or abate the hazard. However, failure to implement any recommendations in this Safety and Health Information Bulletin is not, in itself, a violation of the General Duty Clause. Citations can only be based on standards, regulations, and the General Duty Clause.

Preface

Following a fatal accident caused by the unexpected release of an excavator bucket from a quick coupling device on a hydraulic excavator, the Occupational Safety and Health Administration (OSHA) reviewed its Integrated Management Information System (IMIS) accident data. The accident data revealed 15 incidents since January 1998 involving the unanticipated release of excavator buckets from quick couplers on hydraulic excavators. Eight workers died in these incidents. OSHA urges employers using quick couplers to inspect their quick couplers and take appropriate measures to prevent unintended bucket releases, which can result in death or serious injuries.

Purpose

The purpose of this Safety and Health Information Bulletin (SHIB) is to:

- Alert employers and employees of the need to follow manufacturer instructions regarding the installation, use, testing, inspection, and maintenance of quick coupling devices;

- Explain how buckets and other attachments can be unintentionally released from quick couplers; and
- Detail actions to prevent such unintended releases.

Background

The OSHA Madison, Wisconsin Area Office investigated a fatal accident where an excavator bucket was released unexpectedly from a quick coupler. OSHA's statistical database revealed fourteen additional incidents within the last six years involving the use of this type of equipment where excavator buckets unexpectedly released from quick couplers. Of the fifteen accidents reported by Federal and state OSHA offices, eight resulted in employee fatalities.

Accident Description

The accident prompting this Safety and Health Information Bulletin occurred at a site where a contractor was installing water mains and laterals. An excavation for a lateral had just been dug and an employee entered that lateral to prepare to install the pipe. The excavator operator changed buckets using a quick coupler on the hydraulic excavator. When the excavator was swung to continue digging on the main line, the bucket became detached from the quick coupler and rolled/slid into the lateral excavation, striking the employee and killing him. The investigation revealed that a locking pin had not been manually installed on this coupler to prevent accidental release of this attachment.

Quick Couplers

Most quick couplers are after-market devices that have been used on hydraulic excavators for several years and have steadily increased in popularity. They enable contractors to quickly make attachment changes on hydraulic excavators. Most quick couplers have a lifting eye to use for lifting material. (Figure 1).

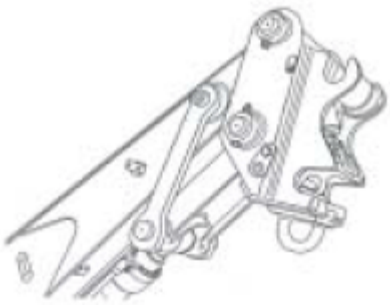

Figure 1

By removing the bucket (Figure 2), the lifting capacity of the excavator is increased by the weight of the bucket. Additionally, removal of the bucket improves the excavator operator's line of vision during lifting.

Figure 2

Many contractors like to use a large bucket to do the bulk of the digging and to then change to a smaller bucket for fine tuning and working in tight areas. The quick couplers also allow the operator to change from a bucket attachment to various other attachments. In most cases, the unexpected releases of buckets and other attachments are likely caused by the failure to properly engage and lock the quick couplers. (Figures 3 & 4).

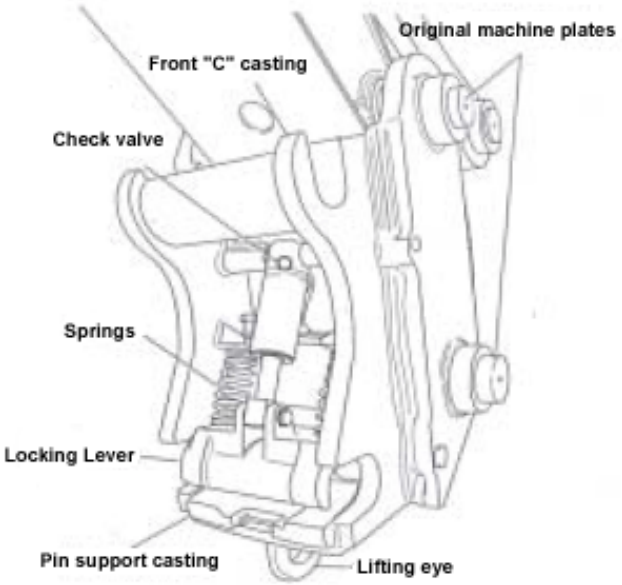

Figure 3

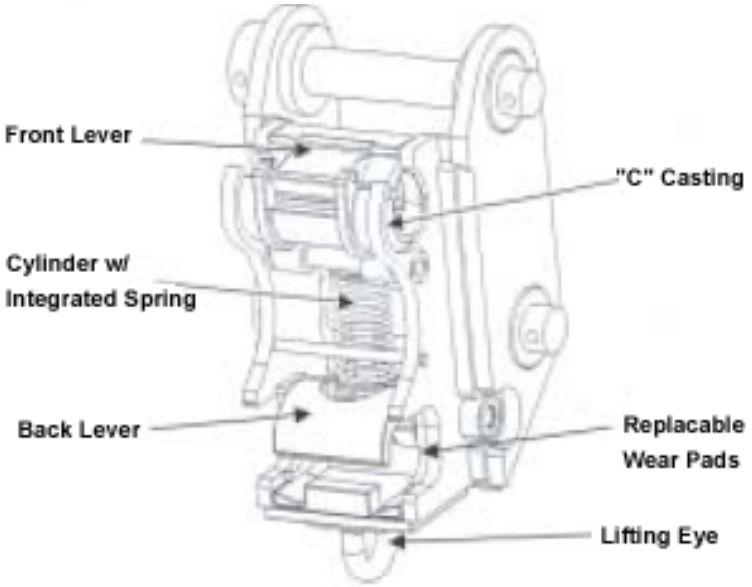

Figure 4

Other Information

Quick couplers are made by various manufacturers. Manufacturers of quick couplers have recognized the hazard of the bucket or other attachments being unexpectedly released from the quick couplers and, in many cases, have provided users with a retrofit locking pin (Figures 5 & 6) which is manually inserted behind the front lever (stick pin) or rear lever (link pin) of the couplers to prevent unintended releases.

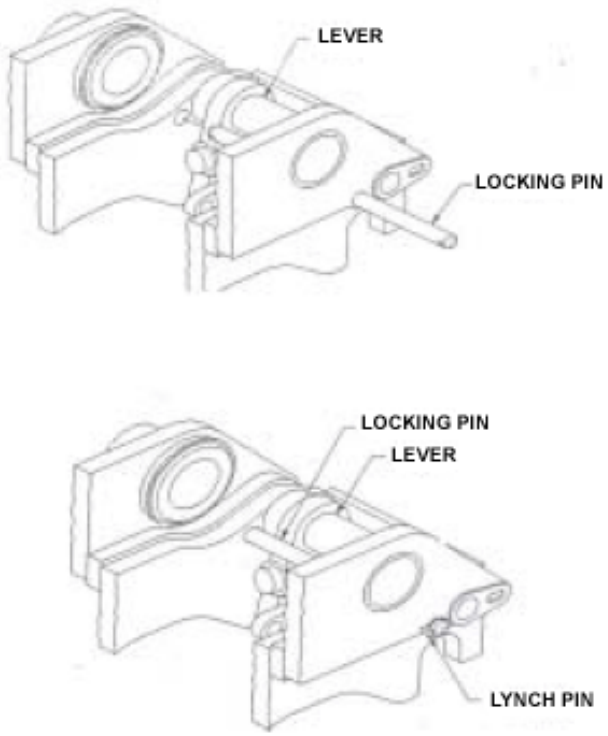

Figure 5

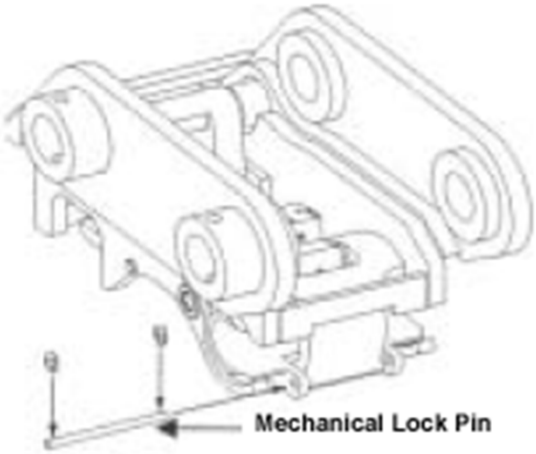

Figure 6

The National Institute for Occupational Safety and Health also has studied the hazards associated with hydraulic excavators and has issued DHHS Publication No. 2004-107 entitled, "Preventing Injuries When Working with Hydraulic Excavators and Backhoe Loaders". This publication addresses the hazard of excavator buckets being unintentionally detached from a quick disconnect mechanism.

Conclusions

Based upon experience, many manufacturers have retrofitted existing quick couplers, designed new and improved quick coupler systems, and developed safe use and operating procedures. Overall, these corrective actions have significantly decreased the probability of a bucket or other attachment being unintentionally released from a quick coupler. However, unintended releases of buckets and other attachments from quick couplers continue as evidenced by the fatal accident in Madison, Wisconsin and the IMIS accident data. Unintended releases appear to continue because: not all employers/ contractors who use quick couplers are aware of the hazard and of the manufacturers' corrective actions; some users fail to retrofit the quick coupler with locking pins; and/or some users have insufficient training on installation and testing procedures associated with the use of such couplers. Given the number of manufacturers and the diversity of quick coupling devices, employers using quick couplers should contact the manufacturer if they have questions regarding the reliability of the quick coupling devices, or to determine whether additional steps or modifications are recommended in order for employees to safely use a particular quick coupling device.

Safety Measures to Prevent Accidents

Employers using hydraulic excavators with quick coupling devices can protect employees from the unintended release of attachments by:

- Inspecting all quick couplers to determine if they are subject to unexpected release hazards. Determine whether a manually installed locking pin and installation procedures (or other retrofitting methods) have been provided by the manufacturer.
- If appropriate, obtaining and installing retrofits recommended by the manufacturer, including positive locking pins and other devices that need to be manually installed.
- Using an independent secondary system to retain the bucket/work tool from falling, in the event of a failure of the primary system. The secondary system can be manual or automatic with a verification procedure for the user to check for proper attachment.
- Considering the use of newer models of quick couplers that have been specifically designed to prevent the unintended release of attachments.
- Following the manufacturer's recommendations for maintenance and inspection of the quick coupler to prevent a malfunction of the quick coupler that could cause an unintended release of the attachments.
- Following the manufacturer's installation procedures and recommendations for using and testing quick coupler devices and 4 attachment connections whenever an attachment is made.
- Training employees in: the proper use of quick couplers; making visual inspections; procedures for engaging attachments; and methods for testing connections.
- Requiring employees to use the proper procedures for engaging excavation attachments and incorporating the procedures into the company's safety and health program.

Occupational Safety & Health Administration
200 Constitution Avenue, NW
Washington, DC 20210
www.osha.gov

U. S. Department of Labor
Occupational Safety and Health Administration
Directorate of Enforcement Programs
Office of Health Enforcement

Hazards Associated with Striking Underground Gas Lines

Safety and Health Information Bulletin (SHIB 03-05-21)

This Safety and Health Information Bulletin is not a standard or regulation, and it creates no new legal obligations. The Bulletin is advisory in nature, informational in content, and is intended to assist employers in providing a safe and healthful workplace. Pursuant to the Occupational Safety and Health Act, employers must comply with hazard-specific safety and health standards promulgated by OSHA or by a state with an OSHA-approved state plan. In addition, pursuant to Section 5(a)(1), the General Duty Clause of the Act, employers must provide their employees with a workplace free from recognized hazards likely to cause death or serious physical harm. Employers can be cited for violating the General Duty Clause if there is a recognized hazard and they do not take reasonable steps to prevent or abate the hazard. However, failure to implement any recommendations in this Safety and Health Information Bulletin is not, in itself, a violation of the General Duty Clause. Citations can only be based on standards, regulations, and the General Duty Clause.

Preface

The National Transportation Safety Board (NTSB) reported an incident involving the rupture of an underground natural gas pipeline during excavation that resulted in the release of natural gas and a subsequent explosion.[1] Following their investigation, the NTSB recommended that the Occupational Safety and Health Administration (OSHA) "[r]equire excavators to notify pipeline operators immediately if their work damages a pipeline and to call 911 or other local emergency response numbers immediately if the damage results in a release of natural gas or other hazardous substance or potentially endangers life, health, or property."

Purpose

The purpose of this Safety and Health Information Bulletin is:

- to remind contractors of OSHA's requirements to prevent accidental damage to underground utility installations during excavation work. (29 CFR 1926.651(b); and
- to recommend notifying the pipeline operator immediately if the excavator causes damage to a pipeline and to call 911 or other emergency response numbers if the damage results in a release of natural gas or other hazardous substances.

Background

On December 11, 1998, while attempting to install a utility pole support anchor in a city sidewalk in St. Cloud, Minnesota, a cable construction company installation crew struck and ruptured an underground, 1-inch-diameter, high-pressure, plastic gas service pipeline, resulting in a natural gas leak. Approximately 39 minutes later, while utility workers and emergency response personnel were assessing the situation and taking preliminary steps to stop the gas leak, an explosion occurred. As a result of the explosion, 4 persons were fatally injured; 1 person was seriously injured; and 10 persons, including 2 firefighters and 1 police officer, received minor injuries. Six buildings were destroyed.

Incident Description

The cable construction company installation crew was installing a utility pole support anchor in a city sidewalk. They struck and ruptured an underground, high-pressure gas service pipeline, resulting in a natural gas leak.

Within a minute of striking the gas line, the company crew foreman, following company procedures, informed his supervisor. However, the supervisor did not immediately notify the owner of the gas line or emergency response agencies. About 15 minutes after the gas line was struck, another individual, who was not associated with the construction project, notified emergency responders. The supervisor called the owner of the gas line about 30 minutes after the line was struck.

A fire truck and four firefighters were on the scene about 18 minutes after the rupture and about 2 minutes after being notified. Two power company employees, a gas technician specialist, and a utility locator technician, having been notified by the fire department, arrived on the scene about 26 minutes after the pipeline was ruptured.

The gas technician specialist entered the basement of a nearby building, which housed a deli and a pizza restaurant. While the gas technician specialist was taking readings with a combustible gas monitor, the locator technician was determining whether the service line was properly marked. Approximately 39 minutes after the gas line was struck, the explosion killed the gas technician specialist, the utility locator technician, one person in the building, and a nearby pedestrian. A three-person power company construction crew, which had been dispatched to shut down the damaged portion of the line, was still 2 blocks away from the accident site when the explosion occurred.

According to the report of the Minnesota Fire Marshal, the explosion occurred in the basement of the building that housed the pizza restaurant and deli. The report could not identify the source that ignited the gas that was accumulated in the basement. However, potential ignition sources included gas water heaters.

The NTSB determined that the accident was related to the lack of adequate procedures by the cable construction company to prevent damage to underground utilities when excavating. Contributing to the severity of the accident was the company's delay in notifying the utility operator and proper authorities.

The Minnesota OSHA, Minnesota Department of Labor and Industry, investigated the accident and cited the cable construction company for violating workplace safety programs, the Minnesota General Duty Clause, and excavation requirements (29 CFR 1926. 651(b) standard).

Other Information

In 1997, NTSB published a safety study that discussed industry and government actions to prevent excavation damage.[2] The study concluded that, at a minimum, "excavators should formulate an emergency response plan appropriate for the specific construction site and ensure that employees working at that site know the correct action to take if a buried facility is damaged."

The safety study referred to a previous safety recommendation, NTSB P-95-25, issued to the American Public Works Association (APWA) following a 1993 NTSB accident investigation in St. Paul, Minnesota. NTSB P-95-25 recommended that the APWA urge its "members to call 911 immediately, in addition to calling the gas company, if a natural gas line has been severed."

In August 1999, the Department of Transportation published Common Ground: The Study of One-Call Systems and Damage Prevention.[3] The report recommended that "if the protective coating of an electrical line is penetrated or gases or liquids are escaping from a broken line which endangers life, health or property, the excavator [should] immediately contact local emergency personnel or call 911 to report the damage location."

The National Utility Locating Contractors Association (NULCA) has published guidelines for excavation practices and procedures for damage prevention. These guidelines suggest that excavators call 911 if excavation damage "involves a potential risk to life, health or significant property damage."

The State of Minnesota revised Minnesota Statute 216D, effective August 1, 1999. The law states, in part:

"If any damage occurs to an underground facility or its protective covering, the excavator shall notify the operator promptly. When the operator receives a damage notice, the operator shall promptly dispatch personnel to the damage area to investigate. If the damage results in the escape of any flammable, toxic, or corrosive gas or liquid or endangers life, health, or property, the excavator responsible shall immediately notify the operator and the 911 public safety answering point...and take immediate action to protect the public and property." (Emphasis added)

OSHA Standards

OSHA's 29 CFR 1926.651 standard establishes specific excavation requirements designed to protect employees and prevent accidental damage to underground utility installations. The requirements include:*

- Establishing the location of underground installations prior to opening an excavation;

- Contacting utility companies or owners within established or customary local response times. When utility companies or owners cannot respond to a request to locate underground utility installations within 24 hours or cannot establish the exact location of these installations, the employer may proceed with caution using detection equipment or other acceptable means to locate utility installations;
- When approaching the estimated location of underground installations, the exact location of the underground installations shall be determined by safe and acceptable means; and
- While the excavation is open, underground installations shall be protected, supported, or removed as necessary to safeguard employees.

Conclusions

Excavators need to: establish a detailed work plan and train their employees prior to excavating on the proper procedures of determining the locations of underground utilities; contact and coordinate with the utilities companies to establish the locations of the underground installations; and take all necessary precautions to prevent damaging underground utility installations.

If an underground utility is damaged, the utility operator is in the best position to determine the hazards associated with the damage and implement appropriate countermeasures. OSHA recommends that the excavator notify the utility operator promptly. If the damage results in the release of hazardous gases or liquids, both the utility operator and appropriate emergency response officials should be notified immediately.

---

[1]National Transportation Safety Board. 2000. Natural Gas Pipeline Rupture and Subsequent Explosion in St. Cloud, Minnesota, December 11, 1998. Pipeline Accident Report NTSB/PAR-00/01. Washington, D.C.

[2]National Transportation Safety Board. 1997. Protecting Public Safety Through Excavation Damage Prevention. Safety Study NTSB/SS-97/01. Washington, D.C.

[3]The Common Ground report was prepared by more than 160 individuals representing a wide range of interests, organizations, and viewpoints. The report focuses on preventing damage to underground facilities. The project was initiated by the U.S. Department of Transportation's Office of the Pipeline Safety, an element of the Research and Special Programs Administration, in response to the Transportation Equity Act for the 21st Century, Public Law 105-78, enacted on June 9, 1998. The purpose of the year-long study was to identify and validate existing best practices to prevent damage to underground facilities.

* Please refer to the Code of Federal Regulations for the full text of the requirements.

Occupational Safety & Health Administration
200 Constitution Avenue, NW
Washington, DC 20210
www.osha.gov

In Compliance with the Americans with Disabilities Act (ADA), this publication is available in alternative formats by calling the OR-OSHA Public Relations Manager at (503) 378-3272 (V/TTY).