OREGON OCCUPATIONAL SAFETY AND HEALTH STANDARDS

Oregon Administrative Rules, Chapter 437

DIVISION 2 (29 CFR 1910)
GENERAL OCCUPATIONAL SAFETY & HEALTH RULES

SUBDIVISION G:

OCCUPATIONAL HEALTH AND ENVIRONMENTAL CONTROL (1910.94 - 1910.98)

Oregon Occupational Safety and Health Division (Oregon OSHA)
Department of Consumer and Business Services
Salem, Oregon 97301-3882

AO 1-2012

The Oregon Department of Consumer and Business Services adopted these rules pursuant to ORS 654.025(2).

The Secretary of State Designated OAR Chapter 437 as the "Oregon Occupational Safety and Health Code." Six general subject areas within this code are designated as "Divisions."

- **Division 1** General Administrative Rules
- **Division 2** General Occupational Safety and Health Rules
- **Division 3** Construction
- **Division 4** Agriculture
- **Division 5** Maritime Activities
- **Division 7** Forest Activities
- **Oregon Revised Statutes (ORS)** 654 The Oregon Safe Employment Act (OSEAct)

Oregon-initiated rules in this division of the Oregon Occupational Safety and Health Code are numbered in a uniform system developed by the Secretary of State. This system does not number the rules in sequence (001, 002, 003, etc.). Omitted numbers may be assigned to new rules at the time of their adoption.

Oregon-initiated rules are arranged in the following Basic Codification Structure adopted by the Secretary of State for Oregon Administrative Rules (OAR):

Chapter	Division	Rule	Section	Subsection	Paragraphs
437	*002*	*0322*	*(1)*	*(a)*	*(A)(i)(I)*

The majority of Oregon OSHA codes are adopted by reference from the Code of Federal Regulations (CFR), and are arranged in the following basic federal numbering system:

Chapter	Division	Part	Subpart (Subdivision)	Section	Paragraphs
437	002	1910	S	.303	(a)

The terms "subdivision" and "subpart" are synonymous within OAR 437, Oregon Occupational Safety and Health Code.

To obtain an order form or copies of these codes, address:

Department of Consumer & Business Services
Oregon Occupational Safety & Health Division (Oregon OSHA)
350 Winter St. NE, Room 430
Salem, OR 97301-3882

Or call the Oregon OSHA Resource Library at 503-378-3272

The rules referenced in this division are available for viewing in the Office of the Secretary of State, Administrative Rules and Office Document Section, Oregon State Archives Building, Salem, Oregon 97310, or the Central Office, Oregon Occupational Safety and Health Division of the Department of Consumer and Business Services, Room 430, 350 Winter St. NE Salem, OR 97301-3882. Please visit our web site at: www.orosha.org

NOTE: The following federal rules were adopted by reference by OR-OSHA Admin. Order 2-1992, filed 2/6/92, **EFFECTIVE 5/1/92:** OAR 437, Division 2, **Subdivision G, Occupational Health and Environmental Control** (29 CFR 1910.94 through 1910.100, with the **exception of 1910.95,** Occupational Noise Exposure). In Oregon, Division 121, Occupational Noise and Hearing Conservation, was still applicable until 5/1/93, when 1910.95 was adopted by reference.

OAR 437-002-0080 is the rule which adopts by reference the federal standards.

Oregon-initiated rules were also adopted pertaining to Ventilation and Abrasive Blasting (437-002-0081), and Ionizing Radiation (437-002-0098). These Oregon-initiated rules are printed in italics and located in proximity to related federal rules.

The following Oregon codes were **replaced** by federal standards in Division 2/G **effective 5/1/92:**

Division 117, Abrasive Blasting
Division 118, Grinding, Polishing and Buffing Operations
Division 120, Open Surface Tanks
Division 138, Ionizing Radiation
Division 139, Nonionizing Radiation
Division 141, Ventilation

NOTE: OAR 437, Division 121, Occupational Noise and Hearing Conservation, was **superseded and replaced with the adoption by reference of 29 CFR 1910.95, Occupational Noise Exposure,** by OR-OSHA Admin. Order 4-1993, filed 4/1/93, **EFFECTIVE 5/1/93.**

Several federal rules were not adopted by OR-OSHA in order to maintain the level of protection provided in the past by Division 121. These federal rules are 1910.95(g)(3); (g)(5)(ii); (g)(10)(ii); (i)(2)(ii)(A); (o); and Appendix F.

One Oregon-initiated rule pertaining to Audiometric Testing in Oregon (OAR 437-002-0095) was also adopted in lieu of 1910.95(g)(3), and is printed ***in italics*** in place of the federal rule.

NOTE: OAR 437-002-0098(2) has been deleted because it is no longer needed. Federal OSHA corrected the term “Atomic Energy Commission” in 1910.96 to read “Nuclear Regulatory Commission.”

NOTE: Oregon OSHA adopted by reference corrections and technical amendments issued by federal OSHA and published in the Federal Register. Federal OSHA made simple corrections, deleted redundant provisions, and clarified and reorganized various other provisions throughout the standards. OR-OSHA Admin. Order 4-1997, filed 4/2/97, effective 4/2/97.

NOTE: Federal OSHA published in the Federal Register the new Respiratory Protection Standard. The new standard replaces respiratory protection standards that were adopted in 1971 by OSHA. The **new respiratory protection text is in general industry, 29 CFR 1910.134**. The text previously in 1910.134 has been redesignated as 1910.139, Respiratory Protection for M. Tuberculosis. Four subdivisions in the Construction standard have also been amended. OR-OSHA Admin. Order 3-1998, filed 7/7/98, effective 7/7/98.

NOTE: Federal OSHA published in the March 23, 1999, Federal Register changes to the standards for dipping and coating operations in general industry.

Based on comments received during the national review of these rules, and other considerations, federal OSHA developed the final standard to accomplish several goals: To rewrite the former standards in plain language; to consolidate the former requirements in sequential sections (sections 1910.122 through 1910.126 in Subdivision H of 1910 (general industry)); and to update the former standards to increase the compliance options available to employers. In addition to achieving these goals, OSHA concludes that the final rule will enhance employee protection by making it more understandable and useful to employers and employees and more flexible and performance-oriented than the former rules. The final rule accomplishes these goals without increasing the regulatory burden of employers or reducing employee protection.

OR-OSHA adopted the federal amendments by reference into its Divisions 2/A, 2/G, and 2/H in OR-OSHA Administrative Order 8-1999, filed and effective August 6, 1999.

NOTE: OAR 437-002-0107, Spray Finishing, replaces 1910.94(c) and 1910.107. Written in clear language with all requirements in one location, language was added to 437-002-0107 to allow for alternatives to certain requirements when the local fire authority allows an alternative in writing. Language was added to clarify requirements for paint mixing rooms from 437-002-1910.106, Article 80 of the Uniform Fire Code and NFPA 86-1999. OR-OSHA Admin. Order 3-2003, filed and effective 4/21/03.

NOTE: Oregon OSHA adopted Federal OSHA changes as they appear in the April 3, 2006 Federal Register. These revisions include updating references and removing obsolete effective dates and startup dates from existing rules in General Industry, Construction, and Maritime Activities. Two changes Federal OSHA made that we do not include in this rulemaking are to remove effective dates in 1910.266 and 1926.1092, neither of which OR-OSHA had adopted before. OR-OSHA Admin. Order 4-2006, filed and effective 7/24/06.

NOTE: This rule making is to keep Oregon OSHA in harmony with recent changes to Federal OSHA's standards. We are removing several references to consensus standards that have requirements that duplicate, or are comparable to, other OR-OSHA rules; this action includes correcting a paragraph citation in one of these rules. We are also removing a reference to American Welding Society standard A3.0-1969 ("Terms and Definitions") in our general industry welding standards. This rulemaking is part of a continuing effort to update references to consensus and industry standards used throughout our rules.

OR-OSHA adopts the changes in general industry as published in the December 14, 2007 Federal Register. A reference to American National Standard Safety Requirements for Explosive-Actuated Fastening Tools, ANSI A10.3-1995 is removed in Division 4/P, Agriculture/Small Tools.

This is OR-OSHA Administrative Order 7-2008, **adopted and effective May 30, 2008**.

NOTE: In this rulemaking, Oregon OSHA is amending its standards to add language clarifying that the personal protective equipment (PPE) and training requirements impose a compliance duty to each and every employee covered by the standards and that noncompliance may expose the employer to liability on a per-employee basis. The amendments consist of new paragraphs added to the introductory sections of the affected rules and changes to the language of some existing respirator and training requirements.

These Federal OSHA changes are in general industry, construction, and maritime and were published in the December 12, 2008 Federal Register.

This is Oregon OSHA Administrative Order 5-2009, **adopted and effective May 29, 2009**.

NOTE: This rulemaking is to keep Oregon OSHA in harmony with recent changes to Federal OSHA's standards.

Federal OSHA revised the personal protective equipment (PPE) sections of its general industry, shipyard employment, longshoring, and marine terminals standards concerning requirements for eye- and face-protective devices, and head and foot protection.

Federal OSHA updated the references in its regulations to reflect more recent editions of the applicable national consensus standards that incorporate advances in technology. Federal OSHA requires that PPE be safely designed and constructed for the tasks performed.

Amendments to the PPE standards include a requirement that filter lenses and plates in eye-protective equipment meet a test for transmission of radiant energy such as light or infrared.

Oregon OSHA adopted the changes in general industry and maritime activities as published in the September 9, 2009 Federal Register. The updated references are also made in Oregon OSHA's Division 4, Agriculture, and Division 7, Forest Activities.

This is Oregon OSHA Administrative Order 2-2010, **adopted and effective February 25, 2010**.

NOTE: This rulemaking is to keep Oregon OSHA in harmony with recent changes to Federal OSHA's standards.

Federal OSHA published in the December 27, 2011 Federal Register corrections of typographical errors and non-substantive technical amendments to a number of standards in general industry, construction, and shipyard employment. The technical amendments include updating or revising cross-references. These revisions do not affect the substantive requirements or coverage of those standards, do not modify or revoke existing rights or obligations, and do not establish new rights or obligations.

Oregon OSHA adopts these corrections and amendments to the standards Oregon has adopted previously to reflect federal OSHA's changes. We are also making rule reference changes in a number of standards to reflect the newly adopted OAR 437-002-0134 Personal Protective Equipment.

This is Oregon OSHA Administrative Order 1-2012, **adopted and effective April 10, 2012.**

TABLE OF CONTENTS

437-002-0080 *Adoption by Reference* G-1

437-002-0081 *Oregon Ventilation Regulations* G-3

1910.94 Ventilation G-5

1910.95 Occupational Noise Exposure G-25

437-002-0095 *Audiometric Testing in Oregon* G-27

Appendix A to §1910.95 – Noise Exposure Computation G-35

Appendix B to §1910.95 – Methods for Estimating the Adequacy of Hearing Protector Attenuation G-39

Appendix C to §1910.95 – Audiometric Measuring Instruments G-41

Appendix D to §1910.95 – Audiometric Test Rooms G-43

Appendix E to §1910.95 – Acoustic Calibration of Audiometers G-45

Appendix G to §1910.95 – Monitoring Noise Levels G-47

Appendix H to §1910.95 – Availability of Referenced Documents G-51

Appendix I to §1910.95 – Definitions G-53

1910.96 Ionizing Radiation. Redesignated as §1910.1096 ..... G-55

1910.97 Nonionizing Radiation G-55

1910.98 Effective Dates G-59

OAR 437, DIVISION 2

GENERAL OCCUPATIONAL SAFETY AND HEALTH RULES

SUBDIVISION G – OCCUPATIONAL HEALTH AND ENVIRONMENTAL CONTROL

437-002-0080 Adoption by Reference. *In addition to, and not in lieu of, any other safety and health codes contained in OAR Chapter 437, the Department adopts by reference the following federal regulations printed as part of the Code of Federal Regulations, 29 CFR 1910, in the Federal Register:*

(1) 29 CFR 1910.94 **Ventilation**, published 9/9/09, FR vol. 74, no. 173, pp. 46350-46361; amended with Oregon OSHA Admin. Order 1-2012, f. 4/10/12, ef. 4/10/12.

(2) 29 CFR 1910.95 **Occupational Noise Exposure**, published 12/12/08. FR vol. 73, no. 240, pp. 75568-75589.

NOTE: 29 CFR 1910.96 **Ionizing radiation**, has been redesignated to 29 CFR 1910.1096.

(3) 29 CFR 1910.97 **Nonionizing radiation**, published 3/7/96, FR vol. 61, no. 46, p. 9236.

(4) 29 CFR 1910.98 **Effective dates**, published 6/27/74, Federal Register, vol. 39, p. 23502.

These standards are on file with the Occupational Safety and Health Division, Oregon Department of Consumer and Business Services, and the United States Government Printing Office.

Stat. Auth.: ORS 654.025(2) and 656.726(4).
Stats. Implemented: ORS 654.001 through 654.295.
Hist: OR-OSHA Admin. Order 2-1992, f. 2/6/92, ef. 5/1/92 (all except .95).
OR-OSHA Admin. Order 4-1993, f. 4/1/93, ef. 5/1/93 (Noise).
OR-OSHA Admin. Order 4-1997, f. 4/2/97, ef. 4/2/97.
OR-OSHA Admin. Order 3-1998, f. 7/7/98, ef. 7/7/98.
OR-OSHA Admin. Order 8-1999, f. 8/6/99, ef. 8/6/99.
OR-OSHA Admin. Order 3-2003, f. 4/21/03, ef. 4/21/03.
OR-OSHA Admin. Order 4-2006, f. 7/24/06, ef. 7/24/06.
OR-OSHA Admin. Order 7-2008, f. 5/30/08, ef, 5/30/08.
OR-OSHA Admin. Order 5-2009, f. 5/29/09, ef, 5/29/09.
OR-OSHA Admin. Order 2-2010, f. 2/25/10, ef, 2/25/10.
OR-OSHA Admin. Order 1-2012, f. 4/10/12, ef. 4/10/12.

SUBDIVISION G

OCCUPATIONAL HEALTH AND ENVIRONMENTAL CONTROLS

Authority: Sections. 4, 6, and 8 of the Occupational Safety and Health Act of 1970 (29 U.S.C. 653, 655, 657); Secretary of Labor's Order No. 12-71 (36 FR 8754), 8-76 (41 FR 25059), 9-83 (48 FR 35736), 1-90 (55 FR 9033), 6-96 (62 FR 111), 3-2000 (65 FR 50017), 5-2002 (67 FR 50017), or 5-2007 (72 FR 31159) as applicable; and 29 CFR part 1911.

NOTE: The following Oregon-Initiated rules relate to 29 CFR 1910.94, **Ventilation**:

437-002-0081 Oregon Ventilation Regulations. *In addition to and not in lieu of 29 CFR 1910.94, the following rules pertaining to ventilation apply in Oregon:*

(1) Definitions.

(a) Administrative control *means the reduction of employee exposure to physical or chemical agents by control of the time of exposure to some period less than 8 hours in length.*

(b) Harmful *or* ***hazardous,*** *as applied to the health effects of dusts, fumes, vapors, mists, gases, or any environmental condition, means any mechanical, infectious, toxic, or other action which is likely to produce medically determined injury or disease of exposed workers.*

(c) Health hazard control measure *means the equipment or working arrangements designed to prevent the exposure of employees to harmful or hazardous situations. Such control measures may include, but are not limited to:*

(A) *Ventilation systems;*

(B) *Energy absorption system;*

(C) *Personal protective equipment;*

(D) *Air contaminant monitoring; and*

(E) *Human biological monitoring.*

(d) Local exhaust system *means a system of hoods, booths, or enclosures designed to remove contaminants at points of generation or release into the atmosphere connected by means of piping to airflow or suction producing equipment.*

(e) Occupational health hazard *means those materials, processes, and atmospheric contaminants or energy concentrations which during normal or abnormal working conditions are likely to result in injury or illness to the unprotected employee.*

(f) Ventilation, dilution *means ventilation provided to dilute the concentration of atmospheric contaminants in the atmosphere in all or part of the place of employment.*

(g) Ventilation, general *means the provision of fresh air at the place of employment.*

(h) Ventilation, local exhaust *means that type of ventilation in which suction is applied at the point of generation or release of atmospheric contaminants.*

(i) Ventilation, natural *means ventilation designed to depend wholly upon relative air density, and includes the use of openable doors, windows, and other building apertures.*

(2) Recirculation. *No air from any local exhaust system shall be recirculated, unless:*

(a) *The inert dust contained therein has a Permissible Exposure Limit (PEL) equal to or greater than 10 milligrams per cubic meter as listed in Oregon Tables Z-1, Z-2, or Z-3 in OAR 437, Division 2/Z, OAR 437-002-0382, Oregon Rules for Air Contaminants. The inert dust concentration in such recirculated air shall not exceed 5 milligrams per cubic meter; or*

(b) *The contaminant contained therein has a Permissible Exposure Limit (PEL) equal to or greater than 100 parts per million as listed in Oregon Tables Z-1, Z-2, or Z-3 of OAR 437, Division 2/Z, OAR 437-002-0382, Oregon Rules for Air Contaminants. The contaminant concentration in such recirculated air shall not exceed 25 percent of its PEL; or*

(c) *The concentrations of contaminants in recirculated air do not exceed 25 percent of unity as calculated by the formula given in OAR 437-002-0382(4)(b), Oregon Rules for Air Contaminants, in Division 2/Z.*

(3) Make-up Air. *Outside air equal in amount to the air removed by local exhaust systems shall be provided to replace air removed by an exhaust ventilation system.*

(4) Air Contamination From Exhaust System. *The discharge from any exhaust system shall be such that no air contamination therefrom will enter any window, door, or other opening of any work area in quantities sufficient to create a harmful or hazardous work atmosphere.*

(5) Use of Salamanders and Fuel-Burning Heating Devices. *Salamanders and other fuel-burning heating devices shall not be used in enclosed or inadequately ventilated spaces in which workers are employed unless such heating device is provided with a proper pipe, chimney, or enclosure to carry hazardous gases to the outside atmosphere.*

(6) Local Exhaust Ventilation. *The capacity of a local exhaust system shall be calculated on the basis of all hoods, booths, and enclosures connected to the system being open, except where the system is so interlocked that only a portion of it can be operated at a given time, in which case the capacity shall be calculated on the basis that all the hoods in the group requiring the greatest volume rate of exhaust are open.*

(7) Exhausting More Than One Substance. *Two or more operations involving more than one substance shall not be connected to the same exhaust system when a combination of the substances removed may constitute a fire hazard, or otherwise dangerous mixture.*

(8) Exhausting Materials with Flammable Properties. *Those processes or operations which require local exhaust ventilation and generate materials with flammable properties shall be protected from sources of ignition.*

(9) Removal of Collected Materials. *Collected materials shall be removed when necessary so as to maintain effective operation of the local exhaust system at all times.*

(10) Disposal of Collected Materials. *Collected materials shall be disposed of in a manner which will not result in a hazard.*

(11) Requirements for Reduction of Air Contaminant Concentrations. *A local exhaust system shall be in operation until all contaminants are reduced to concentrations at or below the Threshold Limit Values when any person is at risk.*

§1910.94 Ventilation.

(a) Abrasive blasting.

(1) Definitions applicable to this paragraph.

(i) Abrasive. A solid substance used in an abrasive blasting operation.

(ii) Abrasive-blasting respirator. A respirator constructed so that it covers the wearer's head, neck, and shoulders to protect the wearer from rebounding abrasive.

(iii) Blast cleaning barrel. A complete enclosure which rotates on an axis, or which has an internal moving tread to tumble the parts, in order to expose various surfaces of the parts to the action of an automatic blast spray.

(iv) Blast cleaning room. A complete enclosure in which blasting operations are performed and where the operator works inside of the room to operate the blasting nozzle and direct the flow of the abrasive material.

(v) Blasting cabinet. An enclosure where the operator stands outside and operates the blasting nozzle through an opening or openings in the enclosure.

(vi) Clean air. Air of such purity that it will not cause harm or discomfort to an individual if it is inhaled for extended periods of time.

(vii) Dust collector. A device or combination of devices for separating dust from the air handled by an exhaust ventilation system.

(viii) Exhaust ventilation system. A system for removing contaminated air from a space, comprising two or more of the following elements *(a)* enclosure or hood, *(b)* duct work, *(c)* dust collecting equipment, *(d)* exhauster, and *(e)* discharge stack.

(ix) Particulate-filter respirator. An air purifying respirator, commonly referred to as a dust or a fume respirator, which removes most of the dust or fume from the air passing through the device.

(x) Respirable dust. Airborne dust in sizes capable of passing through the upper respiratory system to reach the lower lung passages.

(xi) Rotary blast cleaning table. An enclosure where the pieces to be cleaned are positioned on a rotating table and are passed automatically through a series of blast sprays.

(xii) Abrasive blasting. The forcible application of an abrasive to a surface by pneumatic pressure, hydraulic pressure, or centrifugal force.

(2) Dust hazards from abrasive blasting.

(i) Abrasives and the surface coatings on the materials blasted are shattered and pulverized during blasting operations and the dust formed will contain particles of respirable size. The composition and toxicity of the dust from these sources shall be considered in making an evaluation of the potential health hazards.

(ii) The concentration of respirable dust or fume in the breathing zone of the abrasive-blasting operator or any other worker shall be kept below the levels specified in §1910.1000.

(iii) Organic abrasives which are combustible shall be used only in automatic systems. Where flammable or explosive dust mixtures may be present, the construction of the equipment, including the exhaust system and all electric wiring, shall conform to the requirements of American National Standard Installation of Blower and Exhaust Systems for Dust, Stock, and Vapor Removal or Conveying, Z33.1-1961 (NFPA 91-1961), which is incorporated by reference as specified in §1910.6, and Subpart S of this part. The blast nozzle shall be bonded and grounded to prevent the build up of static charges. Where flammable or explosive dust mixtures may be present, the abrasive blasting enclosure, the ducts, and the dust collector shall be constructed with loose panels or explosion venting areas, located on sides away from any occupied area, to provide for pressure relief in case of explosion, following the principles set forth in the National Fire Protection Association Explosion Venting Guide, NFPA 68-1954, which is incorporated by reference as specified in §1910.6.

(3) Blast-cleaning enclosures.

(i) Blast-cleaning enclosures shall be exhaust ventilated in such a way that a continuous inward flow of air will be maintained at all openings in the enclosure during the blasting operation.

(A) All air inlets and access openings shall be baffled or so arranged that by the combination of inward air flow and baffling the escape of abrasive or dust particles into an adjacent work area will be minimized and visible spurts of dust will not be observed.

(B) The rate of exhaust shall be sufficient to provide prompt clearance of the dust-laden air within the enclosure after the cessation of blasting.

(C) Before the enclosure is opened, the blast shall be turned off and the exhaust system shall be run for a sufficient period of time to remove the dusty air within the enclosure.

(D) Safety glass protected by screening shall be used in observation windows, where hard deep-cutting abrasives are used.

(E) Slit abrasive-resistant baffles shall be installed in multiple sets at all small access openings where dust might escape, and shall be inspected regularly and replaced when needed.

(1) Doors shall be flanged and tight when closed.

(2) Doors on blast-cleaning rooms shall be operable from both inside and outside, except that where there is a small operator access door, the large work access door may be closed or opened from the outside only.

(4) Exhaust ventilation systems.

(i) The construction, installation, inspection, and maintenance of exhaust systems shall conform to the principles and requirements set forth in American National Standard Fundamentals Governing the Design and Operation of Local Exhaust Systems, Z9.2-1960, and ANSI Z33.1-1961, which are incorporated by reference as specified in §1910.6.

(A) When dust leaks are noted, repairs shall be made as soon as possible.

(B) The static pressure drop at the exhaust ducts leading from the equipment shall be checked when the installation is completed and periodically thereafter to assure continued satisfactory operation. Whenever an appreciable change in the pressure drop indicates a partial blockage, the system shall be cleaned and returned to normal operating condition.

(ii) In installations where the abrasive is recirculated, the exhaust ventilation system for the blasting enclosure shall not be relied upon for the removal of fines from the spent abrasive instead of an abrasive separator. An abrasive separator shall be provided for the purpose.

(iii) The air exhausted from blast-cleaning equipment shall be discharged through dust collecting equipment. Dust collectors shall be set up so that the accumulated dust can be emptied and removed without contaminating other working areas.

(5) Personal protective equipment.

(i) Employers must use only respirators approved by the National Institute for Occupational Safety and Health (NIOSH) under 42 CFR part 84 to protect employees from dusts produced during abrasive-blasting operations.

(ii) Abrasive-blasting respirators shall be worn by all abrasive-blasting operators:

(A) When working inside of blast-cleaning rooms, or

(B) When using silica sand in manual blasting operations where the nozzle and blast are not physically separated from the operator in an exhaust ventilated enclosure, or

(C) Where concentrations of toxic dust dispersed by the abrasive blasting may exceed the limits set in §1910.1000 and the nozzle and blast are not physically separated from the operator in an exhaust-ventilated enclosure.

(iii) Properly fitted particulate filter respirators, commonly referred to as dust-filter respirators, may be used for short, intermittent, or occasional dust exposures such as cleanup, dumping of dust collectors, or unloading shipments of sand at a receiving point when it is not feasible to control the dust by enclosure, exhaust ventilation, or other means. The respirators used must be approved by NIOSH under 42 CFR part 84 for protection against the specific type of dust encountered.

(A) Dust-filter respirators may be used to protect the operator of outside abrasive-blasting operations where nonsilica abrasives are used on materials having low toxicities.

(B) Dust-filter respirators shall not be used for continuous protection where silica sand is used as the blasting abrasive, or toxic materials are blasted.

(iv) For employees who use respirators required by this section, the employer must implement a respiratory protection program in accordance with 29 CFR 1910.134.

(v) Operators shall be equipped with heavy canvas or leather gloves and aprons or equivalent protection to protect them from the impact of abrasives. Safety shoes shall be worn to protect against foot injury where heavy pieces of work are handled.

(A) Protective footwear must comply with the requirements specified by OAR 437-002-0134(10).

(B) Equipment for protection of the eyes and face shall be supplied to the operator when the respirator design does not provide such protection and to any other personnel working in the vicinity of abrasive blasting operations. This equipment shall conform to the requirements of OAR 437-002-0134.

(6) Air supply and air compressors. Air for abrasive-blasting respirators must be free of harmful quantities of dusts, mists, or noxious gases, and must meet the requirements for supplied air quality and use specified in 29 CFR 1910.134(i).

437-002-0081(12) Removed and Reserved.

(7) Operational procedures and general safety. Dust shall not be permitted to accumulate on the floor or on ledges outside of an abrasive-blasting enclosure, and dust spills shall be cleaned up promptly. Aisles and walkways shall be kept clear of steel shot or similar abrasive which may create a slipping hazard.

437-002-0081(13) Blasting Nozzles. *In addition to and not in lieu of the provisions of 1910.94(a)(7), blasting nozzles shall be equipped with a deadman switch or other effective means to prevent hose and nozzle from whipping. A support shall be provided on which the nozzle may be mounted when not in use.*

Stat. Auth.: ORS 654.025(2) and 656.726(4).
Stats. Implemented: ORS 654.001 through 654.295.
Hist: OR-OSHA Admin. Order 2-1992, f. 2/6/92, ef. 5/1/92.

(8) Scope. This paragraph (a) applies to all operations where an abrasive is forcibly applied to a surface by pneumatic or hydraulic pressure, or by centrifugal force. It does not apply to steam blasting, or steam cleaning, or hydraulic cleaning methods where work is done without the aid of abrasives.

(b) Grinding, polishing, and buffing operations.

(1) Definitions applicable to this paragraph.

(i) Abrasive cutting-off wheels. Organic-bonded wheels, the thickness of which is not more than 1/48th of their diameter for those up to, and including, 20 inches in diameter, and not more than 1/60th of their diameter for those larger than 20 inches in diameter, used for a multitude of operations variously known as cutting, cutting off, grooving, slotting, coping, and jointing, and the like. The wheels may be "solid" consisting of organic-bonded abrasive material throughout, "steel centered" consisting of a steel disc with a rim of organic-bonded material molded around the periphery, or of the "inserted tooth" type consisting of a steel disc with organic-bonded abrasive teeth or inserts mechanically secured around the periphery.

(ii) Belts. All power-driven, flexible, coated bands used for grinding, polishing, or buffing purposes.

(iii) Branch pipe. The part of an exhaust system piping that is connected directly to the hood or enclosure.

(iv) Cradle. A movable fixture, upon which the part to be ground or polished is placed.

(v) Disc wheels. All power-driven rotatable discs faced with abrasive materials, artificial or natural, and used for grinding or polishing on the side of the assembled disc.

(vi) Entry loss. The loss in static pressure caused by air flowing into a duct or hood. It is usually expressed in inches of water gauge.

(vii) Exhaust system. A system consisting of branch pipes connected to hoods or enclosures, one or more header pipes, an exhaust fan, means for separating solid contaminants from the air flowing in the system, and a discharge stack to outside.

(viii) Grinding wheels. All power-driven rotatable grinding or abrasive wheels, except disc wheels as defined in this standard, consisting of abrasive particles held together by artificial or natural bonds and used for peripheral grinding.

(ix) Header pipe (main pipe). A pipe into which one or more branch pipes enter and which connects such branch pipes to the remainder of the exhaust system.

(x) Hoods and enclosures. The partial or complete enclosure around the wheel or disc through which air enters an exhaust system during operation.

(xi) Horizontal double-spindle disc grinder. A grinding machine carrying two power-driven, rotatable, coaxial, horizontal spindles upon the inside ends of which are mounted abrasive disc wheels used for grinding two surfaces simultaneously.

(xii) Horizontal single-spindle disc grinder. A grinding machine carrying an abrasive disc wheel upon one or both ends of a power-driven, rotatable single horizontal spindle.

(xiii) Polishing and buffing wheels. All power-driven rotatable wheels composed all or in part of textile fabrics, wood, felt, leather, paper, and may be coated with abrasives on the periphery of the wheel for purposes of polishing, buffing, and light grinding.

(xiv) Portable grinder. Any power-driven rotatable grinding, polishing, or buffing wheel mounted in such manner that it may be manually manipulated.

(xv) Scratch brush wheels. All power-driven rotatable wheels made from wire or bristles, and used for scratch cleaning and brushing purposes.

(xvi) Swing-frame grinder. Any power-driven rotatable grinding, polishing, or buffing wheel mounted in such a manner that the wheel with its supporting framework can be manipulated over stationary objects.

(xvii) Velocity pressure (vp). The kinetic pressure in the direction of flow necessary to cause a fluid at rest to flow at a given velocity. It is usually expressed in inches of water gauge.

(xviii) Vertical spindle disc grinder. A grinding machine having a vertical, rotatable power-driven spindle carrying a horizontal abrasive disc wheel.

(2) Application. Wherever dry grinding, dry polishing or buffing is performed, and employee exposure, without regard to the use of respirators, exceeds the permissible exposure limits prescribed in §1910.1000 or other sections of this part, a local exhaust ventilation system shall be provided and used to maintain employee exposures within the prescribed limits.

(3) Hood and branch pipe requirements.

(i) Hoods connected to exhaust systems shall be used, and such hoods shall be designed, located, and placed so that the dust or dirt particles shall fall or be projected into the hoods in the direction of the air flow. No wheels, discs, straps, or belts shall be operated in such manner and in such direction as to cause the dust and dirt particles to be thrown into the operator's breathing zone.

(ii) Grinding wheels on floor stands, pedestals, benches, and special-purpose grinding machines and abrasive cutting-off wheels shall have not less than the minimum exhaust volumes shown in Table G-4 with a recommended minimum duct velocity of 4,500 feet per minute in the branch and 3,500 feet per minute in the main. The entry losses from all hoods except the vertical-spindle disc grinder hood, shall equal 0.65 velocity pressure for a straight takeoff and 0.45 velocity pressure for a tapered takeoff. The entry loss for the vertical-spindle disc grinder hood is shown in Figure G-1 (following §1910.94(b)).

Table G-4 - Grinding and Abrasive Cutting-Off Wheels

Wheels diameter (inches)	Wheel width (inches)	Minimum exhaust volume (feet^3/min.)
To 9 ……	1 1/2	220
Over 9 to 16 ……..	2	390
Over 16 to 19 ……	3	500
Over 19 to 24 ……	4	610
Over 24 to 30 ……	5	880
Over 30 to 36 ……	6	1,200

For any wheel wider than wheel diameters shown in Table G-4, increase the exhaust volume by the ratio of the new width to the width shown.

Example:

If wheel width = 4 1/2 inches, then

$$\frac{4.5}{4} \text{ x } 610 = 686\,(rounded 690).$$

(iii) Scratch-brush wheels and all buffing and polishing wheels mounted on floor stands, pedestals, benches, or special-purpose machines shall have not less than the minimum exhaust volume shown in Table G-5.

Table G-5 – Buffing and Polishing Wheels

Wheel diameter (inches)	Wheel width (inches)	Minimum exhaust volume (feet^3/min.)
To 9 ……	2	300
Over 9 to 16 …….	3	500
Over 16 to 19 ……..	4	610
Over 19 to 24 ……..	5	740
Over 24 to 30 ……..	6	1,040
Over 30 to 36 ……...	6	1,200

(iv) Grinding wheels or discs for horizontal single-spindle disc grinders shall be hooded to collect the dust or dirt generated by the grinding operation and the hoods shall be connected to branch pipes having exhaust volumes as shown in Table G-6.

Table G-6 – Horizontal Single-Spindle Disc Grinder

Disc diameter (inches)	Exhaust volume (feet.^{3}/min.)
Up to 12	220
Over 12 to 19	390
Over 19 to 30	610
Over 30 to 36	880

(v) Grinding wheels or discs for horizontal double-spindle disc grinders shall have a hood enclosing the grinding chamber and the hood shall be connected to one or more branch pipes having exhaust volumes as shown in Table G-7.

Table G-7 – Horizontal Double Spindle Disc Grinder

Disc diameter (inches)	Exhaust volume (ft.^{3}/min.)
Up to 12	610
Over 19 to 26	880
Over 26 to 30	1,200
Over 30 to 52	1,770
Over 53 to 72	6,280

(vi) Grinding wheels or discs for vertical single-spindle disc grinders shall be encircled with hoods to remove the dust generated in the operation. The hoods shall be connected to one or more branch pipes having exhaust volumes as shown in Table G-8.

Table G-8 – Vertical Spindle Disc Grinder

Disc diameter (Inches)	One-half or more of disc covered		Disc not covered	
	Number[1]	Exhaust foot^3/min.	Number[1]	Exhaust foot^3/min.
Up to 20	1	500	2	780
Over 20 to 30	2	780	2	1,480
Over 30 to 53	2	1,770	4	3,530
Over 53 to 72	2	3,140	5	6,010

[1] Number of exhaust outlets around periphery of hood, or equal distribution provided by other means.

(vii) Grinding and polishing belts shall be provided with hoods to remove dust and dirt generated in the operations and the hoods shall be connected to branch pipes having exhaust volumes as shown in Table G-9.

Table G-9 – Grinding and Polishing Belts

Belts width (inches)	Exhaust volume (ft.^{3}/min.)
Up to 3	220
Over 3 to 5	300
Over 5 to 7	390
Over 7 to 9	500
Over 9 to 11	610
Over 11 to 13	740

(viii) Cradles and swing-frame grinders. Where cradles are used for handling the parts to be ground, polished, or buffed, requiring large partial enclosures to house the complete operation, a minimum average air velocity of 150 feet per minute shall be maintained over the entire opening of the enclosure. Swing-frame grinders shall also be exhausted in the same manner as provided for cradles. (See Figure G-3)

(ix) Where the work is outside the hood, air volumes must be increased as shown in American Standard Fundamentals Governing the Design and Operation of Local Exhaust Systems, Z9.2-1960 (section 4, exhaust hoods).

(4) Exhaust systems.

(i) Exhaust systems for grinding, polishing, and buffing operations should be designed in accordance with American Standard Fundamentals Governing the Design and Operation of Local Exhaust Systems, Z9.2-1960.

(ii) Exhaust systems for grinding, polishing, and buffing operations shall be tested in the manner described in American Standard Fundamentals Governing the Design and Operation of Local Exhaust Systems, Z9.2-1960.

(iii) All exhaust systems shall be provided with suitable dust collectors.

(5) Hood and enclosure design.

(i)

(A) It is the dual function of grinding and abrasive cutting-off wheel hoods to protect the operator from the hazards of bursting wheels, as well as to provide a means for the removal of dust and dirt generated. All hoods shall be not less in structural strength than specified in Tables O-1 and O-9 of §1910.215.

(B) Due to the variety of work and types of grinding machines employed, it is necessary to develop hoods adaptable to the particular machine in question, and such hoods shall be located as close as possible to the operation.

(ii) Exhaust hoods for floor stands, pedestals, and bench grinders shall be designed in accordance with Figure G-2. The adjustable tongue shown in the figure shall be kept in working order and shall be adjusted within 1/4-inch of the wheel periphery at all times.

(iii) Swing-frame grinders shall be provided with exhaust booths as indicated in Figure G-3.

(iv) Portable grinding operations, whenever the nature of the work permits, shall be conducted within a partial enclosure. The opening in the enclosure shall be no larger than is actually required in the operation and an average face air velocity of not less than 200 feet per minute shall be maintained.

(v) Hoods for polishing and buffing and scratch-brush wheels shall be constructed to conform as closely to Figure G-4 as the nature of the work will permit.

(vi) Cradle grinding and polishing operations shall be performed within a partial enclosure similar to Figure G-5. The operator shall be positioned outside the working face of the opening of the enclosure. The face opening of the enclosure should not be any greater in area than that actually required for the performance of the operation and the average air velocity into the working face of the enclosure shall not be less than 150 feet per minute.

(vii) Hoods for horizontal single-spindle disc grinders shall be constructed to conform as closely as possible to the hood shown in Figure G-6. It is essential that there be a space between the back of the wheel and the hood, and a space around the periphery of the wheel of at least 1-inch in order to permit the suction to act around the wheel periphery. The opening on the side of the disc shall be no larger than is required for the grinding operation, but must never be less than twice the area of the branch outlet.

(viii) Horizontal double-spindle disc grinders shall have a hood encircling the wheels and grinding chamber similar to that illustrated in Figure G-7. The openings for passing the work into the grinding chamber should be kept as small as possible, but must never be less than twice the area of the branch outlets.

(ix) Vertical-spindle disc grinders shall be encircled with a hood so constructed that the heavy dust is drawn off a surface of the disc and the lighter dust exhausted through a continuous slot at the top of the hood as shown in Figure G-1.

(x) Grinding and polishing belt hoods shall be constructed as close to the operation as possible. The hood should extend almost to the belt, and 1-inch wide openings should be provided on either side. Figure G-8 shows a typical hood for a belt operation.

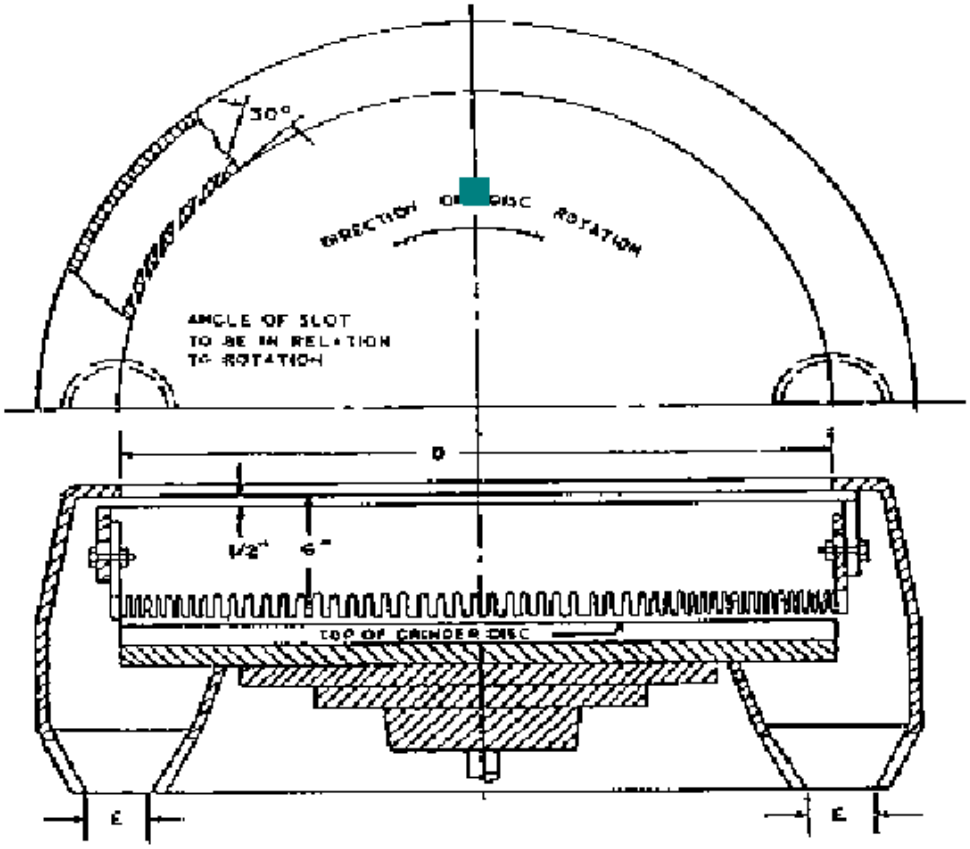

Figure G-1
Vertical Spindle Disc Grinder Exhaust Hood and Branch Pipe Connections

Dia *D*. inches		Exhaust *E*		Volume exhausted at 4,500 ft/min ft3/min	Note
Min.	Max.	No. Pipes	Dia.		
.....	20	1	4 1/4	500	When one-half or more of the disc can be hooded, use exhaust ducts as shown at the left.
Over 20	30	2	4	780	
Over 30	72	2	6	1,770	
Over 53	72	2	8	3,140	
.....	20	2	4	780	When no hood can be used over disc, use exhaust ducts as shown at left.
Over 20	20	2	4	780	
Over 30	30	2	5 1/2	1,480	
Over 53	53	4	6	3,530	
	72	5	7	6,010	

Entry loss = 1.0 slot velocity pressure + 0.5 branch velocity pressure.
Minimum slot velocity = 2,000 ft/min – 1/2-inch slot width.

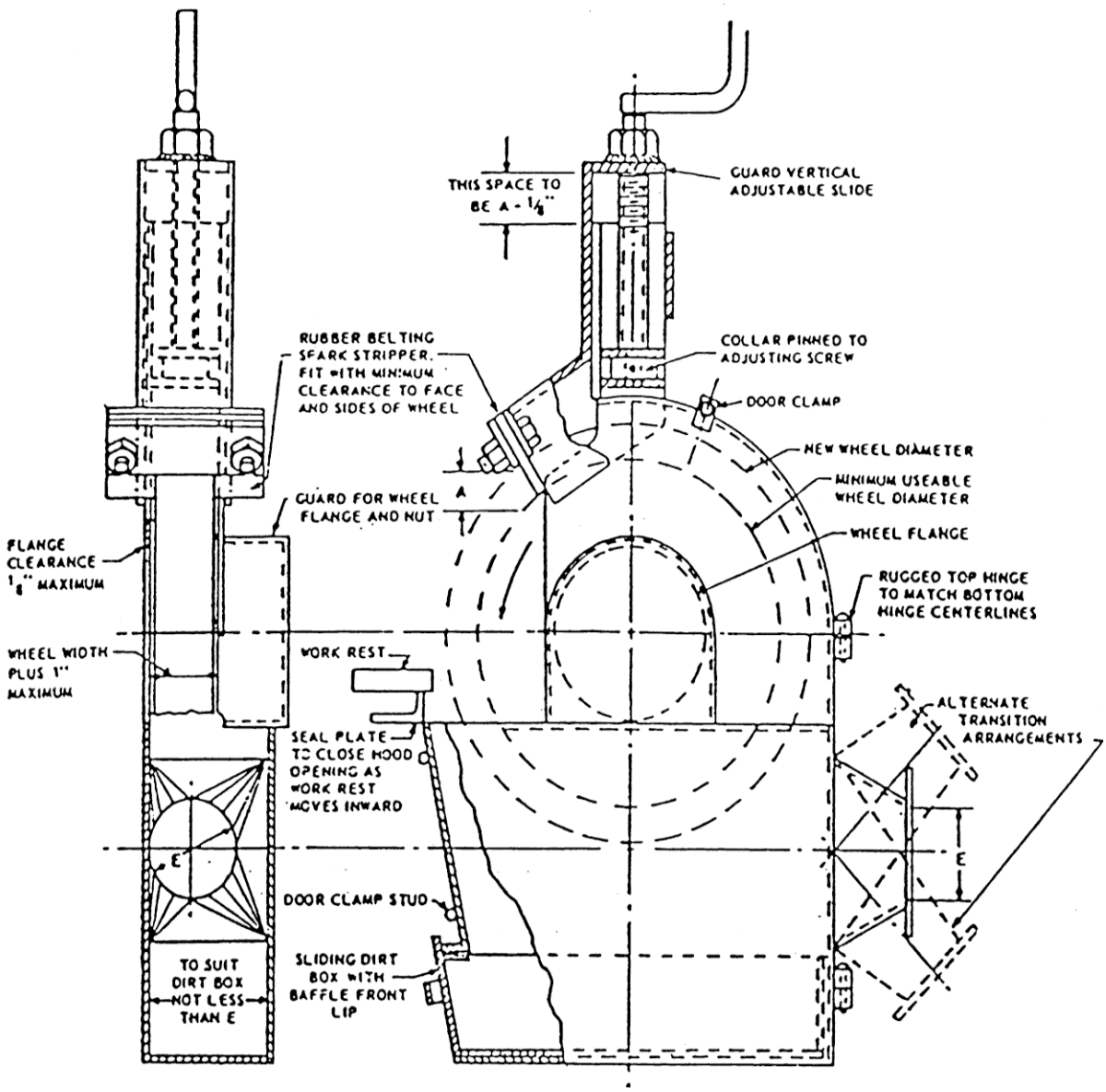

Figure G-2
Standard Grinder Hood

Wheel dimension, inches			Exhaust outlet inches *E*	Volume of air at 4,500 ft/min
Diameter		Width, Max		
Min = *d*	Max = *D*			
	9	1 1/2	3	220
Over 9	16	2	4	390
Over 16	19	3	4 1/2	500
Over 19	24	4	5	610
Over 24	30	5	6	880
Over 30	36	6	7	1,200

Entry loss = 0.45 velocity pressure for tapered takeoff; 0.65 velocity pressure for straight takeoff.

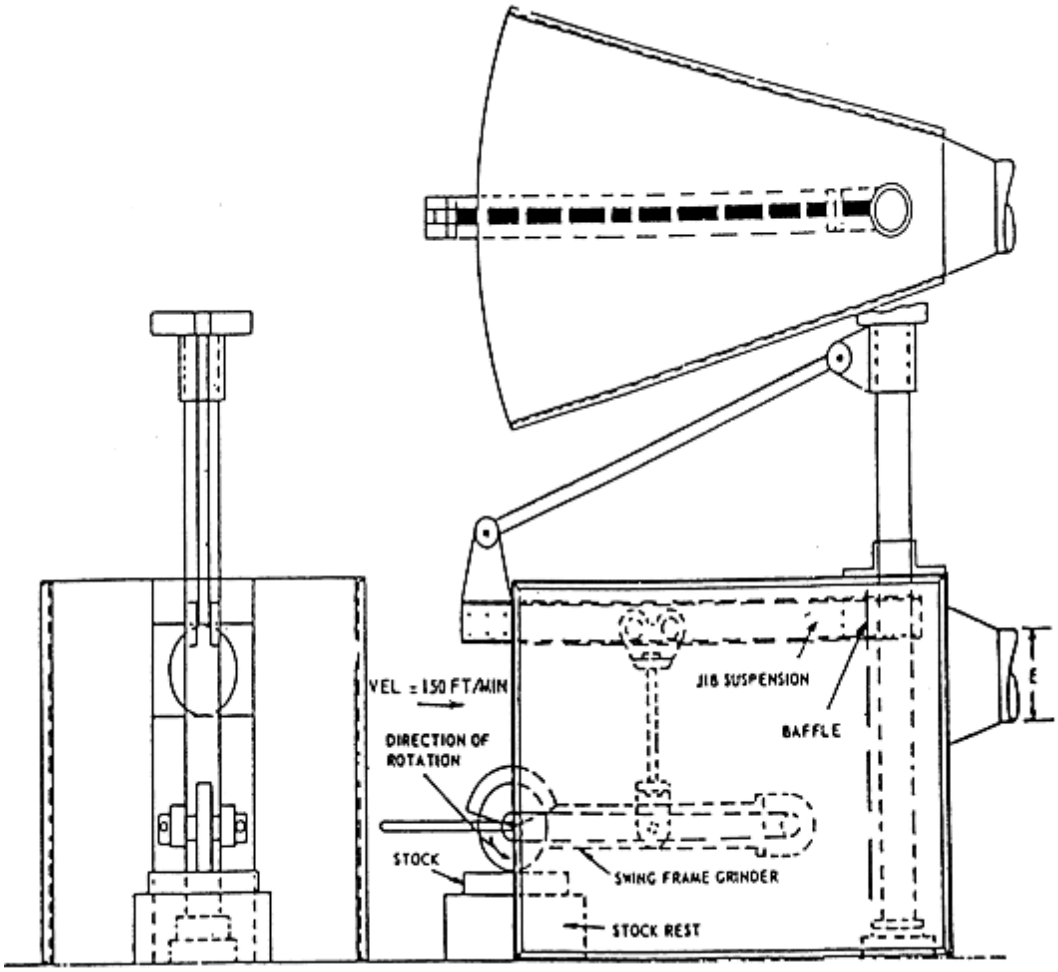

Figure G-3
A Method of Applying an Exhaust Enclosure to Swing-Frame Grinders

NOTE: Baffle to reduce front opening as much as possible

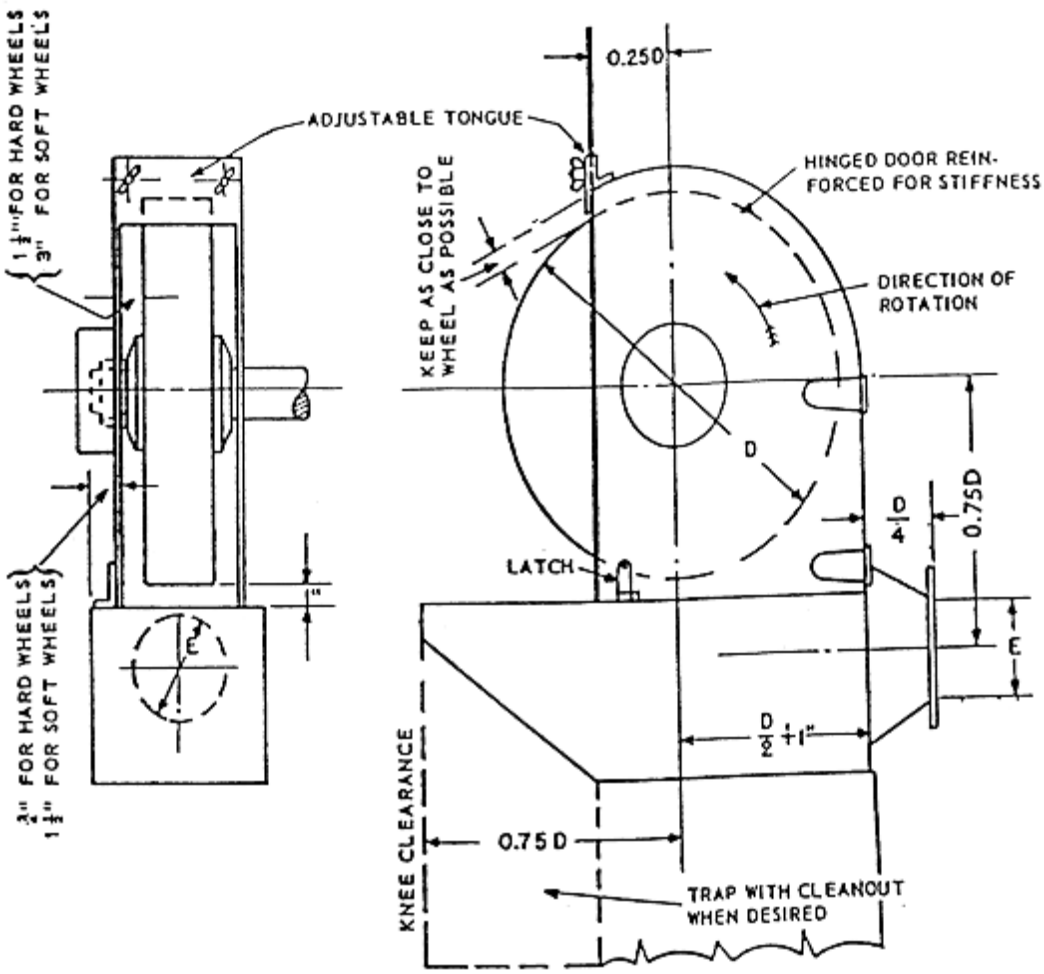

Figure G-4

Standard Buffing and Polishing Hood

Wheel dimension, inches			Exhaust outlet inches *E*	Volume of air at 4,500 ft/min
Diameter		Width, Max		
Min = *d*	Max = *D*			
	9	2	3 1/2	300
Over 9	16	3	4	500
Over 16	19	4	5	610
Over 19	24	5	5 1/2	740
Over 24	30	6	6 1/2	1,040
Over 30	36	6	7	1,200

Entry loss = 0.15 velocity pressure for tapered takeoff; 0.65 velocity pressure for straight takeoff.

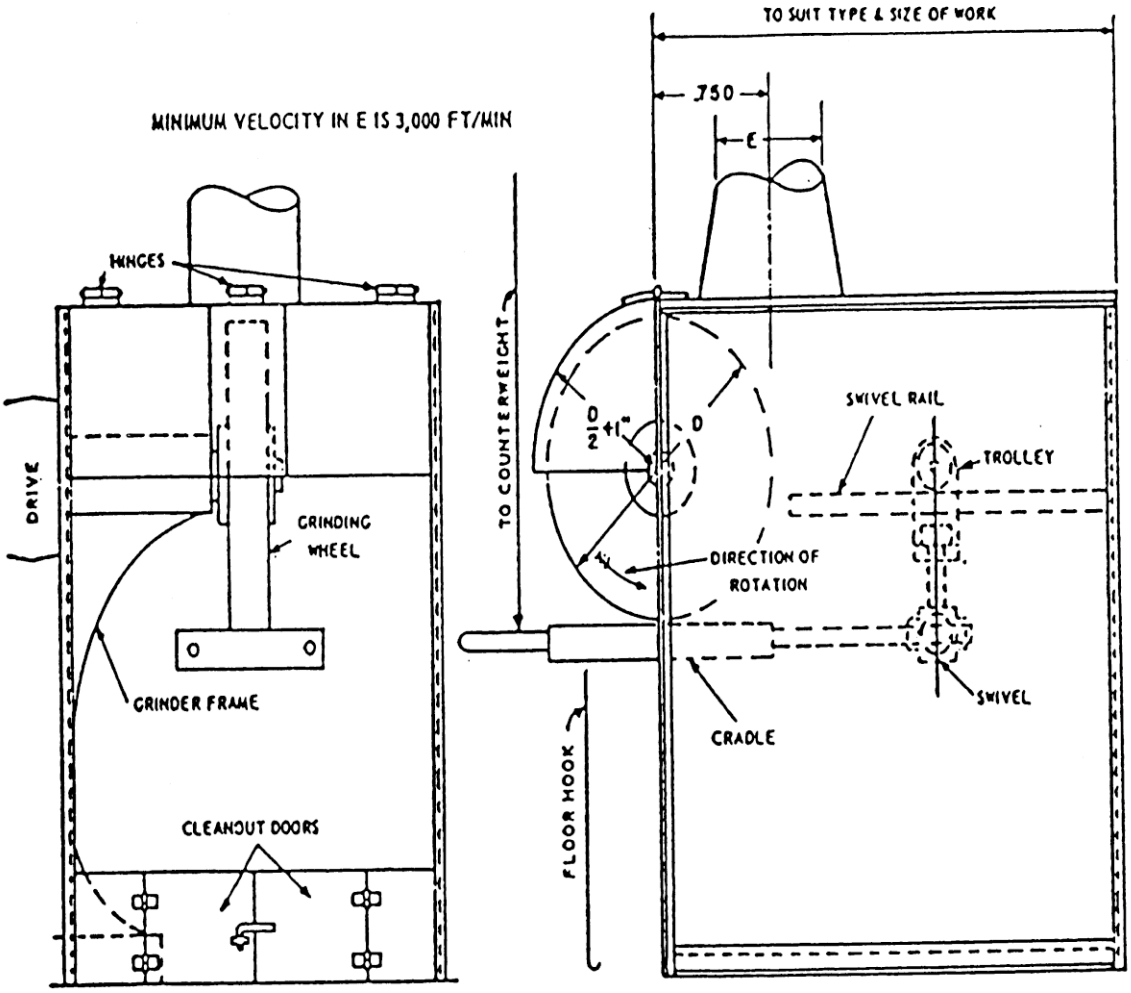

Figure G-5

Cradle Polishing or Grinding Enclosure

Entry loss = 0.45 velocity pressure for tapered takeoff

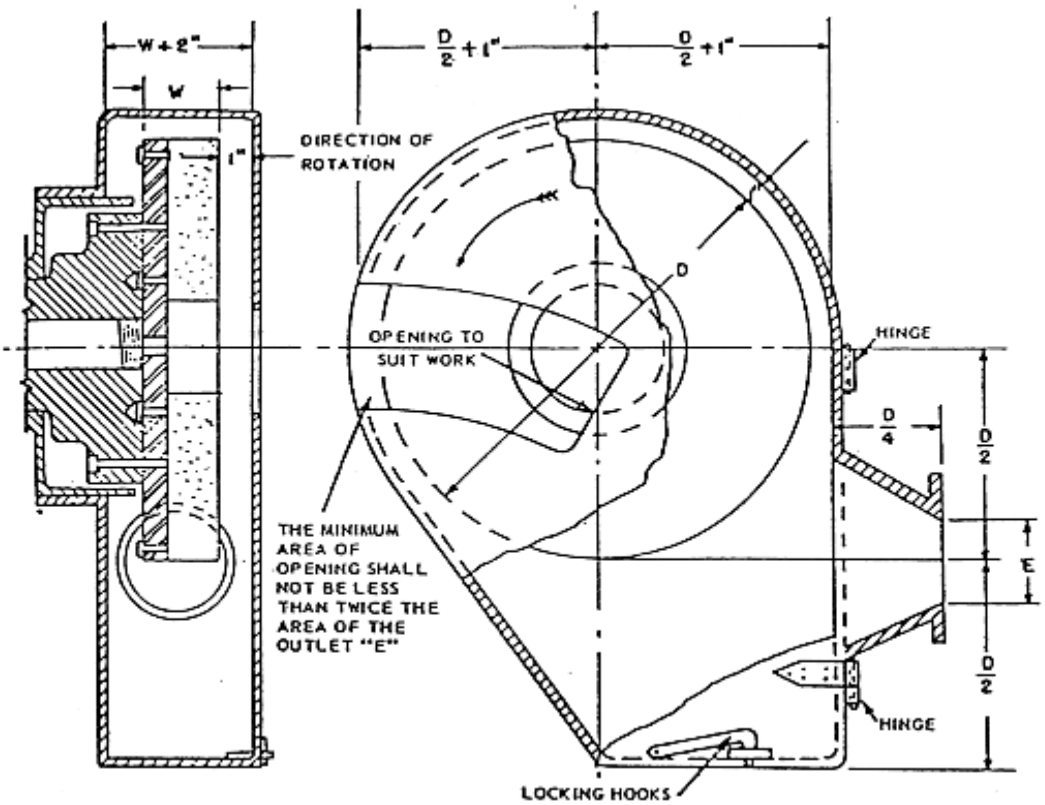

Figure G-6

Horizontal Single-Spindle Disc Grinder Exhaust Hood and Branch Pipe Connections

Dia *D*, inches		Exhaust *E*, dia. inches	Volume exhausted at 4,500 ft/min ft3/min
Min.	Max.		
	12	3	220
Over 12	19	4	390
Over 19	30	5	610
Over 30	36	6	880

Note: If grinding wheels are used for disc grinding purposes, hoods must conform to structural strength and materials as described in 9.1.

Entry loss = 0.45 velocity pressure for tapered takeoff.

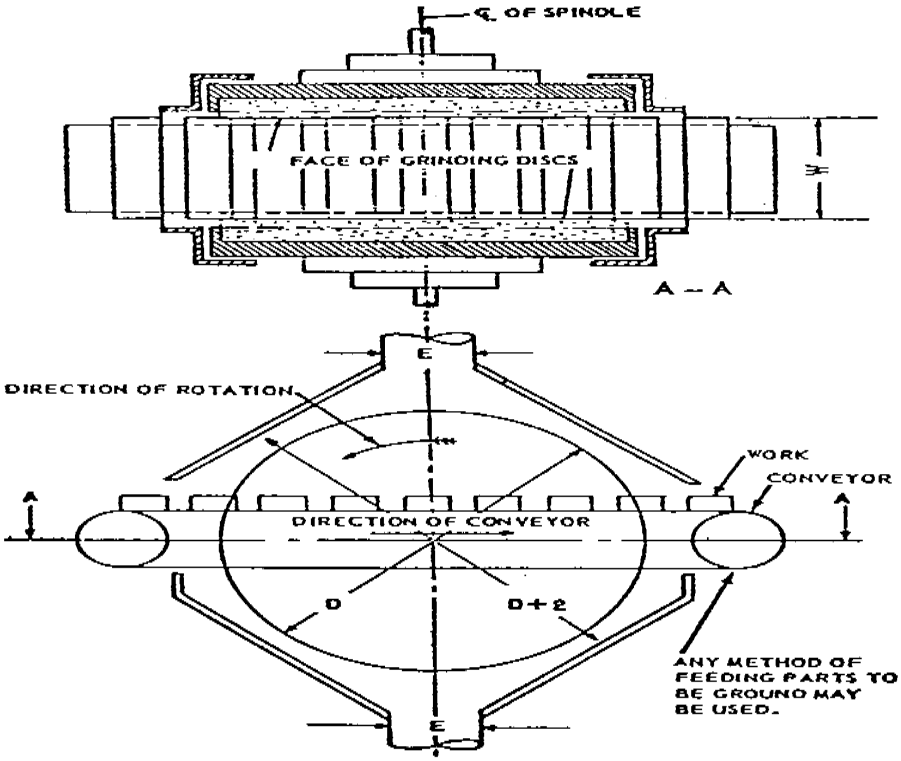

Figure G-7

Horizontal Double-Spindle Disc Grinder Exhaust Hood and Branch Pipe Connections

Disc. dia. inches		Exhaust *E*		Volume exhausted at 4,500 ft/ min ft3/min	Note
Min.	Max.	No Pipes	Dia.		
	19	1	5	610	
Over 19	25	1	6	880	When width "W" permits, exhaust ducts should be as near heaviest grinding as possible.
Over 25	30	1	7	1,200	
Over 30	53	2	6	1,770	
Over 53	72	4	8	6,280	

Entry loss = 0.45 velocity pressure for tapered takeoff.

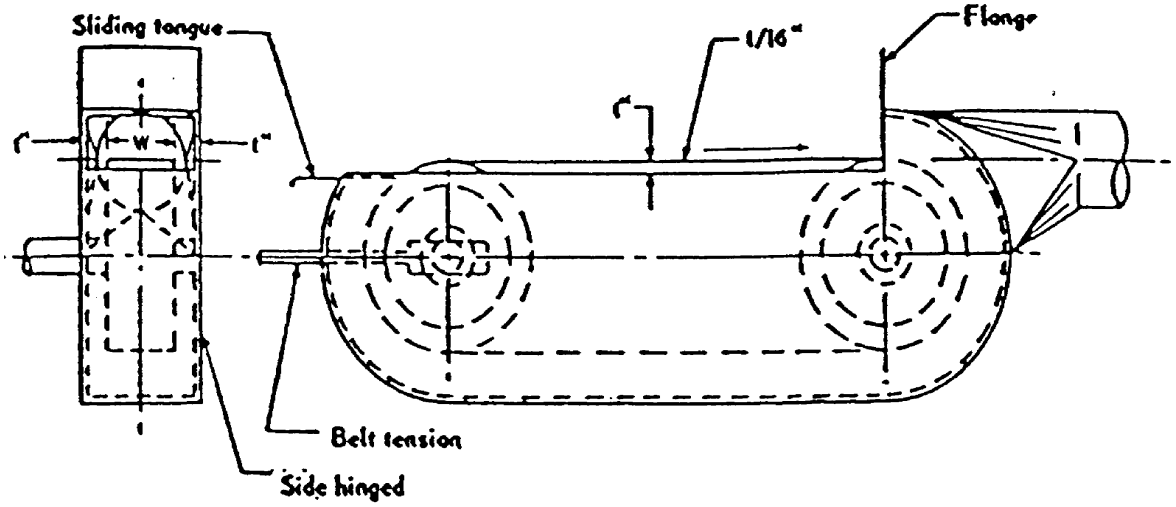

Figure G-8 – A Typical Hood for a Belt Operation

Belt width W. inches	Exhaust volume, ft.1/min
Up to 3.....	220
3 to 5.....	300
5 to 7.....	390
7 to 9.....	500
9 to 11.....	610
11 to 13.....	740

Minimum duct velocity = 4,500 ft/min branch, 3,500 ft/min main.
Entry loss = 0.45 velocity pressure for tapered takeoff; 0.65 velocity pressure for straight takeoff.

(6) Scope. This paragraph (b), prescribes the use of exhaust hood enclosures and systems in removing dust, dirt, fumes, and gases generated through the grinding, polishing, or buffing of ferrous and nonferrous metals.

(c) Removed. In Oregon, 437-002-0107, Spray Finishing, in Division 2/H applies.

(d) Removed.

[39 FR 23502, June 27, 1974, as amended at 40 FR 23073, May 28, 1975; 40 FR 24522, June 9, 1975; 43 FR 49746, Oct. 24, 1978; 49 FR 5322, Feb. 10, 1984; 55 FR 32015, Aug. 6, 1990; 58 FR 35308, June 30, 1993]

Stat. Auth.: ORS 654.025(2) and 656.726(4).
Stats. Implemented: ORS 654.001 through 654.295.
Hist: OR-OSHA Admin. Order 2-1992, f. 2/6/92, ef. 5/1/92 (all except .95).
OR-OSHA Admin. Order 4-1997, f. 4/2/97, ef. 4/2/97.
OR-OSHA Admin. Order 3-1998, f. 7/7/98, ef. 7/7/98.
OR-OSHA Admin. Order 8-1999, f. 8/6/99, ef. 8/6/99
OR-OSHA Admin. Order 3-2003, f. 4/21/03, ef. 4/21/03.
OR-OSHA Admin. Order 7-2008, f. 5/30/08, ef, 5/30/08.
OR-OSHA Admin. Order 2-2010, f. 2/25/10, ef, 2/25/10.
OR-OSHA Admin. Order 1-2012, f. 4/10/12, ef. 4/10/12.

§1910.95 Occupational Noise Exposure.

(a) Protection against the effects of noise exposure shall be provided when the sound levels exceed those shown in Table G-16 when measured on the A scale of a standard sound level meter at slow response. When noise levels are determined by octave band analysis, the equivalent A-weighted sound level may be determined as follows:

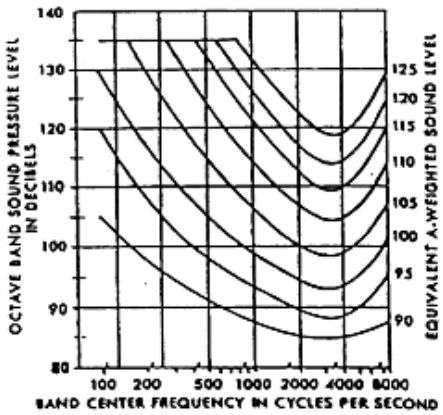

Figure G-9

Equivalent sound level contours. Octave band sound pressure levels may be converted to the equivalent A-weighted sound level by plotting them on this graph and noting the A-weighted sound level corresponding to the point of highest penetration into the sound level contours. This equivalent A-weighted sound level, which may differ from the actual A-weighted sound level of the noise, is used to determine exposure limits from Table 1.G-16.

(b)

(1) When employees are subjected to sound exceeding those listed in Table G-16, feasible administrative or engineering controls shall be utilized. If such controls fail to reduce sound levels within the levels of Table G-16, personal protective equipment shall be provided and used to reduce sound levels within the levels of the table.

(2) If the variations in noise level involve maxima at intervals of 1 second or less, it is to be considered continuous.

Table G-16 – Permissible Noise Exposures [1]

Duration per day, hours	Sound level dBA slow response
8	90
6	92
4	95
3	97
2	100
1 1/2	102
1	105
1/2	110
1/4 or less	115

1 When the daily noise exposure is composed of two or more periods of noise exposure of different levels, their combined effect should be considered, rather than the individual effect of each. If the sum of the following fractions: $C_1/T_1+C_2/T_2\ C_n/T_n$ exceeds unity, then, the mixed exposure should be considered to exceed the limit value. C_n indicates the total time of exposure at a specified noise level, and T_n indicates the total time of exposure permitted at that level.

Exposure to impulsive or impact noise should not exceed 140 dB peak sound pressure level.

(c) Hearing conservation program.

(1) The employer shall administer a continuing, effective hearing conservation program, as described in paragraphs (c) through (o) of this section, whenever employee noise exposures equal or exceed an 8-hour time-weighted average sound level (TWA) of 85 decibels measured on the A scale (slow response) or, equivalently, a dose of 50 percent. For purposes of the hearing conservation program, employee noise exposures shall be computed in accordance with Appendix A and Table G-16a, and without regard to any attenuation provided by the use of personal protective equipment.

(2) For purposes of paragraphs (c) through (n) of this section, an 8-hour time-weighted average of 85 decibels or a dose of 50 percent shall also be referred to as the action level.

(d) Monitoring.

(1) When information indicates that any employee's exposure may equal or exceed an 8-hour time-weighted average of 85 decibels, the employer shall develop and implement a monitoring program.

(i) The sampling strategy shall be designed to identify employees for inclusion in the hearing conservation program and to enable the proper selection of hearing protectors.

(ii) Where circumstances such as high worker mobility, significant variations in sound level, or a significant component of impulse noise make area monitoring generally inappropriate, the employer shall use representative personal sampling to comply with the monitoring requirements of this paragraph unless the employer can show that area sampling produces equivalent results.

(2)

(i) All continuous, intermittent and impulsive sound levels from 80 decibels to 130 decibels shall be integrated into the noise measurements.

(ii) Instruments used to measure employee noise exposure shall be calibrated to ensure measurement accuracy.

(3) Monitoring shall be repeated whenever a change in production, process, equipment or controls increases noise exposures to the extent that:

(i) Additional employees may be exposed at or above the action level; or

(ii) The attenuation provided by hearing protectors being used by employees may be rendered inadequate to meet the requirements of paragraph (j) of this section.

(e) Employee notification. The employer shall notify each employee exposed at or above an 8-hour time-weighted average of 85 decibels of the results of the monitoring.

(f) Observation of monitoring. The employer shall provide affected employees or their representatives with an opportunity to observe any noise measurements conducted pursuant to this section.

(g) Audiometric testing program.

(1) The employer shall establish and maintain an audiometric testing program as provided in this paragraph by making audiometric testing available to all employees whose exposures equal or exceed an 8-hour time-weighted average of 85 decibels.

(2) The program shall be provided at no cost to employees.

NOTE: 1910.95(g)(3) was NOT adopted by OR-OSHA because in Oregon, only CAOHC-certified technicians, audiologists, otolaryngologist or physicians may perform audiometric examinations. In Oregon, OAR 437-002-0095 applies:

437-002-0095 Audiometric Testing in Oregon. *Audiometric tests shall be performed by a licensed or certified audiologist, otolaryngologist, or other physician, or by a technician who is certified by the Council of Accreditation in Occupational Hearing Conservation. A technician who performs audiometric tests must be responsible to an audiologist, otolaryngologist or physician.*

NOTE: *Technicians currently certified by OR-OSHA may continue to use their Oregon certificates until they expire, or until July 1, 1996, whichever occurs first.*

Stat. Auth.: ORS 654.025(2) and ORS 656.726(3).
Hist: OR-OSHA Admin. Order 4-1993, f. 4/1/93, ef. 5/1/93.

(4) All audiograms obtained pursuant to this section shall meet the requirements of Appendix C: Audiometric Measuring Instruments.

(5) Baseline audiogram.

(i) Within 6 months of an employee's first exposure at or above the action level, the employer shall establish a valid baseline audiogram against which subsequent audiograms can be compared.

NOTE: 1910.95(g)(5)(ii) was NOT adopted by OR-OSHA. In Oregon, no exception is made for mobile test vans.

(iii) Testing to establish a baseline audiogram shall be preceded by at least 14 hours without exposure to workplace noise. Hearing protectors may be used as a substitute for the requirement that baseline audiograms be preceded by 14 hours without exposure to workplace noise.

(iv) The employer shall notify employees of the need to avoid high levels of nonoccupational noise exposure during the 14-hour period immediately preceding the audiometric examination.

(6) Annual audiogram. At least annually after obtaining the baseline audiogram, the employer shall obtain a new audiogram for each employee exposed at or above an 8-hour time-weighted average of 85 decibels.

(7) Evaluation of audiogram.

(i) Each employee's annual audiogram shall be compared to that employee's baseline audiogram to determine if the audiogram is valid and if a standard threshold shift as defined in paragraph (g)(10) of this section has occurred. This comparison may be done by a technician.

(ii) If the annual audiogram shows that an employee has suffered a standard threshold shift, the employer may obtain a retest within 30 days and consider the results of the retest as the annual audiogram.

(iii) The audiologist, otolaryngologist, or physician shall review problem audiograms and shall determine whether there is a need for further evaluation. The employer shall provide to the person performing this evaluation the following information:

(A) A copy of the requirements for hearing conservation as set forth in paragraphs (c) through (n) of this section;

(B) The baseline audiogram and most recent audiogram of the employee to be evaluated;

(C) Measurements of background sound pressure levels in the audiometric test room as required in Appendix D: Audiometric Test Rooms.

(D) Records of audiometer calibrations required by paragraph (h)(5) of this section.

(8) Follow-up procedures.

(i) If a comparison of the annual audiogram to the baseline audiogram indicates a standard threshold shift as defined in paragraph (g)(10) of this section has occurred, the employee shall be informed of this fact in writing, within 21 days of the determination.

(ii) Unless a physician determines that the standard threshold shift is not work related or aggravated by occupational noise exposure, the employer shall ensure that the following steps are taken when a standard threshold shift occurs:

(A) Employees not using hearing protectors shall be fitted with hearing protectors, trained in their use and care, and required to use them.

(B) Employees already using hearing protectors shall be refitted and retrained in the use of hearing protectors and provided with hearing protectors offering greater attenuation if necessary.

(C) The employee shall be referred for a clinical audiological evaluation or an otological examination, as appropriate, if additional testing is necessary or if the employer suspects that a medical pathology of the ear is caused or aggravated by the wearing of hearing protectors.

(D) The employee is informed of the need for an otological examination if a medical pathology of the ear that is unrelated to the use of hearing protectors is suspected.

(iii) If subsequent audiometric testing of an employee whose exposure to noise is less than an 8-hour TWA of 90 decibels indicates that a standard threshold shift is not persistent, the employer:

(A) Shall inform the employee of the new audiometric interpretation; and

(B) May discontinue the required use of hearing protectors for that employee.

(9) Revised baseline. An annual audiogram may be substituted for the baseline audiogram when, in the judgment of the audiologist, otolaryngologist or physician who is evaluating the audiogram:

(i) The standard threshold shift revealed by the audiogram is persistent; or

(ii) The hearing threshold shown in the annual audiogram indicates significant improvement over the baseline audiogram.

(10) Standard threshold shift.

(i) As used in this section, a standard threshold shift is a change in hearing threshold relative to the baseline audiogram of an average of 10 dB or more at 2000, 3000, and 4000 Hz in either ear.

NOTE: 1910.95(g)(10)(ii) was NOT adopted by OR-OSHA. In Oregon, no allowance may be made for presbycusis.

(h) Audiometric test requirements.

(1) Audiometric tests shall be pure tone, air conduction, hearing threshold examinations, with test frequencies including as a minimum 500, 1000, 2000, 3000, 4000, and 6000 Hz. Tests at each frequency shall be taken separately for each ear.

(2) Audiometric tests shall be conducted with audiometers (including microprocessor audiometers) that meet the specifications of, and are maintained and used in accordance with, American National Standard Specification for Audiometers, S3.6-1969, which is incorporated by reference as specified in §1910.6.

(3) Pulsed-tone and self-recording audiometers, if used, shall meet the requirements specified in Appendix C: Audiometric Measuring Instruments.

(4) Audiometric examinations shall be administered in a room meeting the requirements listed in Appendix D: Audiometric Test Rooms.

(5) Audiometer calibration.

(i) The functional operation of the audiometer shall be checked before each day's use by testing a person with known, stable hearing thresholds, and by listening to the audiometer's output to make sure that the output is free from distorted or unwanted sounds. Deviations of 10 decibels or greater require an acoustic calibration.

(ii) Audiometer calibration shall be checked acoustically at least annually in accordance with Appendix E: Acoustic Calibration of Audiometers. Test frequencies below 500 Hz and above 6000 Hz may be omitted from this check. Deviations of 15 decibels or greater require an exhaustive calibration.

(iii) An exhaustive calibration shall be performed at least every 2 years in accordance with sections 4.1.2; 4.1.3.; 4.1.4.3; 4.2; 4.4.1; 4.4.2; 4.4.3; and 4.5 of the American National Standard Specification for Audiometers, S3.6-1969. Test frequencies below 500 Hz and above 6000 Hz may be omitted from this calibration.

(i) Hearing protectors.

(1) Employers shall make hearing protectors available to all employees exposed to an 8-hour time-weighted average of 85 decibels or greater at no cost to the employees. Hearing protectors shall be replaced as necessary.

(2) Employers shall ensure that hearing protectors are worn:

(i) By an employee who is required by paragraph (b)(1) of this section to wear personal protective equipment; and

(ii) By any employee who is exposed to an 8-hour time-weighted average of 85 decibels or greater, and who:

NOTE: 1910.95(i)(2)(ii)(A) was NOT adopted by OR-OSHA because 1910.95(g)(5)(ii) was NOT adopted by OR-OSHA.

(B) Has experienced a standard threshold shift.

(3) Employees shall be given the opportunity to select their hearing protectors from a variety of suitable hearing protectors provided by the employer.

(4) The employer shall provide training in the use and care of all hearing protectors provided to employees.

(5) The employer shall ensure proper initial fitting and supervise the correct use of all hearing protectors.

(j) Hearing protector attenuation.

(1) The employer shall evaluate hearing protector attenuation for the specific noise environments in which the protector will be used. The employer shall use one of the evaluation methods described in Appendix B: Methods for Estimating the Adequacy of Hearing Protection Attenuation.

(2) Hearing protectors must attenuate employee exposure at least to an 8-hour time-weighted average of 90 decibels as required by paragraph (b) of this section.

(3) For employees who have experienced a standard threshold shift, hearing protectors must attenuate employee exposure to an 8-hour time-weighted average of 85 decibels or below.

(4) The adequacy of hearing protector attenuation shall be re-evaluated whenever employee noise exposures increase to the extent that the hearing protectors provided may no longer provide adequate attenuation. The employer shall provide more effective hearing protectors where necessary.

(k) Training program.

(1) The employer shall train each employee who is exposed to noise at or above an 8-hour time weighted average of 85 decibels in accordance with the requirements of this section. The employer shall institute a training program and ensure employee participation in the program.

(2) The training program shall be repeated annually for each employee included in the hearing conservation program. Information provided in the training program shall be updated to be consistent with changes in protective equipment and work processes.

(3) The employer shall ensure that each employee is informed of the following:

(i) The effects of noise on hearing;

(ii) The purpose of hearing protectors, the advantages, disadvantages, and attenuation of various types, and instructions on selection, fitting, use, and care; and

(iii) The purpose of audiometric testing, and an explanation of the test procedures.

(l) Access to information and training materials.

(1) The employer shall make available to affected employees or their representatives copies of this standard and shall also post a copy in the workplace.

(2) The employer shall provide to affected employees any informational materials pertaining to the standard that are supplied to the employer by the Assistant Secretary.

(3) The employer shall provide, upon request, all materials related to the employer's training and education program pertaining to this standard to the Assistant Secretary and the Director.

(m) Recordkeeping.

(1) Exposure measurements. The employer shall maintain an accurate record of all employee exposure measurements required by paragraph (d) of this section.

(2) Audiometric tests.

(i) The employer shall retain all employee audiometric test records obtained pursuant to paragraph (g) of this section:

(ii) This record shall include:

(A) Name and job classification of the employee;

(B) Date of the audiogram;

(C) The examiner's name;

(D) Date of the last acoustic or exhaustive calibration of the audiometer; and

(E) Employee's most recent noise exposure assessment.

(F) The employer shall maintain accurate records of the measurements of the background sound pressure levels in audiometric test rooms.

(3) Record retention. The employer shall retain records required in this paragraph (m) for at least the following periods.

(i) Noise exposure measurement records shall be retained for 2 years.

(ii) Audiometric test records shall be retained for the duration of the affected employee's employment.

(4) Access to records. All records required by this section shall be provided upon request to employees, former employees, representatives designated by the individual employee, and the Assistant Secretary. The provisions of 29 CFR 1910.1020(a) through (e) and (g) through (i) apply to access to records under this section.

(5) Transfer of records. If the employer ceases to do business, the employer shall transfer to the successor employer all records required to be maintained by this section, and the successor employer shall retain them for the remainder of the period prescribed in paragraph (m)(3) of this section.

(n) Appendices.

(1) Appendices A, B, C, D, and E to this section are incorporated as part of this section and the contents of these Appendices are mandatory.

NOTE: Appendix F was NOT adopted by OR-OSHA, because it pertains to presbycusis. In Oregon, no allowance is made for presbycusis (hearing loss due to aging).

(2) Appendices F and G to this section are informational and are not intended to create any additional obligations not otherwise imposed or to detract from any existing obligations.

NOTE: 1910.95(o) was NOT adopted by OR-OSHA. In Oregon, this standard applies to ALL industries with no exceptions.

(Approved by the Office of Management and Budget under control number 1218-0048)

Stat. Auth.: ORS 654.025(2) and ORS 656.726(4).
Stats. Implemented: ORS 654.001 through 654.295.
Hist: OR-OSHA Admin. Order 4-1993, f. 4/1/93, ef. 5/1/93.
OR-OSHA Admin. Order 4-1997, f. 4/2/97, ef. 4/2/97.
OR-OSHA Admin. Order 4-2006, f. 7/24/06, ef. 7/24/06.
OR-OSHA Admin. Order 5-2009, f. 5/29/09, ef, 5/29/09.

Appendix A to §1910.95 – Noise Exposure Computation

This Appendix is Mandatory

I. Computation of Employee Noise Exposure.

(1) Noise dose is computed using Table G-16a as follows:

(i) When the sound level, L, is constant over the entire work shift, the noise dose, D, in percent, is given by: D = 100 C/T where C is the total length of the workday, in hours, and T is the reference duration corresponding to the measured sound level, L, as given in Table G-16a or by the formula shown as a footnote to that table.

(ii) When the workshift noise exposure is composed of two or more periods of noise at different levels, the total noise dose over the workday is given by:

$$D = 100\ (C_1/T_1 + C_2/T_2 + \ldots + C_n/T_n),$$

where C_n indicates the total time of exposure at a specific noise level, and T_n indicates the reference duration for that level as given by Table G-16a.

(2) The 8-hour time-weighted average sound level (TWA), in decibels, may be computed from the dose, in percent, by means of the formula: $TWA = 16.61 \log_{10} (D/100) + 90$. For an 8-hour workshift with the noise level constant over the entire shift, the TWA is equal to the measured sound level.

(3) A table relating dose and TWA is given in Section II.

Table G-16a

A-weighted sound level, L (decibel)	Reference duration, T (hour)
80	32
81	27.9
82	24.3
83	21.1
84	18.4
85	16
86	13.9
87	12.1
88	10.6
89	9.2
90	8
91	7.0
92	6.1
93	5.3
94	4.6
95	4
96	3.5
97	3.0
98	2.6
99	2.3
100	2
101	1.7
102	1.5
103	1.3
104	1.1
105	1
106	0.87
107	0.76
108	0.66
109	0.57
110	0.5
111	0.44
112	0.38
113	0.33
114	0.29
115	0.25
116	0.22
117	0.19
118	0.16
119	0.14
120	0.125
121	0.11
122	0.095
123	0.082
124	0.072
125	0.063
126	0.054
127	0.047
128	0.041
129	0.036
130	0.031

In the above table the reference duration, T, is computed by

$$T = \frac{8}{2^{(L - 90)/5}}$$

where L is the measured A-weighted sound level.

II. Conversion Between "Dose" and "8-Hour Time-Weighted Average" Sound Level.

Compliance with paragraphs (c) through (r) of this regulation is determined by the amount of exposure to noise in the workplace. The amount of such exposure is usually measured with an audiodosimeter which gives a readout in terms of "dose." In order to better understand the requirements of the amendment, dosimeter readings can be converted to an "8-hour time-weighted average sound level" (TWA).

In order to convert the reading of a dosimeter into TWA, see Table A-1, below. This table applies to dosimeters that are set by the manufacturer to calculate dose or percent exposure according to the relationships in Table G-16a. So, for example, a dose of 91 percent over an 8-hour day results in a TWA of 89.3 dB, and, a dose of 50 percent corresponds to a TWA of 85 dB.

If the dose as read on the dosimeter is less than or greater than the values found in Table A-1, the TWA may be calculated by using the formula: TWA = 16.61 $\log_{10}$ (D/100) + 90 where TWA = 8-hour time-weighted average sound level and D = accumulated dose in percent exposure.

Table A-1 – Conversion from "Percent Noise Exposure" or "Dose" to "8-Hour Time-Weighted Average Sound Level" (TWA)

Dose or percent noise exposure	TWA	Dose or percent noise exposure	TWA	Dose or percent noise exposure	TWA
10	73.4	117	91.1	520	101.9
15	76.3	118	91.2	530	102.0
20	78.4	119	91.3	540	102.2
25	80.0	120	91.3	550	102.3
30	81.3	125	91.6	560	102.4
35	82.4	130	91.9	570	102.6
40	83.4	135	92.2	580	102.7
45	84.2	140	92.4	590	102.8
50	85.0	145	92.7	600	102.9
55	85.7	150	92.9	610	103.0
60	86.3	155	93.2	620	103.2
65	86.9	160	93.4	630	103.3
70	87.4	165	93.6	640	103.4
75	87.9	170	93.8	650	103.5
80	88.4	175	94.0	660	103.6
81	88.5	180	94.2	670	103.7
82	88.6	185	94.4	680	103.8
83	88.7	190	94.6	690	103.9
84	88.7	195	94.8	700	104.0
85	88.8	200	95.0	710	104.1
86	88.9	210	95.4	720	104.2
87	89.0	220	95.7	730	104.3
88	89.1	230	96.0	740	104.4
89	89.2	240	96.3	750	104.5
90	89.2	250	96.6	760	104.6
91	89.3	260	96.9	770	104.7
92	89.4	270	97.2	780	104.8
93	89.5	280	97.4	790	104.9
94	89.6	290	97.7	800	105.0
95	89.6	300	97.9	810	105.1
96	89.7	310	98.2	820	105.2
97	89.8	320	98.4	830	105.3
98	89.9	330	98.6	840	105.4
99	89.9	340	98.8	850	105.4
100	90.0	350	99.0	860	105.5
101	90.1	360	99.2	870	105.6
102	90.1	370	99.4	880	105.7
103	90.2	380	99.6	890	105.8
104	90.3	390	99.8	900	105.8
105	90.4	400	100.0	910	105.9
106	90.4	410	100.2	920	106.0
107	90.5	420	100.4	930	106.1
108	90.6	430	100.5	940	106.2
109	90.6	440	100.7	950	106.2
110	90.7	450	100.8	960	106.3
111	90.8	460	101.0	970	106.4
112	90.8	470	101.2	980	106.5
113	90.9	480	101.3	990	106.5
114	90.9	490	101.5	999	106.6
115	91.1	500	101.6		
116	91.1	510	101.8		

Stat. Auth.: ORS 654.025(2) and ORS 656.726(3).
Hist: OR-OSHA Admin. Order 4-1993, f. 4/1/93, ef. 5/1/93.

Appendix B to §1910.95 – Methods for Estimating the Adequacy of Hearing Protector Attenuation

This Appendix is Mandatory

For employees who have experienced a significant threshold shift, hearing protector attenuation must be sufficient to reduce employee exposure to a TWA of 85 dB. Employers must select one of the following methods by which to estimate the adequacy of hearing protector attenuation.

The most convenient method is the Noise Reduction Rating (NRR) developed by the Environmental Protection Agency (EPA). According to EPA regulation, the NRR must be shown on the hearing protector package. The NRR is then related to an individual worker's noise environment in order to assess the adequacy of the attenuation of a given hearing protector. This Appendix describes four methods of using the NRR to determine whether a particular hearing protector provides adequate protection within a given exposure environment. Selection among the four procedures is dependent upon the employer's noise measuring instruments.

Instead of using the NRR, employers may evaluate the adequacy of hearing protector attenuation by using one of the three methods developed by the National Institute for Occupational Safety and Health (NIOSH), which are described in the "List of Personal Hearing Protectors and Attenuation Data," HEW Publication No. 76-120, 1975, pages 21 through 37. These methods are known as NIOSH methods #1, #2 and #3. The NRR described below is a simplification of NIOSH method #2. The most complex method is NIOSH method #1, which is probably the most accurate method since it uses the largest amount of spectral information from the individual employee's noise environment. As in the case of the NRR method described below, if one of the NIOSH methods is used, the selected method must be applied to an individual's noise environment to assess the adequacy of the attenuation. Employers should be careful to take a sufficient number of measurements in order to achieve a representative sample for each time segment.

NOTE: The employer must remember that calculated attenuation values reflect realistic values only to the extent that the protectors are properly fitted and worn.

When using the NRR to assess hearing protector adequacy, one of the following methods must be used:

(i) When using a dosimeter that is capable of C-weighted measurements:

(A) Obtain the employee's C-weighted dose for the entire workshift, and convert to TWA (see Appendix A, II).

(B) Subtract the NRR from the C-weighted TWA to obtain the estimated A-weighted TWA under the ear protector.

(ii) When using a dosimeter that is not capable of C-weighted measurements, the following method may be used:

(A) Convert the A-weighted dose to TWA (see Appendix A).

(B) Subtract 7 dB from the NRR.

(C) Subtract the remainder from the A-weighted TWA to obtain the estimated A-weighted TWA under the ear protector.

(iii) When using a sound level meter set to the A-weighting network:

(A) Obtain the employee's A-weighted TWA.

(B) Subtract 7 dB from the NRR, and subtract the remainder from the A-weighted TWA to obtain the estimated A-weighted TWA under the ear protector.

(iv) When using a sound level meter set on the C-weighting network:

(A) Obtain a representative sample of the C-weighted sound levels in the employee's environment.

(B) Subtract the NRR from the C-weighted average sound level to obtain the estimated A-weighted TWA under the ear protector.

(v) When using area monitoring procedures and a sound level meter set to the A-weighing network.

(A) Obtain a representative sound level for the area in question.

(B) Subtract 7 dB from the NRR and subtract the remainder from the A-weighted sound level for that area.

(vi) When using area monitoring procedures and a sound level meter set to the C-weighting network:

(A) Obtain a representative sound level for the area in question.

(B) Subtract the NRR from the C-weighted sound level for that area.

Stat. Auth.: ORS 654.025(2) and ORS 656.726(3).
Hist: OR-OSHA Admin. Order 4-1993, f. 4/1/93, ef. 5/1/93.

Appendix C to §1910.95 – Audiometric Measuring Instruments

This Appendix is Mandatory

1. In the event that pulsed-tone audiometers are used, they shall have a tone on-time of at least 200 milliseconds.

2. Self-recording audiometers shall comply with the following requirements:

(A) The chart upon which the audiogram is traced shall have lines at positions corresponding to all multiples of 10 dB hearing level within the intensity range spanned by the audiometer. The lines shall be equally spaced and shall be separated by at least 1/4-inch. Additional increments are optional. The audiogram pen tracings shall not exceed 2 dB in width.

(B) It shall be possible to set the stylus manually at the 10-dB increment lines for calibration purposes.

(C) The slewing rate for the audiometer attenuator shall not be more than 6 dB/sec except that an initial slewing rate greater than 6 dB/sec is permitted at the beginning of each new test frequency, but only until the second subject response.

(D) The audiometer shall remain at each required test frequency for 30 seconds (±3 seconds). The audiogram shall be clearly marked at each change of frequency and the actual frequency change of the audiometer shall not deviate from the frequency boundaries marked on the audiogram by more than ±3 seconds.

(E) It must be possible at each test frequency to place a horizontal line segment parallel to the time axis on the audiogram, such that the audiometric tracing crosses the line segment at least six times at that test frequency. At each test frequency the threshold shall be the average of the midpoints of the tracing excursions.

Stat. Auth.: ORS 654.025(2) and ORS 656.726(3).
Hist: OR-OSHA Admin. Order 4-1993, f. 4/1/93, ef. 5/1/93.

Appendix D to §1910.95 – Audiometric Test Rooms

This Appendix is Mandatory

Rooms used for audiometric testing shall not have background sound pressure levels exceeding those in Table D1 when measured by equipment conforming at least to the Type 2 requirements of American National Standard Specification for Sound Level Meters, S1.4-1971 (R1976), and to the Class II requirements of American National Standard Specification for Octave, Half-Octave, and Third-Octave Band Filter Sets, S1.11-1971 (R1976).

Table D-1 – Maximum Allowable Octave-Band Sound Pressure Levels for Audiometric Test Rooms

Octave-band center frequency (Hz)	500	1000	2000	4000	8000
Sound pressure level (dB)	40	40	47	57	62

Stat. Auth.: ORS 654.025(2) and ORS 656.726(3).
Hist: OR-OSHA Admin. Order 4-1993, f. 4/1/93, ef. 5/1/93.

Appendix E to §1910.95 – Acoustic Calibration of Audiometers

This Appendix is Mandatory

Audiometer calibration shall be checked acoustically, at least annually, according to the procedures described in this Appendix. The equipment necessary to perform these measurements is a sound level meter, octave-band filter set, and a National Bureau of Standards 9A coupler. In making these measurements, the accuracy of the calibrating equipment shall be sufficient to determine that the audiometer is within the tolerances permitted by American Standard Specification for Audiometers, S3.6-1969.

(1) Sound Pressure Output Check.

A. Place the earphone coupler over the microphone of the sound level meter and place the earphone on the coupler.

B. Set the audiometer's hearing threshold level (HTL) dial to 70 dB.

C. Measure the sound pressure level of the tones at each test frequency from 500 Hz through 6000 Hz for each earphone.

D. At each frequency the readout on the sound level meter should correspond to the levels in Table E-1 or Table E-2, as appropriate, for the type of earphone, in the column entitled "sound level meter reading."

(2) Linearity Check.

A. With the earphone in place, set the frequency to 1000 Hz and the HTL dial on the audiometer to 70 dB.

B. Measure the sound levels in the coupler at each 10-dB decrement from 70 dB to 10 dB, noting the sound level meter reading at each setting.

C. For each 10-dB decrement on the audiometer the sound level meter should indicate a corresponding 10 dB decrease.

D. This measurement may be made electrically with a voltmeter connected to the earphone terminals.

(3) Tolerances.

When any of the measured sound levels deviate from the levels in Table E-1 or Table E-2 by ±3 dB at any test frequency between 500 and 3000 Hz, 4 dB at 4000 Hz, or 5 dB at 6000 Hz, an exhaustive calibration is advised. An exhaustive calibration is required if the deviations are greater than 15 dB or greater at any test frequency.

Table E-1 – Reference Threshold Levels for Telephonics – TDH-39 Earphones		
Frequency, Hz	Reference threshold level for TDH-39 earphones, dB	Sound level meter reading, dB
500	11.5	81.5
1000	7	77
2000	9	79
3000	10	80
4000	9.5	79.5
6000	15.5	85.5

Table E-2 – Reference Threshold Levels for Telephonics – TDH-49 Earphones		
Frequency, Hz	Reference threshold level for TDH-49 earphones, dB	Sound level meter reading, dB
500	13.5	83.5
1000	7.5	77.5
2000	11	81.0
3000	9.5	79.5
4000	10.5	80.5
6000	13.5	83.5

Stat. Auth.: ORS 654.025(2) and ORS 656.726(3).
Hist: OR-OSHA Admin. Order 4-1993, f. 4/1/93, ef. 5/1/93.

NOTE: Appendix F was NOT adopted by OR-OSHA, because it pertains to presbycusis. In Oregon, no allowance is made for presbycusis (hearing loss due to aging) for purposes of this rule. However, you may use presbycusis for purposes of the OSHA 300 Log of Injuries and Illnesses. See Division 1 for more information.

Appendix G to §1910.95 – Monitoring Noise Levels
Non-Mandatory Informational Appendix

This appendix provides information to help employers comply with the noise monitoring obligations that are part of the hearing conservation amendment.

What is the purpose of noise monitoring?

This revised amendment requires that employees be placed in a hearing conservation program if they are exposed to average noise levels of 85 dB or greater during an 8-hour workday. In order to determine if exposures are at or above this level, it may be necessary to measure or monitor the actual noise levels in the workplace and to estimate the noise exposure or "dose" received by employees during the workday.

When is it necessary to implement a noise monitoring program?

It is not necessary for every employer to measure workplace noise. Noise monitoring or measuring must be conducted only when exposures are at or above 85 dB. Factors which suggest that noise exposures in the workplace may be at this level include employee complaints about the loudness of noise, indications that employees are losing their hearing, or noisy conditions which make normal conversation difficult. The employer should also consider any information available regarding noise emitted from specific machines. In addition, actual workplace noise measurements can suggest whether or not a monitoring program should be initiated.

How is noise measured?

Basically, there are two different instruments to measure noise exposures: the sound level meter and the dosimeter. A sound level meter is a device that measures the intensity of sound at a given moment. Since sound level meters provide a measure of sound intensity at only one point in time, it is generally necessary to take a number of measurements at different times during the day to estimate noise exposure over a workday. If noise levels fluctuate, the amount of time noise remains at each of the various measured levels must be determined.

To estimate employee noise exposures with a sound level meter it is also generally necessary to take several measurements at different locations within the workplace. After appropriate sound level meter readings are obtained, people sometimes draw "maps" of the sound levels within different areas of the workplace. By using a sound level "map" and information on employee locations throughout the day, estimates of individual exposure levels can be developed. This measurement method is generally referred to as *area* noise monitoring.

A dosimeter is like a sound level meter except that it stores sound level measurements and integrates these measurements over time, providing an average noise exposure reading for a given period of time, such as an 8-hour workday. With a dosimeter, a microphone is attached to the employee's clothing and the exposure measurement is simply read at the end of the desired time period. A reader may be used to read-out the dosimeter's measurements. Since the dosimeter is worn by the employee, it measures noise levels in those locations in which the employee travels. A sound level meter can also be positioned within the immediate vicinity of the exposed worker to obtain an individual exposure estimate. Such procedures are generally referred to as *personal* noise monitoring.

Area monitoring can be used to estimate noise exposure when the noise levels are relatively constant and employees are not mobile. In workplaces where employees move about in different areas or where the noise intensity tends to fluctuate over time, noise exposure is generally more accurately estimated by the personal monitoring approach.

In situations where personal monitoring is appropriate, proper positioning of the microphone is necessary to obtain accurate measurements. With a dosimeter, the microphone is generally located on the shoulder and remains in that position for the entire workday. With a sound level meter, the microphone is stationed near the employee's head, and the instrument is usually held by an individual who follows the employee as he or she moves about.

Manufacturer's instructions, contained in dosimeter and sound level meter operating manuals, should be followed for calibration and maintenance. To ensure accurate results, it is considered good professional practice to calibrate instruments before and after each use.

How often is it necessary to monitor noise levels?

The amendment requires that when there are significant changes in machinery or production processes that may result in increased noise levels, remonitoring must be conducted to determine whether additional employees need to be included in the hearing conservation program. Many companies choose to remonitor periodically (once every year or two) to ensure that all exposed employees are included in their hearing conservation programs.

Where can equipment and technical advice be obtained?

Noise monitoring equipment may be either purchased or rented. Sound level meters cost about $500 to $1,000, while dosimeters range in price from about $750 to $1,500. Smaller companies may find it more economical to rent equipment rather than to purchase it. Names of equipment suppliers may be found in the telephone book (Yellow Pages) under headings such as: "Safety Equipment," "Industrial Hygiene," or "Engineers – Acoustical." In addition to providing information on obtaining noise monitoring equipment, many companies and individuals included under such listings can provide professional advice on how to conduct a valid noise monitoring program. Some audiological testing firms and industrial hygiene firms also provide noise monitoring services. Universities with audiology, industrial hygiene, or acoustical engineering departments may also provide information or may be able to help employers meet their obligations under this amendment.

Free, on-site assistance may be obtained from OSHA-supported state and private consultation organizations. These safety and health consultative entities generally give priority to the needs of small businesses.

NOTE: In Oregon, free on-site assistance may be obtained from the Consultative Section, Oregon Occupational Safety and Health Division (OR-OSHA), Department of Consumer and Business Services, 350 Winter St NE, Salem, OR 97310. Telephone (503) 378-3272.

Stat. Auth.: ORS 654.025(2) and ORS 656.726(3).
Hist: OR-OSHA Admin. Order 4-1993, f. 4/1/93, ef. 5/1/93.
OR-OSHA Admin. Order 4-1997, f. 4/2/97 ef. 4/2/97.

Appendix H to §1910.95 – Availability of Referenced Documents

Paragraphs (c) through (o) of 29 CFR 1910.95 and the accompanying appendices contain provisions which incorporate publications by reference. Generally, the publications provide criteria for instruments to be used in monitoring and audiometric testing. These criteria are intended to be mandatory when so indicated in the applicable paragraphs of §1910.95 and appendices.

It should be noted that OSHA does not require that employers purchase a copy of the referenced publications. Employers, however, may desire to obtain a copy of the referenced publications for their own information.

The designation of the paragraph of the standard in which the referenced publications appear, the titles of the publications, and the availability of the publications are as follows:

Paragraph designation	Referenced publication	Available from –
Appendix B	"List of Personal Hearing Protectors and Attenuation Data," HEW Pub. No. 76-120, 1975. NTIS-PB267461.	National Technical Information Service, Port Royal Road, Springfield, VA 22161.
Appendix D	"Specification for Sound Level Meters," S1.4-1971 (R1976).	American National Standards Institute, Inc., 1430 Broadway, New York, NY 10018.
§1910.95(k)(2), Appendix E	"Specifications for Audiometers," S3.6-1969.	American National Standards Institute, Inc., 1430 Broadway, New York, NY 10018.
Appendix D	"Specification for Octave, Half-Octave and Third-Octave Band Filter Sets," S1.11-1971 (R1976).	Back Numbers Department, Dept STD, American Institute of Physics, 333 E 45th St, New York, NY 10017; American National Standards Institute, Inc., 1430 Broadway, New York, NY 10018.

The referenced publications (or a microfiche of the publications) are available for review at many universities and public libraries throughout the country. These publications may also be examined at the OSHA Technical Data Center, Room N2439, United States Department of Labor, 200 Constitution Avenue NW, Washington, DC 20210, (202) 219-7500 or at any OSHA Regional Office (see telephone directories under United States Government – Labor Department).

Stat. Auth.: ORS 654.025(2) and ORS 656.726(3).
Hist: OR-OSHA Admin. Order 4-1993, f. 4/1/93, ef. 5/1/93.
OR-OSHA Admin. Order 4-1997, f. 4/2/97 ef. 4/2/97.

Appendix I to §1910.95 – Definitions

These definitions apply to the following terms as used in paragraphs (c) through (n) of 29 CFR 1910.95.

Action level – An 8-hour time-weighted average of 85 decibels measured on the A-scale, slow response, or equivalently, a dose of fifty percent.

Audiogram – A chart, graph, or table resulting from an audiometric test showing an individual's hearing threshold levels as a function of frequency.

Audiologist – A professional, specializing in the study and rehabilitation of hearing, who is certified by the American Speech-Language-Hearing Association or licensed by a state board of examiners.

Baseline audiogram – The audiogram against which future audiograms are compared.

Criterion sound level – A sound level of 90 decibels.

Decibel (dB) – Unit of measurement of sound level.

Hertz (Hz) – Unit of measurement of frequency, numerically equal to cycles per second.

Medical pathology – A disorder or disease. For purposes of this regulation, a condition or disease affecting the ear, which should be treated by a physician specialist.

Noise dose – The ratio, expressed as a percentage, of (1) the time integral, over a stated time or event, of the 0.6 power of the measured SLOW exponential time-averaged, squared A-weighted sound pressure and (2) the product of the criterion duration (8 hours) and the 0.6 power of the squared sound pressure corresponding to the criterion sound level (90 dB).

Noise dosimeter – An instrument that integrates a function of sound pressure over a period of time in such a manner that it directly indicates a noise dose.

Otolaryngologist – A physician specializing in diagnosis and treatment of disorders of the ear, nose and throat.

Representative exposure – Measurements of an employee's noise dose or 8-hour time-weighted average sound level that the employers deem to be representative of the exposures of other employees in the workplace.

Sound level – Ten times the common logarithm of the ratio of the square of the measured A-weighted sound pressure to the square of the standard reference pressure of 20 micropascals. Unit: decibels (dB). For use with this regulation, SLOW time response, in accordance with ANSI S1.4-1971 (R1976), is required.

Sound level meter – An instrument for the measurement of sound level.

Time-weighted average sound level – That sound level, which if constant over an 8-hour exposure, would result in the same noise dose as is measured.

(Approved by the Office of Management and Budget under control number 1218-0048)

[39 FR 23502, June 27, 1974, as amended at 46 FR 4161, Jan. 16, 1981; 46 FR 62845, Dec. 29, 1981; 48 FR 9776, Mar. 8, 1983; 48 FR 29687, June 28, 1983; 54 FR 24333, June 7, 1989]

Stat. Auth.: ORS 654.025(2) and ORS 656.726(3).
Hist: OR-OSHA Admin. Order 4-1993, f. 4/1/93, ef. 5/1/93.

§1910.96 Ionizing Radiation. Redesignated as §1910.1096.

§1910.97 Nonionizing Radiation.

(a) Electromagnetic radiation.

(1) Definitions applicable to this paragraph.

(i) The term **"electromagnetic radiation"** is restricted to that portion of the spectrum commonly defined as the radio frequency region, which for the purpose of this specification shall include the microwave frequency region.

(ii) Partial body irradiation. Pertains to the case in which part of the body is exposed to the incident electromagnetic energy.

(iii) Radiation protection guide. Radiation level which should not be exceeded without careful consideration of the reasons for doing so.

(iv) The word **"symbol"** as used in this specification refers to the overall design, shape, and coloring of the rf radiation sign shown in Figure G-11.

(v) Whole body irradiation. Pertains to the case in which the entire body is exposed to the incident electromagnetic energy or in which the cross section of the body is smaller than the cross section of the incident radiation beam.

(2) Radiation protection guide.

(i) For normal environmental conditions and for incident electromagnetic energy of frequencies from 10 MHZ to 100 GHz, the radiation protection guide is 10 mW/cm.^{2} (milliwatt per square centimeter) as averaged over any possible 0.1-hour period. This means the following:

Power density: 10 mW./cm.^{2} for periods of 0.1-hour or more.

Energy density: 1 mW.-hr./cm.^{2} (milliwatt hour per square centimeter) during any 0.1-hour period.

This guide applies whether the radiation is continuous or intermittent.

(ii) These formulated recommendations pertain to both whole body irradiation and partial body irradiation. Partial body irradiation must be included since it has been shown that some parts of the human body (e.g., eyes, testicles) may be harmed if exposed to incident radiation levels significantly in excess of the recommended levels.

(3) Warning symbol.

(i) The warning symbol for radio frequency radiation hazards shall consist of a red isosceles triangle above an inverted black isosceles triangle, separated and outlined by an aluminum color border. The words “Warning – Radio-Frequency Radiation Hazard” shall appear in the upper triangle. See Figure G-11.

(ii) American National Standard Safety Color Code for Marking Physical Hazards and the Identification of Certain Equipment, Z53.1-1953, which is incorporated by reference as specified in §1910.6, shall be used for color specification. All lettering and the border shall be of aluminum color.

(iii) The inclusion and choice of warning information or precautionary instructions is at the discretion of the user. If such information is included it shall appear in the lower triangle of the warning symbol.

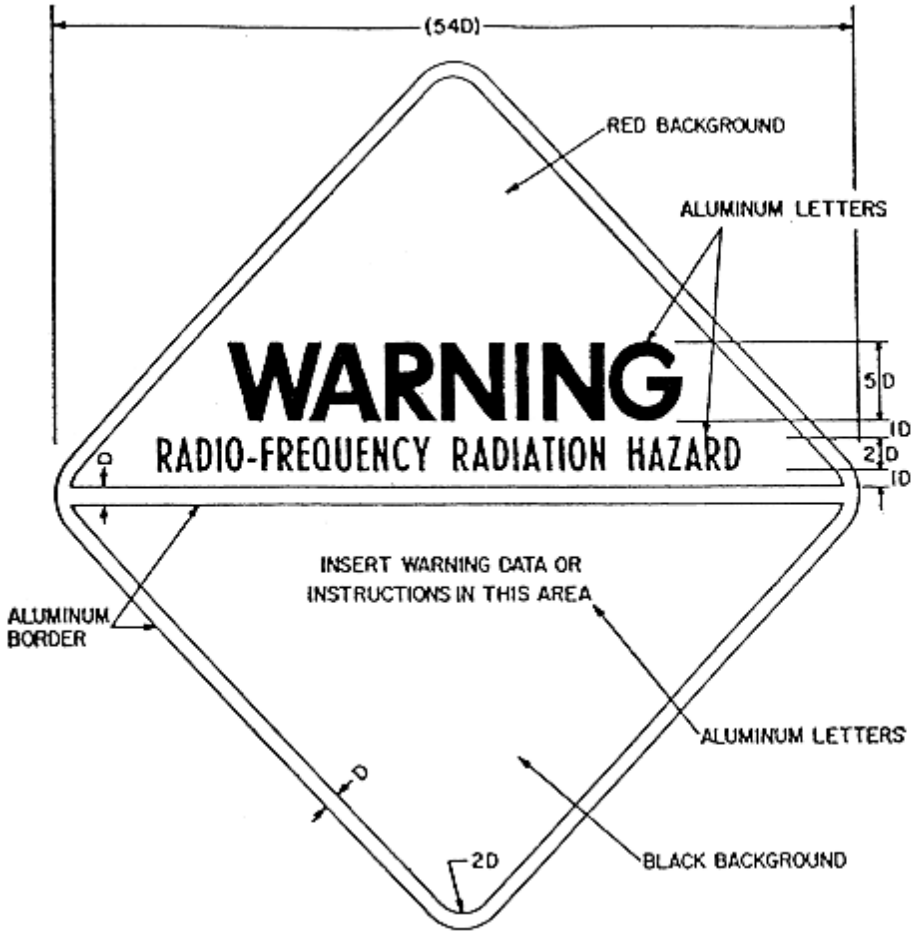

1. Place handling and mounting instructions on reverse side.
2. D = Scaling unit.
3. Lettering: Ratio of letter height to thickness of letter lines.

Upper triangle:	5 to 1	Large
	6 to 1	Medium
Lower triangle:	4 to 1	Small
	6 to 1	Medium

4. Symbol is square, triangles are right-angle isosceles.

Figure G-11

Radio-Frequency Radiation Hazard Warning Symbol

(4) Scope. This section applies to all radiations originating from radio stations, radar equipment, and other possible sources of electromagnetic radiation such as used for communication, radio navigation, and industrial and scientific purposes. This section does not apply to the deliberate exposure of patients by, or under the direction of, practitioners of the healing arts.

[39 FR 23502, June 27, 1974]

Stat. Auth.: ORS 654.025(2) and 656.726(3).
Stats. Implemented: ORS 654.001 through 654.295.
Hist: OR-OSHA Admin. Order 2-1992, f. 2/6/92, ef. 5/1/92.
OR-OSHA Admin. Order 4-1997, f. 4/2/97, ef 4/2/97.

§1910.98 Effective Dates.

(a) The provisions of this Subpart G shall become effective on August 27, 1971, except as provided in the remaining paragraphs of this section.

(b) The following provisions shall become effective on February 15, 1972:

§1910.94(a)(2)(iii), (a)(3), (a)(4), (b), (c)(2), (c)(3), (c)(4), (c)(5), (c)(6)(i), (c)(6)(ii), (d)(1)(ii), (d)(3), (d)(4), (d)(5), and (d)(7).

(c) Notwithstanding anything in paragraph (a), (b), or (d) of this section, any provision in any other section of this subpart which contains in itself a specific effective date or time limitation shall become effective on such date or shall apply in accordance with such limitation.

(d) Notwithstanding anything in paragraph (a) of this section, if any standard in 41 CFR Part 50-204, other than a national consensus standard incorporated by reference in §50-204.2 (a)(1), is or becomes applicable at any time to any employment and place of employment, by virtue of the Walsh-Healey Public Contracts Act, or the Service Contract Act of 1965, or the National Foundation on Arts and Humanities Act of 1965, any corresponding established Federal standard in this Subpart G which is derived from 41 CFR Part 50-204 shall also become effective, and shall be applicable to such employment and place of employment, on the same date.

Stat. Auth.: ORS 654.025(2) and 656.726(3).
Hist: OR-OSHA Admin. Order 2-1992 f. 2/6/92, ef. 5/1/92.

– END OF DOCUMENT –