Oregon Administrative Rules

Chapter 437

Division 4

Agriculture

4

Administrative Order 2-2018

osha.oregon.gov

The Oregon Department of Consumer and Business Services adopted these rules pursuant to ORS 654.025(2).

The Secretary of State designated OAR Chapter 437 as the "Oregon Occupational Safety and Health Code." Six general subject areas within this code are designated as "Divisions."

- **Division 1** General Administrative Rules
- **Division 2** General Occupational Safety and Health Rules
- **Division 3** Construction
- **Division 4** Agriculture
- **Division 5** Maritime Activities
- **Division 7** Forest Activities
- **Oregon Revised Statutes (ORS) 654** The Oregon Safe Employment Act (OSEAct)

Oregon-initiated rules in this division of the Oregon Occupational Safety and Health Code are numbered in a uniform system developed by the Secretary of State. This system does not number the rules in sequence (001, 002, 003, etc.). Omitted numbers may be assigned to new rules at the time of their adoption.

Oregon-initiated rules are arranged in the following Basic Codification Structure adopted by the Secretary of State for Oregon Administrative Rules (OAR):

Chapter	Division	Rule	Section	Subsection	Paragraphs
437	*004*	*0150*	*(1)*	*(a)*	*(A)(i)(I)*

The majority of Oregon OSHA rules are adopted by reference from the Code of Federal Regulations (CFR), and are arranged in the following basic federal numbering system:

Chapter	Division	Part	Subpart (Subdivision)	Section	Paragraphs
437	004	1928	M	.1027	(a)(1)(i)(A)*(1)*

The terms "subdivision" and "subpart" are synonymous within OAR 437, Oregon Occupational Safety and Health Code.

To obtain an order form or copies of these codes, address:

Department of Consumer & Business Services
Oregon Occupational Safety & Health Division (Oregon OSHA)
350 Winter St. NE
Salem, OR 97301-3882

Or call the Oregon OSHA Resource Library at 503-378-3272

The rules referenced in this division are available for viewing in the Office of the Secretary of State, Oregon State Archives Building, Salem, Oregon, or the Central Office, Oregon Occupational Safety and Health Division of the Department of Consumer and Business Services, 350 Winter St. NE, Salem, Oregon, and on our web site at osha.oregon.gov.

Table of Contents for Division 4

Historical Notes for Division 4 11

Subdivision A, General Subjects

437-004-0001 Application A-1
437-004-0002 Scope A-1
437-004-0003 Exclusive Coverage A-2
437-004-0005 Access to Employee Exposure and Medical Records A-2
437-004-0099 General Standards A-3

Subdivision B, Definitions

437-004-0100 Universal Definitions B-1
437-004-0150 Standards Organizations B-7

Subdivision C, Safety Committees

437-004-0240 Safety Orientation for Seasonal Workers C-1
437-004-0251 Safety Committees and Safety Meetings C-2

Subdivision D, Work Surfaces

437-004-0310 Working Surfaces D-1
437-004-0320 Guarding Floor and Wall Openings and Holes D-2
437-004-0330 Fixed Industrial Stairs D-8
437-004-0340 Portable Ladders D-11
437-004-0350 Orchard Ladders D-17
437-004-0360 Fixed Ladders D-18
437-004-0370 Scaffolding D-29
437-004-0380 Manually Propelled Mobile Ladder Stands and Scaffolds (Towers) D-39

437-004-0390 Other Working Surfaces D-40

Subdivision E, Exits/Plans

437-004-0405 Exits and Emergency Action Plan E-1
437-004-0450 Emergency Action Plan E-2

Subdivision F, Manlifts

437-004-0570 Manlifts F-1

Subdivision G, Health-Environment

437-004-0610 Ventilation G-1
437-004-0630 Noise Exposure..... G-1
437-004-0650 Ionizing Radiation G-6

Subdivision H, Hazardous Materials

437-004-0710 Compressed Gases..... H-1
437-004-0715 Acetylene..... H-2
437-004-0716 Oxygen..... H-2
437-004-0717 Hydrogen..... H-7
437-004-0720 Flammable Liquids H-7
437-004-0725 Spray Finishing.....H-15
437-004-0770 Explosives and Blasting Agents.....H-17
437-004-0780 Storage and Handling of Liquefied Petroleum Gases H-17
437-004-0790 Use of Liquefied Petroleum Gas or Natural Gas in Fields and Orchards.....H-68
437-004-0800 Storage and Handling of Anhydrous Ammonia H-69
437-004-0950 Hazardous Waste Operations and Emergency Response.....H-89

Subdivision I, Protective Equipment

437-004-1005 General Requirements I-1
437-004-1020 Personal Fall Protection I-4
437-004-1030 Work Clothing I-6
437-004-1035 Eye and Face Protection I-7
437-004-1041 Respiratory Protection I-8
Appendix A - Fit Testing Procedures (Mandatory) I-27
Appendix B-1 - User Seal Check Procedures (Mandatory) I-47
Appendix B-2 - Respirator Cleaning Procedures (Mandatory) I-49
Appendix C - Respirator Medical Evaluation Questionnaire (Mandatory) - English I-51
Apendice C - Cuestionario De Evaluacion Medica Respiratoria (Obligatorio) - Spanish I-59
Appendix D - Information for Employees Voluntarily Using Respirators (Mandatory) - English I-67
Apendice D - Informacion Para Trabajadores Que Usan Respiradores Voluntariamente (Obligatorio) - Spanish I-69
437-004-1050 Head Protection I-71
437-004-1060 Hand and Foot Protection I-71
437-004-1070 Working Underway on Water I-73
437-004-1075 Working Over or in Water I-74
Appendix A to Subdivision I - Non mandatory Sample Hazard Assessment for Personal Protective Equipment (PPE) I-75

Subdivision J, Work Environment

437-004-1105 Sanitation J-1
437-004-1110 Field Sanitation for Hand Labor Work J-4
437-004-1120 Agricultural Labor Housing and Related Facilities J-7
437-004-1140 Lighting J-26
437-004-1150 Safety Colors for Marking Physical Hazards J-26
437-004-1180 Accident Prevention Signs J-26

437-004-1250 Confined and Hazardous Spaces J-29
437-004-1260 Manure Lagoons, Storage Ponds, Vats, Pits and Separators J-32
437-004-1275 The Control of Hazardous Energy (Lockout/Tagout)..... J-34
Appendix A J-43

Subdivision K, Medical/First Aid

437-004-1305 Medical Services and First Aid..... K-1

Subdivision L, Fire

437-004-1430 Sources of Fire L-1
437-004-1440 Required Postings L-2
437-004-1450 Extinguishers L-3
437-004-1460 Fire Prevention Plan L-4
437-004-1470 Employee Equipment and Training L-4

Subdivision M, Compressed Gasses

437-004-1505 Air Receivers and Pressure Systems M-1
437-004-1525 Boilers and Steam Systems..... M-3

Subdivision N, Material Handling

437-004-1610 General Requirements N-1
437-004-1630 Conveyors..... N-3
437-004-1670 Automotive Hoists..... N-4
437-004-1680 Storage of Hazardous Chemicals..... N-4
437-004-1700 Forklifts and Other Powered Industrial Trucks..... N-6
437-004-1750 Helicopters.....N-12
437-004-1805 Rope, Chain, Rigging, and Hoists N-14
437-004-1825 Tackle and Hoisting Equipment.....N-15

Subdivision O, Equipment Guarding

437-004-1910 General Equipment Guarding O-1
437-004-1940 Farm Field Equipment O-3
437-004-1970 Farmstead Equipment O-5
437-004-2000 Powered Saws O-8
437-004-2100 Grinders O-11

Subdivision P, Small Tools

437-004-2220 General Requirements - Small Tools P-1
437-004-2230 Guarding of Portable Powered Tools P-2
437-004-2240 Power Lawnmowers P-14
437-004-2260 Other Portable Tools and Equipment P-16

Subdivision Q, Welding

437-004-2310 General Requirements Q-1
437-004-2350 Oxygen-Fuel Gas Welding and Cutting Q-6
437-004-2400 Arc Welding and Cutting Q-12

Subdivision S, Electricity

437-004-2810 General Requirements S-1
437-004-2850 Temporary Lighting and Wiring S-2
437-004-2860 Flexible Cable and Extension Cords S-3
437-004-2870 Attachment Plugs and Receptacles S-4
437-004-2880 Cord and Plug-Connected Equipment S-5
437-004-2900 Grounding and Bonding S-6
437-004-2950 Switches and Circuit Breakers S-7
437-004-3000 Identification and Load Ratings S-8
437-004-3050 Work Near Overhead Lines S-8
437-004-3075 Agricultural Buildings with Special Hazards S-9

Subdivision T, Miscellaneous

437-004-3100 Excavation T-1

Subdivision U, Vehicles

437-004-3410 Agricultural, Commercial and Industrial Vehicles U-1
Appendix A to 437-004-3410, Specific Equipment U-9
437-004-3420 Working from Vehicles and Vehicle Loads.....U-11
437-004-3430 Training for Agriculture Tractor Operators U-11
437-004-3460 Industrial Vehicles U-12
437-004-3480 Bridges, Roads and Ramps.....U-12
437-004-3550 Servicing Multipiece and Single Piece Rim Wheels U-13
437-004-3600 Roll-Over Protective Structures (ROPS) for Tractors in Agriculture U-13
437-004-3650 Roll-Over Protective Structures - Industrial Vehicles.....U-17
437-004-3660 Vehicle-Mounted Elevating and Rotating Work Platforms....U-18

Subdivision W, Worker Protection Standard

437-004-6000 Adoption by Reference of Federal Standard W-1
437-004-6001 Expiration and Implementation Dates W-2

Subpart D General Provisions

170.301 Scope and Purpose.....W-5
170.303 Applicability of this part W-5
170.305 Definitions W-6
170.309 Agricultural employer duties.....W-11
170.311 Display requirements for pesticide safety information and pesticide application and hazard information W-14
170.313 Commercial pesticide handler employer duties.....W-19
170.315 Prohibited actions W-22

Subpart E **Requirements for Protection of Agricultural Workers**

170.401 Training requirements for workers W-25
437-004-6401 Effective dates for worker training programs in Oregon..... W-26
170.403 Establishment-specific information for workers W-29
170.405 Entry restrictions associated with pesticide applications W-30
437-004-6405 Restrictions associated with outdoor production pesticide applications..... W-30
437-004-6406 Pesticide spray drift and innovative methods W-34
170.407 Worker entry restrictions after pesticide applications W-37
170.409 Oral and posted notification of worker entry restrictions ... W-37
170.411 Decontamination supplies for workers W-44

Subpart F **Requirements for Protection of Agricultural Pesticide Handlers**

170.501 Training requirements for handlers..... W-47
437-004-6501 Handler training programs in Oregon..... W-48
437-004-6502 Oregon requirements for Worker Protection Standard trainers of handlers who qualify using train-the-trainer programs..... W-49
170.503 Knowledge of labeling, application-specific, and establishment-specific information for handlers W-50
170.505 Requirements during applications to protect handlers, workers, and other persons..... W-51
170.507 Personal protective equipment..... W-52
437-004-6508 Respiratory Protection W-55
170.509 Decontamination and eye flushing supplies for handlers ... W-58
437-004-6509 Emergency eye-washes and eye flushing supplies W-59

Subpart G **Exemptions, Exceptions and Equivalency**

170.601 Exemptions W-61
170.603 Exceptions for entry by wokers during restricted-entry intervals W-62

170.605 Agricultural employer responsibilities to protect workers entering treated areas during a restricted-entry interval ... W-65
170.607 Exceptions to personal protective equipment requirements specified on pesticide product labeling W-67

Subdivision Z, Chemical/Toxins

437-004-9000 Air Contaminants Z-1
437-004-9010 Fumigated Areas.....Z-29
437-004-9050 Asbestos.....Z-31
437-004-9090 13 Carcinogens.....Z-32
437-004-9600 Lead.....Z-32
437-004-9620 Cadmium Z-35
437-004-9626 Chromium (VI) Z-35
437-004-9640 Benzene Z-36
437-004-9650 Bloodborne Pathogens Z-37
437-004-9710 Acrylonitrile.....Z-38
437-004-9720 Thiram Z-38
437-004-9740 Ethylene Oxide Z-43
437-004-9760 Formaldehyde Z-44
437-004-9780 Methylenedianiline Z-44
437-004-9800 Hazard Communication Standard for Agricultural Employers.....Z-44
437-004-9830 Retention of Department of Transportation (DOT) Markings, Placards and Labels.....Z-59
437-004-9850 Pipe Labeling.....Z-59
437-004-9860 Hazardous Chemicals in Laboratories.....Z-65

Historical Notes for Division 4

Note 1: The OR-OSHA Advisory Committee of Small Agricultural Employers provided the philosophical and structural guidance for this standard, Division 4, Agriculture. Most farmers, ranchers and growers were committed to have only one book of OR-OSHA standards. We began this process committed to not enacting any new standards. However, the agricultural community soon realized the need for some new standards. We emphasize that most of the new standards do not represent new requirements for employers. In most cases the new standard merely consolidates and clarifies what was done previously from a variety of sources. Some examples are forklift driver training, storage of chemicals and pay for personal protective equipment. This standard is written in plain English and is formatted for easy reading.

OR-OSHA **Admin. Order 4-1998, filed 8/28/98, effective 10/1/98**.

Note 2: Oregon OSHA adopted changes to the standard for Agricultural employers, Division 4. These changes are the result of proposed legislation introduced by the Oregon Farm Bureau Federation.

Oregon OSHA negotiated changes to these administrative standards with the Farm Bureau to provide the needed updating of the standards without completing the legislative process.

The changes effect only the standard on Safety Committees, Chapter C.

The effect of these changes is to modify the requirements for safety committees for Oregon agricultural employers with more than 10 non-seasonal workers. The changes eliminate several paperwork requirements. They also move the standard to a more performance-oriented approach.

For smaller agricultural employers, the changes eliminate required safety committees. These are employers who have fewer than 11 non-seasonal workers but who may hire enough seasonal workers to swell their force temporarily during a particular cycle.

The term seasonal worker is defined for the first time. For the sake of consistency, the definition mirrors others used by various government agencies in the regulation of agriculture.

Employers with small non-seasonal work forces must hold special orientation meetings for their seasonal workers to assure that these people are not excluded from the training and information they need to work safely.

Comments received at the public hearing on April 23, 1999, and throughout the time the amendments were proposed, were in agreement with the changes.

OR-OSHA **Admin. Order 2-1999, filed 4/30/99, effective 4/30/99**.

Note 3: During the last growing season issues were raised that led to the establishment of a work group to develop solutions. Of particular concern was a requirement for a second means of exit even in single room dwellings that were in compliance with Building Codes and Fire Marshal rules.

A committee of representatives of labor, the agricultural community, elected officials, and state agencies whose standards affect labor housing, worked on developing the changes to 437-004-1120, Agricultural Labor Housing and Related Facilities, in Division 4/J, Agriculture/Work Environment. We are making similar changes to 437-002-0142, Labor Camps, in general industry.

We regrouped some subjects into more logical categories. Wording or grammar in several rules changed to make the rule easier to follow and/or enforce.

Several definitions changed to reflect current practices or to more closely match the same definitions in other state regulatory documents such as those of the Building Codes Division.

A date (December 15, 1989) is now part of a few rules to make OR-OSHA requirements more synchronous with those of the Building Codes Division (BCD). For certain issues, any housing built or remodeled on or after that date must comply with BCD standards on those issues. Housing built or remodeled before that date must meet standards in effect at the time of the work. For most other issues compliance is based on the particular standard in effect at the time the work was done.

Housing units built or remodeled on or after December 15, 1989 must comply with new OR-OSHA rules and the state building code rules on emergency exits. Those rules give location and design criteria. One-room living areas no longer need a second emergency exit. Older multi-room units must comply with the old OR-OSHA rules.

We added a paragraph to prohibit citations resulting from housekeeping practices of camp occupants.

Recyclable materials like cans and bottles are no longer trash for the purposes of certain rules governing trash and refuse.

Operators must post their street numbers so that responding emergency vehicles can see them from the street.

Requirements for toilets, handwashing and bathing facilities changed to read one unit for each fifteen employees or fraction thereof.

Requirements for handling and control of garbage are now restricted to outside of buildings and certain recyclable materials are not considered garbage for that rule.

Based on comments we received, three categories of registration exemptions are eliminated from the new rules. Based on ORS 654.705(7) Oregon OSHA believes these categories are already exempt from registration and need not be repeated in the rules. They are:

Dwellings occupied by the owner or owning family; or

Dwellings occupied year-round by employees who are members of a nuclear family (parents, children, grandparents or siblings); and

The original structure and any remodeling conformed to building codes or manufactured dwelling regulations in effect at the time they were done.

Oregon OSHA received many comments on the issue of required heating during specified months of the year. After consideration of all the comments and analysis of the economic impact versus the potential impact of safety and health, this rule remains unchanged.

The following changes are proposed to have an effective date of October 1, 2000:

Housing operators must now provide a mattress or pad for any bed or bunk. The bed or bunk must keep the mattress at least 6 inches off the floor.

Each unit must have a working smoke detector at the time of initial occupancy. The operator is not responsible for actions of occupants to defeat or disable the detector.

Tent must be made of or treated with flame retardant materials.

OR-OSHA **Admin. Order 5-2000, filed 5/18/00, effective 6/1/00 (some portions effective 10/1/00)**.

Note 4: Oregon's Legislative Counsel notified OR-OSHA that OAR 437-004-0250(6) did not conform to the requirements of ORS 654.182(d). The adopted changes bring the administrative rule into agreement with the statute. OAR 437-004-0250 is the rule for Safety Committees in Division 4/C, Agriculture/Safety Awareness.

OR-OSHA **Admin. Order 7-2000, filed 7/26/00, effective 7/26/00**.

Note 5: Oregon OSHA replaced rules, almost 30 years old, in Division 2, General Industry, about working on or over water. Existing rules reflect the original intent to apply mostly to log ponds and similar applications, and do not reflect either current practices or technology. The new rules are the result of a series of meetings with effected parties including the United States Coast Guard.

Oregon OSHA also placed rules about working on or over water in Division 4, Agriculture. Oregon's old standard, Division 81, Agricultural Operations, had these rules but they were erroneously left out during the writing of the new standard, Division 4, Agriculture. This adoption is to put them back and update the language for the same reasons as stated above.

In response to public comments, we made one change from the original proposal for both agriculture and general industry. We added language exempting workers covered by Oregon standards for commercial divers. The reasoning was that the proposal could have been construed to require divers to wear personal flotation devices (PFDs).

OR-OSHA **Admin. Order 1-2001, filed 1/18/01, effective 3/1/01**.

Note 6: Oregon OSHA standards must be as effective as federal OSHA. There were slight differences in the air contaminants rules. Therefore, OR-OSHA has modified three substances: Carbon disulfide; Ethylene dibromide; and Mercury and Mercury organo (alkyl), to match federal OSHA's standard in construction and maritime. For uniformity, Oregon initiated air contaminant rules in general industry, construction and agriculture will all reflect the amendments.

Oregon added the skin designation to the three substances listed above. Also, Oregon changed the PEL to 25 ppm ceiling value for Ethylene dibromide (currently at 30 ppm).

OR-OSHA **Admin. Order 4-2001, filed 2/5/01, effective 2/5/01**.

Note 7: Oregon OSHA adopted changes to Division 4/H, OAR 437-004-0790, Use of Liquefied Petroleum Gas or Natural Gas in Fields and Orchards, to bring them into harmony with requirements of the Oregon Office of State Fire Marshal and the Oregon Building Codes Division. The changes also clarify the application by excluding portable equipment. The requirement to guard certain tank installations is deleted after consultation with orchardists and LPG industry representatives. This requirement was originally set for industrial applications where the hazard of vehicle contact with the tanks is substantial and frequent. Isolated orchard locations do not present this hazard.

OR-OSHA **Admin. Order 7-2001, filed 5/15/01, effective 5/15/01**.

Note 8: Oregon OSHA amended the air contaminants standard in Division 4/Z, Agriculture/ Chemical/Toxins. The change is to Table Z-2, to the entry for Methylene Chloride. When federal OSHA amended the Methylene Chloride standard in general industry, construction, and shipyard employment, OR-OSHA inadvertently did not amend the table in our agriculture standard to reflect the lower exposure limit of 25ppm. The exposure limit of 25ppm for methylene chloride is now the same in general industry, construction, agriculture, and shipyard employment.

OR-OSHA **Admin. Order 9-2001, filed 9/14/01, effective 9/14/01**.

Note 9: Based on the most recent injury and illness data provided by the Department's Research and Analysis Section, the trigger for the top 10 percent of lost work day cases incidence rates for agriculture has changed from two to one. This change in the administrative rules is precipitated by ORS 654.176(b)(A). The rule affected is OAR 437-004-0250(1)(b) and note, Safety Committees, in Division 4/C, Agriculture/Safety Committees.

OR-OSHA **Admin. Order 1-2002, filed 2/15/02, effective 2/15/02**.

Note 10: The Environmental Protection Agency (EPA), published in the September 1, 2004 Federal Register, amendments to 40 CFR 170, Worker Protection Standard. EPA amended the 1992 Pesticide Worker Protection Standard to permit optional use of separable glove liners beneath chemical-resistant gloves. This amendment also makes optional the provision that agricultural pilots wear gloves when entering or leaving aircraft. All other provisions of the Worker Protection Standard are unaffected by this rule. EPA believes that these changes will reduce the cost of compliance and will increase regulatory flexibility without increasing potential risks.

Oregon OSHA adopted these changes as published. These changes are in OR-OSHA's Division 4/W, Agriculture/Worker Protection Standard.

OR-OSHA **Admin. Order 7-2004, filed 12/30/04, effective 12/30/04**.

Note 11: A new Respiratory Protection standard was adopted in Division 4/I, Agriculture. OAR 437-004-1041, Respiratory Protection was adopted as OR-OSHA Administrative Order 3-2006 on June 7, 2006, but will not be effective until March 1, 2007.

The current 437-004-1040, Respiratory Protection will remain in effect through February 28, 2007.

Oregon OSHA will have both standards on the web site and in hard copy until March 2007.

The Respiratory Protection Standard was reworded for clarity and plain language, and to bring the rules up to Division 2/I standards having one rule for all respirator users.

Summary of changes:

- There are new requirements for voluntary use of respirators. You must provide respirator users with the information contained in Appendix D, and have a medical evaluation required for respirators with the exception of filtering face-pieces, and have cleaning, storing and maintenance procedures in the program.
- There is a requirement for annual fit-testing of required use of respirators.
- There is a change from annual medical evaluations to a medical evaluation before the first fit-test.
- New appendices A, B1, B2 and D were added for procedures on fit-testing (A), user seal check (B1) and proper cleaning (B2) the medical questionnaire was moved to (C) and voluntary use information (D). The mandatory appendices C and D are also in Spanish.
- There is a section on interior structural firefighting requiring the two in two out rules.
- Training is required annually.
- A change out schedule for canisters and cartridges is required.

OR-OSHA **Admin. Order 3-2006, filed 6/7/06, effective 3/1/07**.

Note 12: This rule adds new requirements for exposures to hexavalent chromium, including a lower airborne permissible exposure limit, an action level, airborne exposure assessments, regulated areas, change and washing facilities, medical surveillance, and training.

These changes are required to keep OR-OSHA standards as effective as Federal OSHA.

Oregon OSHA did not adopt the exception for pesticide use. Federal OSHA does not regulate the use of pesticides because the Environmental Protection Agency (EPA) regulates these exposures through the Worker Protection Standard (WPS). However, since Oregon OSHA enforces the WPS this exemption does not apply in Oregon.

Oregon OSHA adopted these changes into general industry, construction, agriculture, and maritime.

The proposed amendments to the permissible limit for airborne concentrations of respirable silica were not adopted in this rulemaking.

OR-OSHA **Administrative Order 6-2006, adopted and effective August 30, 2006**.

Note 13: Oregon OSHA adopted changes in 16 subdivisions of Division 4, Agriculture, including: clarify language, correct/add reference changes, add notes, the lead standard is removed from Division 4 and OAR 437-002-1910.1025 (Division 2/Z) is referenced, added requirements to Roll-Over Protective Structures (ROPS) due to Federal OSHA changes, changes to General Requirements in Electricity, a new paragraph on varmint killers, and a new rule on fumigated areas.

OR-OSHA **Administrative Order 9-2006, adopted and effective September 22, 2006**.

Note 14: Oregon OSHA adopts the Federal OSHA changes as they appear in the August 24, 2006 Federal Register. These changes revise the existing rules on respiratory protection, adding definitions and new language that establishes Assigned Protection Factors (APFs) and Maximum Use Concentrations (MUCs) for respirator use. The revisions also supersede the respirator selection provisions of existing substance-specific standards with these new APFs (except for the respirator selection provisions of the 1,3-Butadiene Standard).

Federal OSHA developed the final APFs after thoroughly reviewing the available literature, including chamber-simulation studies and workplace protection factor studies, comments submitted to the record, and hearing testimony. The final APFs provide employers with critical information to use when selecting respirators for employees exposed to atmospheric contaminants found in general industry, construction, shipyards, longshoring, and marine terminal workplaces. Oregon OSHA also adopts these changes into Division 4, Agriculture. Proper respirator selection using APFs is an important component of an effective respiratory protection program. Accordingly, Federal OSHA concludes that the final APFs are necessary to protect employees who must use respirators to protect them from airborne contaminants.

OR-OSHA **Administrative Order 10-2006, adopted and effective November 30, 2006. Changes to OAR 437-004-1041 (Agriculture) are effective March 1, 2007**.

Note 15: Oregon OSHA is correcting typographical errors and incorrect references, which will add clarity to the Respiratory Protection Standard in Division 4, Agriculture.

OR-OSHA **Administrative Order 3-2007, adopted and effective August 13, 2007**.

Note 16: After meeting with stakeholders, negotiations with Federal OSHA, and giving consideration to comments received at hearings, Oregon OSHA adopts these changes to OAR 437-004-1120, Agricultural Labor Housing (ALH) and Related Facilities, in Division 4/J, Agriculture/Work Environment, to make our rules "as effective" as those of Federal OSHA.

The major changes are:

Beginning on January 1, 2018, the rule will require all agricultural labor housing, where workers cook, live and sleep in the same area, to provide 100 square feet per occupant. Square footage requirements for sleep-only areas will not change.

For units built after April 3, 1980, at least one-half the required floor space in each living area must have a minimum ceiling height of 7 feet. Floor space with a ceiling height less than 5 feet does not count toward the minimum required floor space.

Beginning on January 1, 2018, only areas with a 7 foot ceiling height will count toward the required square footage of any living or sleeping area.

Ratios of sinks and showers will change starting on April 1, 2009. The rules on laundries and window requirements will also change on April 1, 2009.

Delayed effective dates are to give operators time to secure needed permits from local authorities and to arrange financing for projects that require major work.

Oregon OSHA removed references to tents. Tents are acceptable labor housing when they meet all the criteria in the rule, just like any other style housing.

The rule now requires heat be available in all ALH without regard to the time of year.

The rule now requires 'livestock operations' be at least 500 feet from all ALH unless the employees in the housing are employed to tend or otherwise work with the animals. This does not apply to animals owned by the housing occupants.

OAR 437-002-0142 Temporary Labor Camps in Division 2/J, General Industry/Environmental Controls, is also amended. The entire text of the rule is removed and new language is added stating that OAR 437-004-1120 applies in General Industry, Construction, and Forest Activities as well as Agriculture, except paragraphs (5), (6)(p), and (24).

This is OR-OSHA **Administrative Order 4-2008, adopted March 24, 2008 and effective May 1, 2008**.

Note 17: Oregon OSHA adopted the Federal OSHA changes as they appear in the November 15, 2007 Federal Register, into Division 2/I, Personal Protective Equipment, Division 3/E, Personal Protective and Life Saving Equipment, and Division 5, Maritime Activities. The changes codify and clarify the employers' responsibility to provide and pay for protective equipment that is necessary for employees to perform their jobs safely.

In addition to the Federal OSHA changes, Oregon OSHA proposes to replace the existing language in Division 4/I, Protective Equipment, with language comparable to the new Federal OSHA language for clarity.

This is OR-OSHA **Administrative Order 5-2008, adopted May 1, 2008 and effective May 15, 2008**.

Note 18: This rulemaking is to keep Oregon OSHA in harmony with recent changes to Federal OSHA's standards. We are removing several references to consensus standards that have requirements that duplicate, or are comparable to, other OR-OSHA rules; this action includes correcting a paragraph citation in one of these rules. We are also removing a reference to American Welding Society standard A3.0-1969 ("Terms and Definitions") in our general industry welding standards. This rulemaking is part of a continuing effort to update references to consensus and industry standards used throughout our rules.

OR-OSHA adopts the changes in general industry as published in the December 14, 2007 Federal Register with the following exceptions:

- Division 2/H, 1910.94(c)(1)(ii), and (3) - In Oregon 437-002-0107 Spray Finishing applies.
- Division 2/H, 1910.107 - In Oregon 437-002-0107 Spray Finishing applies.
- Division 2/R, 1910.261 - In Oregon 437-002-0312 Oregon Rules for Pulp, Paper, and Paperboard Mills applies.

A reference to American National Standard Safety Requirements for Explosive-Actuated Fastening Tools, ANSI A10.3-1995 is removed in Division 4/P, Agriculture/Small Tools.

This is OR-OSHA **Administrative Order 7-2008, adopted and effective May 30, 2008**.

Note 19: These changes are necessary to resolve issues expressed by Federal OSHA toward making our rules at least as effective as theirs. In addition, the removal of the heater language is to recognize new safety technology.

437-004-1120(16) Living Areas.

We will delete paragraph (c)(B) to reflect changes in heater technology. Paragraph (C) will become (B) and (D) will become (C). Paragraph (B) is adequate to address any hazards related to ribbon-type heaters as they now come with safety devices to shut them off if they overheat.

437-004-1120(16) Living Areas.

Wording added to paragraph (n) will close a gap in coverage pointed out by Federal OSHA. The result is that existing housing will be good until the 2018 change date unless it is remodeled. New construction and existing housing remodeled between this adoption and 2018 will have to meet the new requirements in paragraph (n).

437-004-1120(18) Common use cooking and eating facilities and equipment.

Federal OSHA requires adding this language to be as effective as their rule. It requires enclosed, screened shelters for common use cooking and eating facilities.

437-004-1120(19) Dining Halls and equipment.

Federal OSHA requires adding this language to be as effective as their rule. It requires enclosed, screened shelters for dining halls.

This is Oregon OSHA **Administrative Order 1-2009, adopted and effective January 26, 2009**.

Note 20: In Oregon, Oregon OSHA administers and enforces the pesticide Worker Protection Standard (WPS: 40 CFR 170) as adopted in Division 4, Agriculture, Subdivision W, OAR 437-004-6000.

This rulemaking amends OAR 437-004-6000 to reflect non-substantive corrections and technical amendments that were published in the Federal Register from 2006 through 2009.

Oregon OSHA is also amending the pesticide Worker Protection Standard (WPS) in Division 7, Forest Activities, Subdivision A, General Requirements, OAR 437-007-0010, to clarify the references in Division 7 to the WPS in Division 4.

In addition, Oregon OSHA is amending Division 2, General Industry, Subdivision Z, Toxic and Hazardous Substances, by adopting a new rule (OAR 437-002-0170) to clarify that under certain circumstances all parts of the Worker Protection Standard (WPS) apply to general industry workplaces, and are a part of Division 2 in addition to, and not instead of, any other part of Division 2.

Members of the public submitting written comments expressed support for the changes but noted that the proposed amendments (being non-substantive) do not go far enough to improve the protection of Oregon's affected workers from exposure to pesticides. The changes suggested by these commenters were outside the parameters of this rulemaking.

This is Oregon OSHA **Administrative Order 9-2009, adopted and effective September 21, 2009**.

Note 21: This rulemaking is to keep Oregon OSHA in harmony with recent changes to Federal OSHA's standards.

Federal OSHA revised the personal protective equipment (PPE) sections of its general industry, shipyard employment, longshoring, and marine terminals standards concerning requirements for eye- and face-protective devices, and head and foot protection.

Federal OSHA updated the references in its regulations to reflect more recent editions of the applicable national consensus standards that incorporate advances in technology. Federal OSHA requires that PPE be safely designed and constructed for the tasks performed.

Amendments to the PPE standards include a requirement that filter lenses and plates in eye-protective equipment meet a test for transmission of radiant energy such as light or infrared.

Oregon OSHA adopted the changes in general industry and maritime activities as published in the September 9, 2009 Federal Register. The updated references are also made in Oregon OSHA's Division 4, Agriculture, and Division 7, Forest Activities.

This is Oregon OSHA **Administrative Order 2-2010, adopted and effective February 25, 2010**.

Note 22: These changes result from legislation, input from the regulated community and input from Oregon OSHA staff.

Changes to Subdivision 4/A, Agriculture/ General Subjects, at OAR 437-004-0002, Scope, cross-reference and clarify the SIC and NAICS codes to which the Division 4 rules apply. A duplicate rule for adoption of the Worker Protection Standard (OAR 437-004-0004) was eliminated. In OAR 437-004-0099, General Standards, a requirement at (1)(b) was rewritten in plain language. At (3), rules for inspecting workplaces, and at (4)(a), rules for investigating time-loss injuries and illnesses were cross-referenced with the numbering changes in 4/C Safety Committees and Safety Meetings.

Changes in Subdivision 4/C, Safety Awareness, fulfill Oregon OSHA's responsibility under a recent legislative mandate to require all Oregon employers, regardless of size, to have either a safety committee or to hold safety meetings.

The safety committee rule, OAR 437-004-0250 is repealed on the effective date, January 1, 2011, and is being replaced with OAR 437-004-0251, Safety Committees and Safety Meetings, incorporating the changes required by the legislative mandate. The scope of the rule is defined as all agricultural employers with workers, excluding seasonal workers. All employers with workers can have a safety committee. The number of (nonseasonal) workers, both full-time and part-time, per location determine whether the employer also has the option of holding monthly safety meetings instead of having a safety committee.

The special needs of agricultural employers are addressed by maintaining separate safety orientation requirements for employers of seasonal workers, as outlined in OAR 437-004-0240, Safety Orientation for Seasonal Workers. The original definition was maintained in the final rule: Seasonal workers are "employed in a job tied to a certain time of year by an event or pattern and for not more than 10 months in a calendar year." Additional notes were added to this section to cross reference and explain the minimum training and orientation requirements for seasonal workers who perform only "hand labor operations" as defined in the rule.

The Division 4/C rules for employers of both seasonal and non-seasonal workers now specifically state – at OAR 437-004-0240(2)(b) and 437-004-0251(2)(b) – that safety awareness information must be communicated "in a manner that workers can understand." Employers with employees who have language barriers must "include content that is either translated into the language used to hire and supervise these employees or that is otherwise effectively conveyed, such as through visual media."

Changes in Subdivision 4/K, Agriculture/ Medical and First Aid, at OAR 437-004-1305, are mostly stylistic, putting the existing requirements for first aid, emergency medical treatment, the emergency medical plan, and emergency eyewash and safety showers into clearer language.

Paragraph (5), Emergency eyewash and shower facilities, are rewritten for the final rule to address concerns by commenters. The final rule clarifies when eyewash, shower equipment, or both are required and defines the minimum standards for both plumbed (potable) and self-contained systems. In the final rule, employers must provide employees with an emergency eyewash, shower equipment, or both to decontaminate themselves, based on the hazard. Eyewash and shower equipment requirements apply both to all chemical substances that may be present in the workplace and, for pesticide products, based on what the pesticide label requires.

Decontamination equipment is no longer linked to its location at a fixed or mobile site but is related to the hazard.

Based on comments received, Oregon OSHA is delaying the effective date to January 1, 2011, for all changes in this rulemaking.

This is Oregon OSHA **Administrative Order 4-2010, adopted July 8, 2010 and effective January 1, 2011**.

Note 23: This rulemaking is to keep Oregon OSHA in harmony with recent changes to Federal OSHA's standards.

Oregon OSHA adopted changes to rules in general industry, construction, agriculture, and maritime. Federal OSHA published a number of rule changes in these industries in the June 8, 2011 Federal Register. This is Phase III of the Standards Improvement Project (SIP III), the third in a series of rulemaking by Federal OSHA to improve and streamline the standards. This removes or revises individual requirements within rules that are confusing, outdated, duplicative, or inconsistent.

Oregon OSHA adopted the majority of the federal changes that include:

- Personal Protective Equipment – Division 2/I, remove requirements that employers prepare and maintain written training certification records.
- Respiratory Protection – revise requirements for breathing-gas containers.
- Material Handling/Slings – revise standards in general industry, construction, and maritime standards.
- Commercial Division Operations – Division 2/T, remove two obsolete recordkeeping requirements.
- General industry and construction – remove requirements in numerous standards for employers to transfer specific records to the National Institute for Occupational Safety and Health (NIOSH).
- Lead – amend trigger levels in general industry and construction.

In connection with rule changes in the SIP III rulemaking process, Oregon OSHA adopted additional changes to the subdivisions and rules opened during this rulemaking activity. We also made reference changes to Underground Installations in Division 3/P.

Oregon OSHA repealed all of Division 2/I rules with the exception of 1910.134 Respiratory Protection, 1910.137 Electrical Protective Equipment, 437-002-0138 Additional Oregon Rule for Electrical Protective Equipment, 437-002-0139 Working Underway on Water, and 437-002-1139 Working Over or In Water.

To replace them, we adopted new Oregon-initiated rule, 437-002-0134 Personal Protective Equipment, that includes sections covering scope/application, hazard assessment, equipment, training, payment, fall protection, clothing, high visibility garments, eye, head, foot, leg, hand and skin protection.

The change in format simplifies the existing text while making little change to the overall rule requirements with the following exceptions:

- Modifies the hazard assessment requirement to clarify that employers must identify hazards to the entire body, including the torso and extremities, when performing the assessment. The assessment is currently limited to head, hands, eyes and face and foot protection. Note: The assessment for eyes, face, head, hands, and feet are currently in effect. The torso and extremities (e.g. arms and legs) element of the body assessment will not be enforced until July 1, 2012.
- Change the fall protection component criteria to align with the systems criteria found in 1926.502 of the construction standards. The training requirement in this rule would also cover those parts not previously covered, such as fall protection.

Definition of "potable water":

Previously, Oregon OSHA did not adopt 1910.141(a)(1), so the SIP-III changes to the definition of potable water must be addressed through Oregon-initiated rules. We will maintain the current definition of potable water in Division 2/J, 437-002-0141(1)(a), Sanitation and Division 4/J, 437-004-1105(1)(b), Sanitation. However, for consistency, we changed the definition of potable water in Division 4/J, 437-004-1110, Field Sanitation for Hand Labor Work, and Division 3/D, 437-003-0015 Drinking Water to the same definition.

MOCA -- 4,4'-Methylene bis (2-chloroaniline):

As a logical extension of the Federal OSHA SIP-III changes to 29 CFR 1910.1003, 13 Carcinogens, we amended the Oregon Rules for MOCA (4,4'-Methylene bis (2-chloroaniline)) at Division 2/Z, 437-002-0364. The requirements for respiratory protection are updated and the requirements for transfer of records is simplified. Most transfer of medical records to NIOSH is eliminated with the SIP III rulemaking. The employer is required to follow the requirements of the Respiratory Protection rule and select appropriate respirators based on the selection criteria in 1910.134(d). (The type of respirator to use is no longer specified.) We will also remove and reserve 437-002-0364(6)(a) which had a reporting requirement end date of December 1974.

This is Oregon OSHA **Administrative Order 4-2011, adopted and effective December 8, 2011**.

Note 24: Oregon OSHA proposed changes to Agriculture, Division 4/A General Subjects; 4/B Definitions; 4/I Protective Equipment; and 4/Z Chemical/Toxins. We removed subdivisions A and B from this current rulemaking action. Three public hearings were held in June 2012 with no comments received for proposed changes to subdivisions I and Z. Oregon OSHA adopts one new rule in Division 4/Z, one new appendix in Division 4/I, and amends 23 existing rules in Division 4/I and 4/Z.

Subdivision I modifies the requirements for employers providing Personal Protective Equipment to include an evaluation of the hazards. A new non-mandatory appendix to Subdivision I provides a template for employers to use in this evaluation. Also, training requirements are specified for employees using general PPE. The format of the rules for PPE for parts of the body (head, eyes and face, hands and feet) is simplified and the requirements are aligned with the requirements in the Division 2 rules.

The format is standardized in the rules for Subdivision Z (Chemicals and Toxins.) The Division 4 Air Contaminant rules are updated to match the Division 2 Air Contaminant rules. The substance-specific rules make clear that either the Division 2 or Division 3 rules apply, depending on the type of activity, if there is an exposure to these toxins.

This is Oregon OSHA **Administrative Order 4-2012, adopted September 19, 2012, and effective January 1, 2013**.

Note 25: Oregon OSHA has adopted changes related to the globally harmonized system of chemical classification and labeling (GHS) into OAR 437-004-9800, the Hazard Communication Standard (HCS) for Agricultural Employers. In addition, twelve related Division 4 rules were modified to incorporate the GHS definitions and terminology.

The related rules include the Division 4 universal definitions; and standards for flammable liquids, fire prevention, pipe labeling, and the storage of hazardous chemicals.

This rulemaking will improve safety for agricultural workplaces by focusing on the hazard communication requirements pertaining to users of hazardous chemicals (as opposed to those for manufacturers, importers, and distributors.) These revisions will simplify compliance by establishing a uniform flow of information about chemical hazards in Oregon OSHA's Division 4 rules.

This is Oregon OSHA **Administrative Order 3-2014, adopted and effective August 8, 2014**.

Note 26: Oregon Occupational Safety and Health Division (Oregon OSHA) administers and enforces the employee safety and health part of the U.S. Environmental Protection Agency (EPA)'s pesticide Worker Protection Standard (WPS) as adopted in Division 4/ Agriculture as adopted at OAR 437-004-6000. The standard aims to protect workers – those who work in pesticide-treated crop areas – and handlers – those who mix, load, and apply pesticides. EPA modified the WPS at the federal level (40 CFR 170) in the November 2, 2015 Federal Register. In response, Oregon OSHA initiated the rule-making process working with an advisory committee – including representatives of labor, employers, grower organizations, and government and nonprofit agencies, and other stakeholders – and reviewed extensive public comments received both orally at three public hearings held around the state, and in written format following formal proposal in late 2016.

Oregon OSHA is adopting most of the modified rules initiated by the EPA as well as several Oregon-initiated rules introduced to reflect the unique circumstances for employers in Oregon. The agency will continue to enforce the existing WPS through the end of 2017.

The rule changes are expected to lead to an overall reduction in incidents of unsafe pesticide exposure and to improve the occupational health of agricultural workers and pesticide handlers.

The adopted OARs:

- 437-004-6001 gives expiration and implementation dates for the existing and revised rules. The rules codified in Division 4/W as 170.1 through 170.260 will remain in effect through 2017, and expire on 12/31/2017. The new rules, codified as 170.301 through 170.607, and the other five new OARs will be implemented beginning on January 1, 2018.
- 437-004-6401 and 437-004-6501 provide specific effective dates for the revised subject matter to be included in training programs for both workers and handlers. In addition, the requirements for crop advisor training programs necessary to exempt workers and handlers from WPS training is cross-referenced to the minimum subject matter in these OARs.
- 437-004-6508 Respiratory Protection and 437-004-6509 Emergency eye-washes and eye flushing supplies maintain Oregon OSHA's more protective requirements related to respiratory protection and emergency eye-washes while fulfilling the EPA's pesticide label requirements.
- 437-004-6502 augments training requirements in Oregon for trainers of WPS handlers who use the Train-the-Trainer qualification described in 170.501(c)(4)(ii) of the WPS. The adopted rule does not apply to trainers of WPS handlers who meet the qualification as certified applicators described in 170.501(c)(4)(iii).

The agency will reconsider some details of the 2016 WPS proposal through a separate public rulemaking process centered on the Application Exclusion Zone (AEZ.) To give more time to fine-tune those provisions and to ease the transition to the modified rule requirements, Oregon OSHA is delaying implementation of the modified standard until Jan. 1, 2018. The expected result will be a revised proposal initiated in 2017, in time for it to take effect with the other modified sections of the WPS on Jan. 1, 2018.

This is Oregon OSHA **Administrative Order 1-2017, adopted February 14, 2017 and effective January 1, 2018**.

Note 27: Oregon OSHA administers and enforces the Environmental Protection Agency's (EPA) pesticide Worker Protection Standard (WPS) as adopted in Division 4/W (Agriculture/Worker Protection Standard), OAR 437-004-6000. Oregon OSHA has adopted two new Oregon Administrative Rules (OARs) that reflect specific requirements for employers in Oregon.

These rules complement and complete the changes adopted by Oregon OSHA on February 14th, 2017 on the amended Worker Protection Standard adopted by the EPA in the November 2, 2015 Federal Register. The rules, which exceed federal requirements, take effect January 1 ,2019.

The new OARs:

OAR 437-004-6405:

Restrictions associated with outdoor production pesticide applications(which replaces 170.405(a), is a new rule that describes the Application Exclusion Zone requirements (AEZ) including how employers ensure enclosed agricultural structures are closed properly, must provide instruction and information, and a decision matrix that navigates the rule requirements.

OAR 437-004-6406:

Pesticide spray drift and innovative methods is a new rule that describes that if issues relating to spray drift occur, then the employer is responsible for addressing those issues, and how drift reduction technologies can be used to gain approval for innovative methods through the variance process.

The WPS rules are also referenced, in Division 2, General Industry, at OAR 437-002-0170; and in Division 7, Forest Activities, at OAR 437-007-0010.

Pesticides, although a clear necessity in many workplaces, also represent varying levels of risks to workers and others (depending on both the particular pesticide used and the circumstances of the application). The Worker Protection Standard, taken as a whole, provides a number of important protective measures to reduce those risks. However, the risk of unintended exposures due to what is typically referred to as unintended "drift" can create exposure to workers outside the intended application area. In the case of worker housing, that exposure can also involve the workers' family members. The provisions of this proposed rule – as was true of the original EPA rule addressing AEZs – are intended to address that potential by providing an added measure of protection against unintended and unanticipated exposures outside of the locations where pesticides are intended to be applied. The AEZ surrounds and moves with spray equipment, beyond the safeguards enforced with respect to the treated area, must be free of all people other than appropriately trained and equipped pesticide handlers. The rule changes are expected to lead to an overall reduction in incidents of unsafe pesticide exposure and to improve the occupational health of agricultural workers and pesticide handlers.

Oregon OSHA held five hearings in multiple locations on these proposed rules. The division received 938 written comments during the extended comment period and over 100 oral comments at these hearings. These comments were vast and diverse, and all were considered by Oregon OSHA before the division adopted the rules as filed. Oregon OSHA published a summary of comments and agency decisions document on its website for viewing.

This is Oregon OSHA **Administrative Order 2-2018, adopted June 29, 2018 and effective January 1, 2019**.

437-004-0001 Application.

Everything in this standard is the responsibility of the employer. It is the responsibility of the employer to assure that their workers, facilities and equipment comply with this standard.

Stat. Auth.: ORS 654.025(2) and 656.726(4).
Stats. Implemented: ORS 654.001 through 654.295.
Hist: OR-OSHA Admin. Order 4-1998, f/8/28/98, ef. 10/1/98.

437-004-0002 Scope.

Standard Industrial Classifications – Division 004, Agriculture, applies only to employers with the following Standard Industrial Classifications (SIC) or North American Industrial Classification system (NAICS) codes.

NOTE: If you don't know your code, contact your Workers' Compensation Insurance carrier.

SIC	NAICS	
01	111	All Groups
02	112	All Groups
0711	115112	Soil Preparation Services
0721	115112	Crop Planting, Cultivating, and Protection
0722	115113	Crop Harvesting, Primarily by Machine
0723	115114	Crop Preparation Services for Market: Except Cotton Ginning Note: SIC 0723 (NAICS 115114), Division 4, Agriculture covers growers who: • Buy farm products for resale to the general public. These products may be cleaned, sorted, graded, dried whole, bagged or packaged, but are not processed. Examples of processing include cutting, canning, freezing, pasteurizing and homogenizing. • Grow 51 percent or more of the sold crops themselves, but also buy farm products for resale to anyone other than the general public. These products may be cleaned, sorted, graded, dried whole, bagged, or packaged, but are not processed. Examples of processing include cutting, canning, freezing, pasteurizing and homogenizing.
0761	115115	Farm Labor Contractors and Crew Leaders
0762	115116	Farm Management Services
0811	111421	Christmas Tree Growing and Harvest
0831	113210	Forest Nurseries and Gathering of Forest Products Note: Division 4, Agriculture, covers forest nursery employers growing: • Seedlings for reforestation. • Trees for purposes other than lumber, pulp, or other wood products.

Division 7, Forest Activities, covers employers:

- Growing trees for lumber, pulp, or other wood products.
- Gathering seeds, needles, bark, and other secondary forest products.

Stat. Auth.: ORS 654.025(2) and 656.726(4).
Stats. Implemented: ORS 654.001 through 654.295.
Hist: OR-OSHA Admin. Order 4-1998, f/8/28/98, ef. 10/1/98.
OR-OSHA Admin. Order 9-2006, f. 9/22/06, ef. 9/22/06.
OR-OSHA Admin. Order 4-2010, f. 7/8/10, ef. 1/1/11.

437-004-0003 Exclusive Coverage.

Division 4, Agriculture, and parts of Division 1, General Administrative Rules, are the only Oregon OSHA standards that apply to employers in 437-004-0002. Employers in 437-004-0002 will not be cited from standards in Division 2 or Division 3, Construction, unless Division 4 states they are applicable.

The following parts of Division 1 DO NOT apply to Agriculture. This division has language covering their subjects.

437-001-0760 Rules for all Workplaces. 437-004-0099 General Standards applies instead.
437-001-0765 Safety Committees and Safety Meetings. 437-004-0251 Safety Committees and Safety Meetings applies instead.

NOTE: ORS 654 (The Oregon Safe Employment Act) and specifically 654.010, commonly referred to as the General Duty Clause, applies to all places of employment in Oregon.

Stat. Auth.: ORS 654.025(2) and 656.726(4).
Stats. Implemented: ORS 654.001 through 654.295.
Hist: OR-OSHA Admin. Order 4-1998, f. 8/28/98, ef. 10/1/98.
OR-OSHA Admin. Order 4-2010, f. 7/8/10, ef. 1/1/11.

437-004-0005 Access to Employee Exposure and Medical Records.

For agricultural employers, OAR 437-002-1910.1020 applies.

Stat. Auth.: ORS 654.025(2) and 656.726(4).
Stats. Implemented: ORS 654.001 through 654.295.
Hist: OR-OSHA Admin. Order 4-1998, f/8/28/98, ef. 10/1/98.

437-004-0099 General Standards.

(1) Miscellaneous.

(a) Conspicuously post warning signs, danger signs, warning flags, warning lights, or similar devices where hazards not otherwise adequately guarded warrant their use.

(b) Keep all safeguards or devices operating properly and fully effective at providing the protection originally intended.

(c) Erect protective barriers or suitable guards when covers over openings are removed or excavations made in places accessible to workers or vehicles.

(d) Do not allow the use of intoxicating liquor or drugs on the job. Do not allow anyone to work with impaired ability to work safely.

(e) Do not allow horseplay, scuffling, practical jokes or any other similar activity.

(2) Supervision and competency.

(a) Require employees to demonstrate their ability to work safely.

(b) Provide enough supervision over employees to ensure and enforce compliance with safe operating procedures and practices.

NOTE: It is not the meaning of this rule to require a supervisor on every part of any operation, nor to prohibit workers from working alone.

(c) Take all reasonable means to require employees:

(A) To work and act in a safe and healthful manner;

(B) To work in compliance with all applicable safety and health rules;

(C) To use all means and methods, including but not limited to, ladders, scaffolds, guardrails, machine guards, safety belts and lifelines, necessary to work safely where employees are exposed to a hazard;

(D) Not to remove, displace, damage, destroy or carry off any safety device, guard, notice or warning provided for use in any employment or place of employment where safety and health rules require such use.

(d) Use a procedure, appropriate for the work, to check on the well-being of workers whose duties require them to work alone or in isolation. Instruct all workers about the procedure.

NOTE: A two-way system of signals, thoroughly understood by both parties or other form of two-way communication is acceptable. Motor noise is not acceptable as contact or as an indication of well-being.

(e) Employers must provide all health hazard control measures necessary to protect the employees' health from harmful or hazardous conditions and must maintain those control measures in good working order and assure their use.

(f) Employers must inform their employees about the known health hazards to which they are exposed, the measures taken for the prevention and control of those hazards, and the proper methods for using the control measures.

(3) Inspections. A competent person or persons must inspect every place of employment at least quarterly. OAR 437-004-0251 has other requirements related to these inspections.

(4) Investigations.

(a) The employer must investigate every work-related lost time injury. The object of the investigation is to determine how to prevent recurrence. OAR 437-004-0251 has other requirements related to these investigations.

NOTE: As mentioned above, "lost time injury" is the same as the ORS 656.005(7)(c) definition of "disabling compensable injury." That is: an injury that entitles the worker to compensation for disability or death. To fall into this category the employee must miss three consecutive calendar days beginning with the day the worker first loses time or wages from work as a result of the compensable injury. This includes weekends and holidays when they might normally be off.

(b) At the request of authorized OR-OSHA representatives, you or your superintendents, supervisors and employees must furnish all evidence and names of known witnesses to an accident.

(c) Employees in charge of work are agents of the employer in the discharge of their authorized duties, and are always responsible for:

(A) The safe performance of the work under their supervision; and

(B) The safe conduct of the crew under their supervision; and

(C) The safety of all workers under their supervision.

(5) Extraordinary hazards. When conditions arise that cause unusual or extraordinary hazards to workers, take additional means and precautions to protect workers or to control the hazardous exposure. If you cannot make the operation reasonably safe, stop work while the abnormal conditions exist or until the work is safe.

(6) Signals and signal systems.

(a) Give control signals by only one person at a time.

(A) When given, make signals clear and distinct.

(B) The person receiving the signals must understand their meaning before taking action.

(b) Act immediately on emergency stop signals from whatever source.

(c) Do not throw any type of material that can produce injury, such as rocks, wooden or metal objects, etc., as a signal.

(d) Do not give signals for the movement of materials or equipment until all persons who might be in danger by the movement are in the clear.

Employment of Minors

NOTE: Information on current regulations about the employment of minors is available from the local office of the Oregon Bureau of Labor and Industries, or by writing to: Wage and Hour Division, Oregon Bureau of Labor, 800 NE Oregon Street, Suite 1045, Portland, OR 97232. Phone: 971-673-0761. Fax: 971-673-0769.

Stat. Auth.: ORS 654.025(2) and 656.726(4).
Stats. Implemented: ORS 654.001 through 654.295.
Hist: OR-OSHA Admin. Order 4-1998, f/8/28/98, ef. 10/1/98.
OR-OSHA Admin. Order 9-2006, f. 9/22/06, ef. 9/22/06.
OR-OSHA Admin. Order 4-2010, f. 7/8/10, ef. 1/1/11.

– END OF DOCUMENT –

TABLE OF CONTENTS

437-004-0100 Universal Definitions B-1

437-004-0150 Standards Organizations B-7

437-004-0100 Universal Definitions.

(1) These definitions apply throughout Division 4, Agriculture, except that the definitions in Subdivision 4/W, adopted from 40 CFR 170, Worker Protection Standard, apply to the rules within that Subdivision.

Accepted – Something is accepted if:

(A) A nationally recognized testing laboratory has inspected it and found it to conform to specified plans or to procedures of applicable codes; or

(B) It is verified by design, evaluation, or inspection by a registered professional engineer; or

(C) It is acknowledged by the authority having jurisdiction, the agency, office, or organization that is responsible for approving specific equipment, materials, installations, or procedures. (Examples of such authorities include the U.S. Department of Transportation, the U.S. Coast Guard, the Oregon Building Codes Division, and the Office of the State Fire Marshal.)

Agricultural employer – means any person, corporation, association, or other legal entity who meets the definition of an employer in ORS 654.005(5) and who:

(A) Owns or operates an agricultural establishment; or

(B) Recruits and supervises employees who work for an agricultural establishment; or

(C) Is responsible for the management or condition of, or exercises direction and control over the production on, an agricultural establishment.

Agricultural establishment – means a farm, ranch, nursery, greenhouse, or production facility that is a place of employment and is engaged in the activities described in Division 4/A, 437-004-0002 Scope.

Approved – means acceptable for the purposes of rule compliance, under the following criteria:

(A) It is accepted, or certified, or listed, or labeled or otherwise determined to be safe by a nationally recognized testing laboratory; or

(B) If an installation or equipment is of a kind which no nationally recognized testing laboratory accepts, certifies, lists, labels, or determines to be safe, it has been inspected or tested by another authority having jurisdiction and found to be in compliance with the provisions of the applicable code; or

(C) Custom-made equipment or related installations that are designed and fabricated for a certain intended use by its manufacturer. The employer must keep and make available the test data that is used as the basis of this approval, for inspection.

Boiling point – The temperature at which the liquid form of a substance changes into a vapor, at a standard atmospheric pressure. The initial boiling point of a substance is determined according to test methods specified in Appendix B to Division 2/Z, 1910.1200, Hazard Communication Standard.

CAS – is the Chemical Abstracts Service Registry Number, a unique numerical identifier assigned by the Chemical Abstracts Service to every chemical described in the open scientific literature.

Capacity – is the maximum load or severity of service (determined by the manufacturer or a qualified engineer) that a tool, machine, equipment, structure, or material is expected to withstand without failure, deformation, separation or fracture.

Certified – is something that:

(A) Was tested and found by a nationally recognized testing laboratory to meet nationally recognized standards or to be safe for use in a specified manner, or

(B) Is of a kind whose production is periodically inspected by a nationally recognized testing laboratory, and

(C) Shows a label, tag, or other record of certification.

Combustible – A substance or material that is able or likely to catch fire and burn.

Combustible liquid – The "combustible liquid" classification is no longer used in Division 4 rules because it was eliminated by the globally harmonized classification and labeling system (GHS) adopted in OSHA's Hazard Communication Standard. Any liquid with a flash point of 199.4°F (93 degrees C.) or less is considered to be one of the four categories of flammable liquids. (See "Flammable liquids," below.)

NOTE: The term "combustible liquid" is still used by the National Fire Protection Association (NFPA) system of classification and by the Oregon State Fire Marshal to classify liquids that will burn but do not ignite as easily as flammable liquids. The NFPA system defines some chemicals as "combustible liquids" that would be included as a category of "flammable liquid" in the OSHA/GHS classification system. (See Appendix A to Subdivision 4/H, 437-004-0720 Flammable Liquids, for a comparison of the GHS and NFPA systems of classification of flammable/combustible liquids.)

Competent person – is a person who, because of training and experience, can identify existing and predictable hazards in equipment, material, conditions or practices; and, who has the knowledge and authority to take corrective steps.

Explosive – something capable of causing damage to the surroundings by chemical reaction. Explosives are defined in Appendix B to 1910.1200 – Physical Hazard Criteria at B.1 EXPLOSIVES.

Farming – Is the production of agricultural field crops, tree crops; horticultural specialties, greenhouse crops; and the production of livestock and animal specialties. Farming includes farm labor and management services; agricultural services and support activities (such as soil preparation; crop cultivation, protection, and harvesting;) and, the basic preparation of the crop or commodity for market. The farming production process is typically completed at the "farm gate" – that is, at the point of first sale or price determination.

NOTE: Throughout this division, the term "farming," "agriculture," "production agriculture," and "agricultural operations" are synonymous.

Flammable – Capable of being easily ignited, burning intensely, or having a rapid rate of flame spread. Flammable substances are defined in Appendix B to 1910.1200 – Physical Hazard Criteria at B.2 FLAMMABLE GASES, B.3 FLAMMABLE AEROSOLS, B.6 FLAMMABLE LIQUIDS, and B.7 FLAMMABLE SOLIDS.

Flammable liquids – are liquids having a flash point at or below 199.4 degrees F. (93 degrees C.) As defined in the globally harmonized system of classification and labeling (GHS) adopted in OSHA's Hazard Communication Standard, flammable liquids are divided into four categories as follows:

(A) Category 1 includes liquids that have a flashpoint below 73.4 degrees F. (23 degrees C.) and have a boiling point at or below 95 degrees F. (35 degrees C.)

(B) Category 2 includes liquids that have a flashpoint below 73.4 degrees F. (23 degrees C.) and have a boiling point above 95 degrees F. (35 degrees C.)

(C) Category 3 includes liquids that have a flashpoint in a temperature range from at or above 73.4 degrees F. (23 degrees C.) to at or below 140 degrees F. (60 degrees C.)

(D) Category 4 includes liquids that have a flashpoint in a temperature range from above 140 degrees F. (60 degrees C.) to at or below 199.4 degrees F. (93 degrees C.)

NOTE: Examples of some common flammable liquids are:
Category 1: Diethyl ether (solvent sometimes used in starting fluid).
Category 2: Gasoline (Benzene, Ethanol).
Category 3: Kerosene, Stoddard Solvent.
Category 4: Diesel fuel, Naphthalene.

Flashpoint – is the minimum temperature at which a liquid gives off vapor within a test vessel in sufficient concentration to form an ignitable mixture with air near the surface of the liquid, as determined by specific testing methods. These test methods are specified in Appendix B to Division 2/Z, 1910.1200, Hazard Communication Standard.

Hazardous Chemical – is any chemical which is classified, under the requirements of the Hazard Communication Standard, as a physical hazard or a health hazard, a simple asphyxiant, combustible dust, pyrophoric gas, or hazard not otherwise classified.

NOTE: See Division 2/Z, 1910.1200 Hazard Communication Standard, for more information.

Ignition source – the origin of something that results in a fire or an explosion. Examples include open flames; smoking; cutting and welding; hot surfaces and radiant heat; frictional heat; static, electrical, and mechanical sparks; chemical and physical-chemical reactions; spontaneous ignition; and lightning.

Labeled – Something is labeled if:

(A) It has an attached label, symbol, or other identifying mark of a nationally recognized testing laboratory that makes periodic inspections of the production of such equipment; or

(B) The attached information indicates compliance with nationally recognized standards or tests to determine safe use in a specified manner.

Listed – is something mentioned in a list that:

(A) Is published by a nationally recognized laboratory that makes periodic inspection of the production of such equipment, and

(B) States such equipment meets nationally recognized standards or was tested and found safe for use in a specified manner.

Nationally Recognized Testing Laboratory – (NRTL) is defined in 1910.7 Definition and Requirements for a Nationally Recognized Testing Laboratory and OAR 437-002-0007 Oregon Rule on Testing and Certification Program. (Examples of organizations in this category are Factory Mutual Engineering Corporation, and Underwriters' Laboratories.)

Place of employment – is every place (fixed, movable or moving) where an employee works or is intended to work. It includes every place where (either temporarily or permanently) there is any activity related to an employer's business, including a labor camp.

NOTE: "Place of employment" does not include a place where the only employment involves nonsubject workers employed in or about a private home; or a farm where only the farm's family members are employed.

Qualified person – is a person who has a recognized degree, certification, professional standing, knowledge, training or experience; and has successfully demonstrated the ability to perform the work, or solve or resolve problems relating to the work, subject matter, or project.

Reasonable means – is what a prudent person, familiar with the circumstances of the industry would do to work in a safe and healthful manner.

Safeguard – is any form of safety device or equipment; personal protective equipment; guard or barricade; warning device, sign, or method; or a process prescribed or adopted for the protection of an employee.

Substantial – means constructed with sufficient strength or installed to provide ample support to withstand loads to which the structure or device may be subjected.

Worker – is identical in every respect to "employee" as defined in ORS 654.005(4) including:

(A) Any individual, including a minor, whether lawfully or unlawfully employed, who engages to furnish services for a remuneration, financial or otherwise, subject to the direction and control of an employer; and

(B) Any individual who is provided with workers' compensation coverage as a subject worker pursuant to ORS chapter 656, whether by operation of law or by election.

Workplace – See "Place of Employment," above.

Stat. Auth.: ORS 654.025(2) and 656.726(4).
Stats. Implemented: ORS 654.001 through 654.295.
Hist: OR-OSHA Admin. Order 4-1998, f. 8/28/98, ef. 10/1/98.
OR-OSHA Admin. Order 3-2014, f. 8/8/14, ef. 8/8/14.

437-004-0150 Standards Organizations.

Division 4 references various standards from the following organizations. More information is available from:

(ACGIH) American Conference of Governmental Industrial Hygienists
http://www.acgih.org/
1330 Kemper Meadow Drive
Cincinnati, Ohio 45240, USA
Customers/Members Phone: 513-742-2020
Fax: 513-742-3355

(ANSI) American National Standards Institute
http://www.ansi.org/
ANSI Standards Store
Customer Service Department
25 W 43rd St, 4th Floor
New York, NY 10036
Phone: (212) 642-4980
Fax: (212) 302-1286

(API) American Petroleum Institute
http://www.api.org/
1220 L Street, NW
Washington, DC 20005-4070
(202) 682-8000

(ASABE) American Society of Agricultural and Biological Engineers
http://www.asabe.org/standards.aspx
2950 Niles Rd
St. Joseph, MI 49085
Toll-Free: (800) 371-2723
Fax: (269) 429-3852

(ASHRAE) American Society of Heating, Refrigeration, and Air Conditioning Engineers
www.ashrae.org
ASHRAE Bookstore
http://www.techstreet.com/ashrae/index.html
3916 Ranchero Dr
Ann Arbor, MI 48108
Phone: (800) 699-9277
Fax: (734) 780-2046

(ASME) American Society of Mechanical Engineers
http://www.asme.org/
Two Park Avenue
New York, NY 10016-5990
Phone: (800) 843-2763

ASTM International
(Formerly American Society for Testing and Materials)
http://www.astm.org
Sales and Customer Support
PO Box C700
West Conshohocken, PA 19428-2959
Phone: (877) 909-2786

(AWS) American Welding Society
http://www.aws.org
AWS Bookstore/Customer Service
13301 NW 47th Ave
Miami, FL 33054
Toll-free: 888-WELDING
Fax: (305) 826-6195

(CGA) Compressed Gas Association
http://www.cganet.com
Customer Service
14501 George Carter Way
Suite 103
Chantilly VA 20151
Phone: (703) 788-2700
Fax: (703) 961-1831

(CMAA) Crane Manufacturers Association of America
http://www.mhi.org/cmaa
8720 Red Oak Blvd
Suite 201
Charlotte, NC 28217
Phone: (704) 676-1190
Fax: (704) 676-1199

FM Global
(Formerly Factory Mutual Engineering Corporation)
www.fmglobal.com
Customer Service (Resource Catalog)
Phone: (877) 364-6726

(IAPMO) International Association of Plumbing and Mechanical Officials
http://www.iapmo.org
4755 E Philadelphia St
Ontario, CA 91761
Phone: (909) 472-4100
Fax: (909) 472-4150

(NFPA) National Fire Protection Association
http://www.nfpa.org
1 Batterymarch Park
Quincy, MA 02169-7471
Customer Sales/Member Services
Phone: (800) 344-3555
Fax: (800) 593-6372

(NIOSH) National Institute of Occupational Safety and Health
http://www.cdc.gov/niosh/
Centers for Disease Control and Prevention
Clifton Rd. Atlanta
Atlanta, GA 30333
1-800-CDC-INFO (1-800-232-4636)

(RMA) Rubber Manufacturers Association
http://www.rma.org/publications/
1400 K Street, NW, Suite 900
Washington, DC 20005
(202) 682-4800

SAE International
(Formerly Society of Automotive Engineers)
http://www.sae.org
400 Commonwealth Dr.
Warrendale, PA 15096
Phone: (877) 606-7323
Fax: (724) 776-0790

(UL) Underwriters Laboratories
www.ul.com/
333 Pfingsten Rd.
Northbrook, IL 60062
(847) 272-8800

Stat. Auth.: ORS 654.025(2) and 656.726(4).
Stats. Implemented: ORS 654.001 through 654.295.
Hist: OR-OSHA Admin. Order 4-1998, f/8/28/98, ef. 10/1/98.
OR-OSHA Admin. Order 3-2014, f. 8/8/14, ef. 8/8/14.

TABLE OF CONTENTS

437-004-0240 Safety Orientation for Seasonal C-1

437-004-0251 Safety Committees and Safety Meetings C-2
- **(1)** Application C-3
- **(2)** General requirements C-3
- **(3)** Safety committees C-3
- **(4)** Safety Meetings C-5

437-004-0240 Safety Orientation for Seasonal Workers.

Definitions:

Hand-labor operations (as defined in OAR 437-004-1110(3) and reprinted here for ease of the reader) means agricultural activities or agricultural operations performed by hand or with hand tools, including:

(A) Hand-cultivation, hand-weeding, hand-planting, and hand-harvesting of vegetables, nuts, fruits, seedlings, or other crops (including mushrooms);

(B) Hand packing or sorting, whether done on the ground, on a moving machine, or in a temporary packing shed in the field.

Seasonal workers are employed in a job tied to a certain time of year by an event or pattern and for not more than 10 months in a calendar year.

Note: The following are only minimum requirements. Other parts of the agriculture standard require training for certain types of work in addition to these general orientation requirements.

(1) Application: This applies to agricultural employers with seasonal workers.

(2) Basic Safety Awareness Requirements.

(a) You must provide seasonal workers with at least the following information:

- at their orientation meeting before beginning work for the first time, and;
- when work conditions or locations change in a way that could reasonably affect their safety or health.

(A) Safety and health rules for their work.

(B) Procedures for workers to contact supervisors or managers in case of accident, illness, or problems related to safety or health.

(C) Procedures for treating injured or sick workers and for summoning emergency assistance.

(D) The location of posted safety and health information.

(b) If you have employees with language barriers, you must communicate safety awareness information in a manner that workers can understand. Include content that is either translated into the language used to hire and supervise these employees or that is otherwise effectively conveyed, such as through visual media.

NOTES: Division 4/Z, Hazard Communication, OAR 437-004-9800(7)(d), requires employers to give a copy of the Oregon OSHA's *Safe Practices When Working Around Hazardous Agricultural Chemicals (*#1951) to every employee. This publication provides an outline of the information that agricultural employers must provide during the initial training for workers under both the hazard communication rules and the pesticide worker protection standard (WPS) as covered in Division 4/W, 170.130(c). Contact Oregon OSHA for copies of this publication and information about available language formats.

You must provide the initial WPS training if pesticide products labeled with "agricultural use requirements" have been used at the place of employment during the 30 days prior to the worker's first day of employment or will be used during the worker's period of employment. Additional WPS training requirements apply on the sixth day of employment, and in other work situations that fall under the definition of "pesticide handler." See Division 4/W for these additional training requirements.

For seasonal workers doing hand-labor operations only, you must provide all of the following to meet the initial training requirements under the WPS, this safety awareness orientation rule, and the hazard communication rule.

- ✓ The training outlined in *Safe Practices When Working Around Hazardous Agricultural Chemicals* publication.
- ✓ The basic safety awareness requirements information in OAR 437-004-0240.
- ✓ Access to material safety data sheet information for the hazardous chemicals to which they reasonably may be exposed.

Stat. Authority: ORS 654.025(2) and 656.726(4).
Stats. Implemented: ORS 654.001 through 654.295.
Hist: OR-OSHA Admin. Order 2-1999, f. 4/30/99, ef. 4/30/99.
OR-OSHA Admin. Order 9-2006, f. 9/22/06, ef. 9/22/06.
OR-OSHA Admin. Order 4-2010, f. 7/8/10, ef. 1/1/11.

437-004-0251 Safety Committees and Safety Meetings.

Definitions:

Management – includes all supervisors and persons who regularly exercise direction and control over workers.

Workers – for the purposes of determining the need for a safety committee, include both full and part-time employees.

Purpose. The purpose of safety committees and safety meetings is to bring workers and management together in a non-adversarial, cooperative effort to promote safety and health in each workplace. A safety committee assists the employer by establishing procedures, performing inspections, evaluating safety and health programs, and recommending changes in workplace conditions and practices. By participating in safety meetings, workers and management work together to recognize hazards and to make safety and health improvements at the workplace.

(1) Application: This applies to agriculture employers with workers other than seasonal workers covered in OAR 437-004-0240.

(2) General Requirements.

(a) You must either have an effective safety committee or hold effective safety meetings. (See Table 1.)

(b) If you have employees with language barriers, you must communicate safety awareness information in a manner that workers can understand. Include content that is either translated into the language used to hire and supervise these employees or that is otherwise effectively conveyed, such as through visual media.

(c) If you are a labor contractor, you must have a committee or meetings based on the number of employees that you direct and control.

NOTE: Nothing in these rules prevents you from having seasonal workers attend safety meetings.

Table 1

IF:	You can have a safety committee	You can have safety meetings instead of a committee
You have 10 or fewer workers at a location	Yes	Yes
You have more than 10 workers at a location	Yes	No
You have satellite or auxiliary worksites with 10 or fewer workers at each location	Yes	Yes

(3) Safety Committees.

(a) Management's Duties.

(A) Pay members at their regular rate of pay for attending the meetings, trainings, inspections, and other functions required by this rule.

(B) Provide committee members with timely access to these rules (OAR 437-004-0251) and to all Oregon OSHA standards that apply to their work.

(C) Respond to safety committee recommendations within a reasonable time.

(b) Effective Safety Committees. You must ensure that the committee produces at least the following results:

(A) Employees are aware of the committee, who is on it, when it meets and how information is shared between management and workers.

(B) Employees are aware of their right to have their safety and health concerns heard by the committee.

(C) Employees know the employer's method or system for reporting safety and health concerns, incidents, and accidents.

(c) Centralized Safety Committee. You may choose a centralized safety committee if all of the following apply:

(A) You have more than one geographic employment location.

(B) The locations are close enough to ensure that a joint committee meets the requirements in OAR 437-004-0251(3)(b), Effective Safety Committees.

(C) The joint committee represents the safety and health concerns of all employees at all locations.

(d) Membership and Training.

(A) Have at least two members on your committee if you have 20 or fewer workers. Have at least four members if you have more than 20 workers. Members should represent the major activities of your business.

(B) Have an equal number of employer-selected members and worker-elected or volunteer members. If both parties agree, the committee may have more worker-elected or volunteer members.

NOTE: Management can select a supervisor or other employee to represent them. Workers can volunteer or elect any peer as a representative.

(C) Provide training on the purpose and operation of the safety committee, in hazard identification, and in the principles of accident investigation.

NOTE: Oregon OSHA provides no-cost, safety committee-related training available through the web site at www.orosha.org/education.html.

(D) Have members serve a minimum of one year, when possible.

(E) Have a majority agree on a chairperson.

(e) Safety Committee Functions. Ensure that the committee does all of the following:

(A) Meets at least monthly, except in those months when quarterly inspections occur.

(B) Establishes procedures for doing the quarterly safety and health inspections required by OAR 437-004-0099(3). Persons performing inspections must be trained in hazard identification.

(C) Reviews all quarterly safety and health inspection reports and makes recommendations to eliminate identified hazards.

(D) Works with management to establish procedures for investigating all safety incidents, accidents, work-related illnesses, and fatalities. Persons investigating these events must be trained in the principles of accident investigation.

NOTE: OAR 437-004-0099(4) requires agricultural employers to investigate every work-related lost-time injury.

(E) Evaluates all investigation reports and makes recommendations for ways to prevent recurrence.

(F) Sets guidelines for the training of safety committee members.

(G) Evaluates the accident and illness prevention programs at the workplace.

(f) Safety Committee Records.

(A) Ensure that records have at least the following information.

(i) Meeting date.

(ii) Names of those attending.

(iii) All reports, inspections, evaluations, recommendations, management responses, and other safety and health-related items brought before the committee.

(iv) The date that management agrees to respond to specific recommendations.

(B) Make these records available to all employees and to Oregon OSHA representatives, upon request.

(C) Maintain these records for at least three years.

(4) Safety Meetings.

(a) Effective Safety Meetings. You must ensure that safety meetings produce at least the following results:

(A) Employees are aware of safety meetings, when and where they are held, and how information is shared between management and workers.

(B) Employees know that they have a right to have their safety and health concerns heard and questions answered at safety meetings.

(C) Employees know the employer's method or system for reporting safety and health concerns, incidents, and accidents.

(b) Meeting Requirements. Safety meetings must have all of the following characteristics:

(A) Include all available employees.

(B) Include at least one employer representative.

(C) Be on company time with attendees paid at their regular rate of pay.

NOTE: If you have questions about this, contact the Oregon Bureau of Labor and Industries.

(D) Occur at least monthly.

(c) Meeting content. Safety meetings must include the following:

(A) Information about safety and health issues relevant to the workplace.

(B) Reports from quarterly workplace safety inspections and from investigations of any work-related, time-lost injuries, including suggested corrective measures.

NOTE: OAR 437-004-0099(3) requires a competent person to inspect the agricultural workplace at least quarterly. OAR 437-004-0099(4) requires agricultural employers to investigate every work-related lost-time injury. See Division 4/A for details.

(C) Opportunities for employees to ask questions, bring up safety and health concerns, and make suggestions.

(D) Information that is presented in a manner that can be understood by all employees.

(d) Meeting Records.

(A) Meeting notes must include the following information:

(i) Meeting date.

(ii) Names of those attending.

(iii) Topics discussed.

(B) Keep the records for at least 3 years.

(C) Make the records available to your employees and to Oregon OSHA representatives, upon request.

NOTE: If all your employees attend a safety meeting, you are only required to record the meeting date and a list of the employees attending.

Stat. Auth.: ORS 654.025(2) and 656.726(4).
Stats. Implemented: ORS 654.001 through 654.295.
Hist: OR-OSHA Admin. Order 4-2010, f. 7/8/10, ef. 1/1/11.

– END OF DOCUMENT –

TABLE OF CONTENTS

437-004-0310 Working Surfaces D-1
(1) Scope D-1
(2) Housekeeping D-1
(3) Aisles, walkways, inclines and passageways D-1
(4) Covers and guardrails D-1
(5) Surface loads D-1
(6) Barriers D-1
(7) Vertical clearances D-1
(8) Working above other workers D-2

437-004-0320 Guarding Floor and Wall Openings and Holes D-2
(1) Definitions D-2
(2) Floor openings and floor holes D-3
(3) Wall openings and holes D-4
(4) Open-sided floors, platforms, and runways D-4
(5) Stairway railings and guards D-5
(6) Railing, toeboards, and cover specifications D-6

437-004-0330 Fixed Industrial Stairs D-8
(1) Definitions D-8
(2) Application D-9
(3) Where fixed stairs are required D-9
(4) Stair strength D-9
(5) Stair width D-9
(6) Angle of stairway rise D-10
(7) Stair treads D-10
(8) Stairway platforms D-10
(9) Railings and handrails D-10
(10) Vertical clearance D-10

437-004-0340 Portable Ladders D-11
(1) Definitions D-11
(2) Application D-12
(3) Ladder selection D-12
(4) Condition of wood ladders D-12
(5) General requirements – all ladders D-12
(6) General requirements – portable stepladders D-13
(7) Use – all ladders D-13
(8) Use of specific types of ladders D-14

437-004-0350 Orchard Ladders D-17
(1) Application D-17
(2) Maintenance D-17
(3) Training D-17
(4) Use and care D-17

437-004-0360 Fixed Ladders D-18
(1) Definitions D-18
(2) Design requirements D-19
(3) Specific features D-20
(4) Clearance D-21
(5) Special requirements D-24
(6) Pitch D-28
(7) Maintenance D-28

437-004-0370 Scaffolding D-29
(1) Scope D-29
(2) Definitions D-29
(3) General requirements for all scaffolds D-30
(4) General requirements for wood pole scaffolds D-31
(5) Tubular welded frame scaffolds D-35
(6) Boatswain's chairs D-36
(7) Horse scaffolds D-37
(8) Ladder-jack scaffolds D-37
(9) Roofing brackets D-38
(10) Crawling boards or chicken ladders D-38
(11) Manually propelled mobile scaffolds D-38

437-004-0380 Manually Propelled Mobile Ladder Stands and Scaffolds (Towers) D-39

437-004-0390 Other Working Surfaces D-40
(1) Dockboards (bridge plates) D-40
(2) Floors D-40
(3) Ramps and runways D-40

437-004-0310 Working Surfaces.

(1) Scope. This section applies to all places of agricultural employment. Measures to control toxic materials are outside the scope of this section.

(2) Housekeeping. Floors, work areas, aisles and passageways must be in good repair and must not have protruding nails, unevenness, obstructions, debris or loose boards that create a hazard.

(3) Aisles, walkways, inclines and passageways.

(a) There must be sufficient clearance for safe operation of mechanical handling equipment in aisles, at loading docks, through doorways and at turns. Aisles and passage- ways must be clear and in good repair with no obstructions that could be a hazard.

(b) Mark permanent aisles and passageways.

(c) Aisles, passageways, and walkways must be wide enough for safe work but never less than 22 inches wide. Passageways more than 4 feet above the ground or floor level must have standard guardrails.

(d) Fixed inclined walkways must be at least 22 inches wide, incline at no more than 24 degrees and be securely fastened at the top and bottom. They must have guardrails on each open side.

(e) Inclined walkways that may be slippery must have anti-slip surfaces or cleats secured at uniform intervals of not more than 18 inches, and extending the full width of the walkway.

(f) Inclines from floor to floor, without open sides, used instead of stairways must have standard handrails according to the requirements for stairways.

(g) Ramps for wheelbarrows, if made of planking, must have an odd number of planks with no cleats on the center plank.

(4) Covers and guardrails. There must be covers and/or guardrails on each open side to protect people from the hazards of open pits, tanks, vats, excavations, etc.

(5) Surface loads. For all new and remodel construction after December 1, 1997, post the load capacities on overhead storage areas. Do not allow overloading.

(6) Barriers. There must be protective barriers or suitable guards for uncovered openings or excavations that are accessible to vehicle or pedestrian traffic. Use warning lights or flares if working at night.

(7) Vertical clearances. There must be a vertical clearance of at least 6 1/2 feet over work areas. Where it is impractical to provide this clearance, use padding, contrasting paint or similar warnings on overhead obstructions.

NOTE: This does not apply to crop storage areas where people are there for short periods.

(8) Working above other workers. Areas above other workers, for handling or mixing acids, caustics, or other harmful materials must have water-tight floors that drain to a safe location, except where workers underneath wear personal protective equipment suitable for the hazard.

Stat. Auth.: ORS 654.025(2) and 656.726(4).
Stats. Implemented: ORS 654.001 through 654.295.
Hist: OR-OSHA Admin. Order 4-1998, f/8/28/98, ef. 10/1/98.

437-004-0320 Guarding Floor and Wall Openings and Holes.

(1) Definitions. Unless otherwise stated, these terms mean:

Floor hole. An opening less than 12 inches but more than 1-inch in its least dimension, in any walking surface, through which materials but not persons may fall. This includes belt holes, pipe openings, or slot openings.

Floor opening. An opening 12 inches or more in its least dimension, in any walking surface through which persons may fall including hatchways, stairs or ladder openings, pits, or large manholes. Floor openings occupied by elevators, dumb waiters, conveyors, machinery, or containers are excluded from this subdivision.

Handrail. A single bar or pipe supported on brackets from a wall or partition, and used as a handhold for persons on stairs or ramps.

Platform. An elevated work space, such as a balcony or mezzanine for the operation of machinery and equipment.

Runway. An elevated passageway, such as a footwalk along shafting or a walkway between buildings.

Stair railing. A vertical barrier along exposed sides of a stairway to prevent people from falling.

Standard railing. A vertical barrier along exposed edges of a floor opening, wall opening, ramp, platform, or runway to prevent people from falling.

Standard strength and construction. Any construction of railings, covers, or other guards that meets the requirements of **OAR 437-004-0320(6)**.

Toeboard. A vertical barrier at floor level along exposed edges of a floor opening, wall opening, platform, runway, or ramp to prevent things from falling.

Wall hole. An opening less than 30 inches but more than 1-inch high, of unrestricted width, in any wall or partition; such as a ventilation hole.

Wall opening. An opening at least 30 inches high and 18 inches wide, in any wall or partition, through which persons may fall; such as a window, doorway or chute opening.

(2) Floor openings and floor holes.

(a) Stairway floor openings must have a standard railing that complies with **OAR 437-004-0320(6)**, on all exposed sides (except at entrance to the stairway). For infrequently used stairways where traffic across the opening prevents the use of a fixed standard railing, the guard must be a hinged floor opening cover of sufficient strength and removable standard railings on all exposed sides (except at entrance to the stairway).

(b) Ladder way floor openings or platforms must have a standard railing with standard toeboard on all exposed sides (except at entrance to opening). The passage through the railing must either have a swinging gate or be offset so that a person cannot walk directly into the opening.

(c) Hatchways and chute floor openings must have one of the following:

(A) Hinged floor opening cover with standard railings. When the opening is not in use, close the cover or guard the exposed sides at both top and intermediate positions by removable standard railings.

(B) A removable railing with toeboard on not more than two sides of the opening and fixed standard railings with toeboards on all other exposed sides. The removable railings must be in place when the opening is not in use.

(C) Where operating conditions necessitate the feeding of material into any hatchway or chute opening, protection must prevent a person from falling through the opening.

(d) Skylight floor openings and holes must have a standard skylight screen or a fixed standard railing on all exposed sides.

(e) Pit and trapdoor floor openings must have a floor opening cover of sufficient strength. While the cover is not on, an attendant must be at the pit or trap opening or there must be removable standard railings on all sides.

(f) Manhole floor openings must have a standard manhole cover that need not be hinged in place. While the cover is off, there must be an attendant at the manhole opening or it must have removable standard railings.

(g) Temporary floor openings must have standard railings, or an attendant on open sides.

(h) Floor holes into which persons can accidentally walk must have either:

(A) A standard railing with standard toeboard on all exposed sides, or

(B) A floor hole cover of sufficient strength. While the cover is off, the floor hole must have an attendant or a removable standard railing.

(i) Floor holes into which persons cannot accidentally walk must have a cover that leaves no openings more than 1-inch wide. The cover must be securely held in place to prevent tools or materials from falling through.

(j) Where doors or gates open directly on a stairway, there must be a platform, and the swing of the door must not reduce the effective length to less than 20 inches.

(3) Wall openings and holes.

(a) Wall openings with a drop of more than 4 feet must have one of the following:

(A) Rail, roller, picket fence, half door, or equivalent barrier. Where there is exposure below to falling materials, there must be a toe board or the equivalent. When the opening is not in use for handling materials, the guard must be in position regardless of a door on the opening. In addition, there must be a grab handle on each side of the opening with its center about 4 feet above floor level and of standard strength and mounting.

(B) Extension platform to receive hoisted materials for handling. It must have side rails or equivalent guards of standard specifications.

(b) Chute wall openings with a drop of more than 4 feet must have one or more of the barriers in **(3)(a)** above or as required by the conditions.

(c) Window wall openings with a drop of more than 4 feet, and where the bottom of the opening is less than 3 feet above the floor or platform, must have a guard of slats, grill work (as in **OAR 437-004-0320(6)(k)**), or standard railing.

(d) Where the window opening is below the landing, or platform, there must be a standard toeboard in addition to requirements in **(c)** above.

(e) Every temporary wall opening must have adequate guards but these need not be of standard construction.

(f) Where there is a hazard of materials falling through a wall hole, and the lower edge of the near side of the hole is less than 4 inches above the floor, and the far side of the hole more than 5 feet above the next lower level, the hole must have a standard toeboard, or a solid enclosing screen, or one as described in **OAR 437-004-0320(6)(k)**.

(4) Open-sided floors, platforms, and runways.

(a) Open-sided floors or platforms 4 feet or more above adjacent floor or ground level must have a standard railing (or the equivalent from **OAR 437-004-0320(6)(c)**) on all open sides except where there is entrance to a ramp, stairway, or fixed ladder. The railing must have a toeboard where, beneath the open sides:

(A) Persons can pass,

(B) There is moving machinery, or

(C) There is equipment with which falling materials could create a hazard.

When operating conditions make it necessary, the railing may be left off of one side if the platform is at least 18 inches wide.

Exception: When things regularly have to be passed over the edge of the floor, as in hay stor age, there is no requirement for the intermediate railing and toeboard. This exception applies also where the railing is set back from the edge 12 inches or more. There is no requirement for any railing when the employer can show that it creates a greater hazard than working without one.

(b) Runways must have a standard railing (or the equivalent from **OAR 437-004-0320 (6)(c)**) on all open sides 4 feet or more above floor or ground level. Where the use of tools, machine parts, or materials on the runway is likely, there must be a toeboard on each exposed side.

NOTE: Runways exclusively for special purposes may omit the railing on one side when operating conditions make it necessary, if the runway is at least 18 inches wide. Where persons entering runways have exposure to machinery, electrical equipment, or other dangers, additional guarding may be required for protection.

(c) Regardless of height, open-sided floors, walkways, platforms, or runways above or adjacent to dangerous equipment must have a standard railing and toeboard on open sides.

(5) Stairway railings and guards.

(a) Stairs with four or more risers must have standard stair railings or standard handrails from **(A)** through **(E)** below. Measure the width of the stairs clear of all obstructions except handrails:

Oregon Note: Count each vertical distance of the overall vertical height to determine the total number of risers.

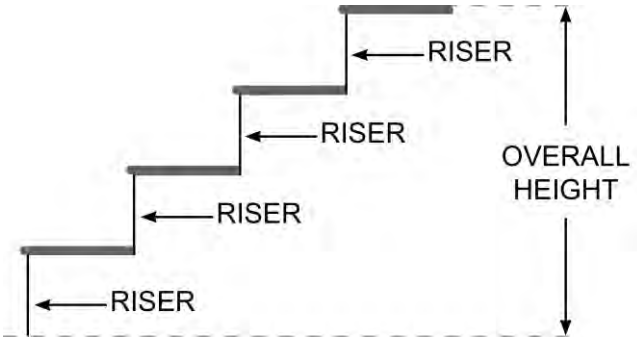

(A) On stairways less than 44 inches wide with both sides enclosed, at least one handrail, preferably on the right side descending.

(B) On stairways less than 44 inches wide with one side open, at least one stair railing on the open side.

(C) On stairways less than 44 inches wide with both sides open, one stair railing on each side.

(D) On stairways more than 44 inches wide but less than 88 inches wide, one handrail on each enclosed side and one stair railing on each open side.

(E) On stairways 88 or more inches wide, one handrail on each enclosed side, one stair railing on each open side, and one intermediate stair railing approximately midway of the width.

(b) Winding stairs must have a handrail offset to prevent walking on any treads less than 6 inches wide.

(6) Railing, toeboards, and cover specifications.

(a) A standard railing must have a top rail, intermediate rail, and posts, and must be between 36 and 44 inches high from the upper surface of the top rail to the walking surface. The top rail must be smooth. The intermediate rail must be about halfway between the top rail and the floor, platform, runway, or ramp. The ends of the rails must not overhang the terminal posts except where such overhang is not a projection hazard.

(b) A stair railing must be similar to a standard railing but the height must be between 30 and 36 inches from upper surface of top rail to surface of tread in line with face of the riser at the forward edge of the tread.

(c)

(A) For wood railings, the posts must be at least 2-inch by 4-inch stock spaced not to exceed 6 feet; the top and intermediate rails must be at least 2-inch by 4-inch stock. If the top rail is made of two right-angle pieces of 1-inch by 4-inch stock, posts may be spaced on 8-foot centers, with 2-inch by 4-inch intermediate rail.

(B) For pipe railings, posts and top and intermediate railings must be at least 1 1/2 inches nominal diameter with posts spaced not more than 8 feet on center.

(C) For structural steel railings, posts and top and intermediate rails must be of 2-inch by 2-inch by 3/8-inch angles or other metal shapes of equivalent bending strength with posts spaced not more than 8 feet on center.

(D) The anchoring of posts and framing of members for railings of all types must be strong enough that the completed structure can withstand a load of at least 200 pounds applied in any direction at any point on the top rail.

(E) Other types, sizes, and arrangements of railing construction are acceptable if they have:

(i) A smooth-surfaced top rail at a height above floor, platform, runway, or ramp level of 42 inches nominal, and;

(ii) A strength to withstand at least the minimum requirement of 200 pounds top rail pressure, and;

(iii) Protection between top rail and floor, platform, runway, ramp, or stair treads, equivalent at least to that afforded by a standard intermediate rail.

(d) A standard toeboard must be 4 inches nominal in height from its top edge to the level of the floor, platform, runway, or ramp. It must be securely fastened in place and with not more than 1/4-inch clearance above floor level. It may be made of any strong material either solid or with openings not more than 1-inch in greatest dimension.

Where material can fall through the space between the standard toeboard and midrail, there must be paneling or screen from floor to the midrail. If material can fall through the space between the midrail and top rail, there also must be paneling or screen there.

(e)

(A) A handrail must have a lengthwise member mounted directly on a wall or partition. Mounting brackets must attach to the lower side of the handrail so that the top and sides are smooth. The handrail must furnish an adequate handhold for anyone grasping it to avoid falling.

(B) Handrails must be 30 to 34 inches in height from the upper surface of the handrail to the surface of the tread in line with the face of the riser or to the surface of the ramp.

(C) Hardwood handrails must be at least 2 inches in diameter. Metal pipe handrails must be at least 1 1/2 inches in diameter. Brackets must be long enough to give at least 1 1/2 inches clearance between handrail and wall. Bracket spacing must be not more than 8 feet.

(D) Handrails must be able to withstand a load of at least 200 pounds applied in any direction at any point on the rail.

(f) All handrails and railings must have a clearance of at least 1 1/2 inches between the handrail or railing and any other object.

(g) Floor opening covers may be of any material that meets the following strength requirements:

(A) Trench or conduit covers and their supports must be able to stand a load of at least 20,000 pounds if they are where vehicles can pass over them.

(B) Floor opening covers may be made of any material strong enough to handle the load. Covers may project not more than 1-inch above the floor level if all edges are beveled to an angle with the horizontal of not more than 30 degrees. All hinges, handles, bolts, or other parts must be flush with the floor or cover surface.

(h) Skylight screens must be capable of withstanding a load of at least 200 pounds applied perpendicularly on the screen. They must be strong enough that under ordinary loads or impacts, they will not deflect downward sufficiently to break the glass below them. Those with grillwork must have openings not more than 4 inches square. Those of slatwork must have openings not more than 2 inches wide with length unrestricted.

(i) Wall opening barriers (rails, rollers, picket fences, and half doors) must be capable of withstanding a load of at least 200 pounds applied in any direction (except upward) on the top rail or corresponding member.

(j) Wall opening grab handles must be not less than 12 inches long and mounted to give approximately 3 inches clearance from the side framing of the wall opening. The size, material, and anchoring of the grab handle must be such that it can withstand a load of at least 200 pounds applied in any direction.

(k) Wall opening screens must be able to withstand a load of at least 200 pounds applied horizontally on the near side of the screen. They may be solid, grillwork with openings not more than 8 inches long, or slatwork with openings not more than 4 inches wide with length unrestricted.

Stat. Auth.: ORS 654.025(2) and 656.726(4).
Stats. Implemented: ORS 654.001 through 654.295.
Hist: OR-OSHA Admin. Order 4-1998, f/8/28/98, ef. 10/1/98.

437-004-0330 Fixed Industrial Stairs.

(1) Definitions. Unless otherwise stated, fixed industrial stair terms mean:

Handrail. A single bar or pipe supported on brackets from a wall or partition, and used as a handhold for persons on stairs or ramps.

Nose, nosing. That part of a tread projecting beyond the face of the riser.

Open riser. The space between the treads of stairways without upright parts (risers).

Platform. An extended step or landing breaking a continuous run of stairs.

Railing. A vertical barrier along exposed sides of stairs and platforms to prevent people from falling. The top rail usually serves as a handrail.

Rise. The vertical distance from the top of a tread to the top of the next higher tread.

Riser. The upright part of a step at the back of a lower tread and near the leading edge of the next higher tread.

Stairs, stairway. A set of steps with three or more risers, from one level or floor to another, or leading to platforms, pits or around machinery, tanks, and other equipment.

Tread. The horizontal part of a step.

Tread run. The horizontal distance from the leading edge of a tread to the leading edge of an adjacent tread.

Tread width. The horizontal distance from front to back of tread including nosing.

(2) Application. This section has specifications for the safe design and construction of fixed stairs. This includes interior and exterior stairs around machinery, tanks, and other equipment, and stairs leading to or from floors, platforms, or pits. This section does not apply to stairs used for fire exits, private residences or articulated stairs, the angle of which changes with the rise and fall of the base support.

(3) Where fixed stairs are required. There must be fixed stairs where work requires regular travel between floors or levels, and access to operating platforms at any equipment that requires frequent attention. There also must be fixed stairs for daily access to elevations or for access at each shift for such purposes as inspection, regular maintenance, etc. There must be fixed stairs where work may expose employees to acids, caustics, gases, or other harmful substances, or where employees normally must carry tools or equipment by hand. (It is not the intent of this section to preclude using fixed ladders for access to elevated tanks, towers, and similar structures, etc., where their use is common practice.) Spiral stairs are not legal except for special limited use and secondary access situations where it is not practical to provide a conventional stairway. Winding stairs are acceptable on tanks and similar round structures where the diameter of the structure is at least 5 feet.

(4) Stair strength. Fixed stairs must be able to carry a load of five times the normal live load anticipated but never less than a moving concentrated load of 1,000 pounds.

(5) Stair width. Fixed stairs must be at least 22 inches wide.

(6) Angle of stairway rise. Fixed stairs must be at angles to the horizontal of between 30 degrees and 50 degrees. Use any uniform combination of rise/tread dimensions that will result in stairs at an angle to the horizontal between 30 degrees and 50 degrees. Table 1 gives rise/tread dimensions that will produce stairs within this range. However, other allowable rise/tread combinations are possible.

Table 1

Angle to horizontal	Rise (in inches)	Tread run (in inches)
30°35'	6 1/2	11
32°08'	6 3/4	10 3/4
33°41'	7	10 1/2
35°16'	7 1/4	10 1/4
36°52'	7 1/2	10
38°29'	7 3/4	9 3/4
40°08'	8	9 1/2
41°44'	8 1/4	9 1/4
43°22'	8 1/2	9
45°00'	8 3/4	8 3/4
46°38'	9	8 1/2
48°16'	9 1/4	8 1/4
49°54'	9 1/2	8

(7) Stair treads. All treads must be slip-resistant and the nosings must be a nonslip finish. Welded bar grating treads without nosings are acceptable if the leading edge can be readily identified by people descending the stairs and if the tread is serrated or is of nonslip design. Rise height and tread width must be uniform throughout any flight of stairs including any foundation structure used as one or more treads of the stairs.

(a) Treads must not be loose. Replace or repair defective treads quickly.

(8) Stairway platforms. Stairway platforms must be no less than the width of the stairway and a minimum of 30 inches long measured in the direction of travel.

(9) Railings and handrails. There must be standard railings on the open sides of exposed stairs and stair platforms. There must be handrails on at least one side of closed stairs preferably on the right side going down. Stair railings and handrails must comply with OAR 437-004-0320.

(10) Vertical clearance. Vertical clearance above any stair tread to an overhead obstruction must be at least 6 1/2 feet measured from the leading edge of the tread.

Stat. Auth.: ORS 654.025(2) and 656.726(4).
Stats. Implemented: ORS 654.001 through 654.295.
Hist: OR-OSHA Admin. Order 4-1998, f/8/28/98, ef. 10/1/98.

437-004-0340 Portable Ladders.

(1) Definitions. Portable ladder terms mean:

Check. A lengthwise separation of the wood, most of which occurs across the rings of annual growth.

Compression failure. A deformation (buckling) of the fibers due to excessive compression along the grain.

Decay. Disintegration of wood substance due to action of wood-destroying fungi. It is also known as dote and rot.

Extension ladder. A nonself-supporting portable ladder of adjustable length. It has two or more sections that adjust to varied lengths.

Extension trestle ladder. An adjustable, self-supporting portable ladder made of a trestle ladder base and a vertical extension section.

Ladder. A device with steps, rungs or cleats between rails, for people to climb up or down.

Low density wood. Exceptionally light in weight and usually deficient in strength for the species.

Platform ladder. A fixed length, self-supporting portable ladder with a platform at the highest permissible standing level.

Platform. A landing surface for working or standing.

Reinforced plastic. A plastic made stronger than its base by the addition of high strength fillers, usually fibers, fabrics or mats.

Section.

Bottom or base section. The lowest section of a nonself-supporting portable ladder.

Middle or intermediate section. The section(s) between the top (fly) and bottom (base) sections of a nonself-supporting portable ladder.

Top or fly section. The uppermost section of a nonself-supporting portable ladder.

Sectional ladder. A nonself-supporting, fixed length, portable ladder, with two or more sections of ladder that may combine to work as a single ladder. Its size is the length of the assembled sections.

Shake. A separation along the grain, most of which occurs between the rings of annual growth.

Single section ladder. A fixed length, nonself-supporting portable ladder made of one section.

Stepladder. A fixed length, self-supporting portable ladder with a hinged back.

Top cap. The very top part of a stepladder.

Top step. The first step below the top cap of a stepladder. If the ladder has no top cap, the top step is the first one below the top of the rails.

Trestle ladder. A fixed length, self-supporting portable ladder made of two sections and hinged at the top. It can be climbed by two people at once, one per side.

Wane. Bark, or the lack of wood from any cause, on the corner of a piece.

Wood irregularities. Natural characteristics in or on wood that may lower its durability, strength, or utility.

Working Load Rating. The maximum load authorized by the manufacturer for the ladder.

(2) Application. This standard covers the selection, use and care of portable ladders used in agriculture. It does not cover orchard ladders, special ladders, combination step and extension ladders, aisle way stepladders, and shelf ladders.

(3) Ladder selection. Portable reinforced plastic (fiberglass) ladders must comply with American National Standard A14.5-1992. Wood ladders must comply with American National Standard A14.1-1994. Metal ladders must comply with American National Standard A14.2-1990.

Unaltered and properly maintained ladders that meet the ANSI standard in effect at the time of their manufacture comply with this standard as do ladders that comply with newer versions of the particular ANSI standard.

(4) Condition of wood ladders. There must be no sharp edges or splinters on wood parts. Visual inspection must show no check, shake, wane, compression failures, decay, or other wood irregularities. Ladders may not be made of low density wood.

(5) General requirements – all ladders.

(a) Step spacing must be uniform and not more than 12 inches. Steps must be parallel and level when the ladder is in the normal use position.

(b) All joints, attachments and working parts of ladders must be tight and not worn to a point that causes a hazard. Do not use ladders with damaged or bent parts.

(c) Replace frayed or badly worn rope.

(d) Safety feet and other auxiliary equipment must in good condition.

(e) Inspect ladders and remove from use any with defects. Ladders awaiting repair must be tagged, "Dangerous, Do Not Use."

(f) There can be no dents, breaks or bends in the side rails or rungs;

(g) Do not make ladders by fastening cleats across a single rail.

(h) Portable ladders must have nonslip bases.

(6) General requirements – portable stepladders.

(a) The minimum width between side rails at the top, inside to inside, must be not less than 11 1/2 inches. From top to bottom, the side rails must spread at least 1-inch for each foot of length of the stepladder.

(b) The bottoms of the four rails must have insulating nonslip material.

(c) There must be a metal spreader or locking device strong enough to hold the ladder open. The spreader must have no sharp points or edges. For Type III ladders, the pail shelf and spreader can be one unit (a shelf-lock ladder).

(7) Use – all ladders. Use ladders only for purposes approved or recommended by the manufacturer.

(a) Do not load ladders beyond their working load rating. Do not allow more than one person at a time on ladders not intended by the manufacturer to hold more than one person.

(b) Do not use ladders in front of doors that open toward the ladder without blocking, locking or guarding the door.

(c) Do not use ladders placed on boxes, barrels, or other unstable bases to obtain additional height.

(d) Do not use ladders with broken or missing steps, rungs, or cleats, broken side rails, or other faulty parts.

(e) Do not splice sections of short ladders together to make a long one.

(f) When used, metal reinforcers must be on the underside of rails of portable rung ladders.

(g) A ladder for access to a roof must extend at least 3 feet above the top support point, at the eave, gutter, or roof line.

(h) Secure ladders as necessary when used on surfaces that may allow slipping or movement. Use one of the following methods:

(A) non-slip bases on the ladder feet; or,

(B) steel points or safety shoes on the ladder feet, designed for the type of surface the ladder is on; or

(C) nail the ladder to the floor, or set it against secured blocks or chocks.

NOTE: Non-slip bases are not a substitute for care in safely placing, lashing, or holding a ladder on oily, metal, concrete, or slippery surfaces.

(i) Use portable ladders only on a surface that gives stable, level footing.

(j) The climber must face the ladder and have free use of both hands when climbing up or down.

(k) Do not step or jump between erected ladders.

(l) There must be only one person at a time on a ladder unless its labeling specifically allows use by more than one person.

(m) Do not use ladders as planks or bridges between walking surfaces or in other horizontal applications.

(n) Do not use ladders to gain additional height from elevated surfaces like scaffolds, truck beds, vehicle bodies, tractor scoops or boom truck buckets.

(o) Do not use metal ladders or wood ladders with vertical metal parts for electrical work or where they may contact electric conductors. This type ladder must have markings reading “WARNING – do not use around energized electrical equipment” or words of equal meaning.

(8) Use of specific types of ladders.

(a) Portable stepladders. Do not use stepladders more than 20 feet long.

(A) Do not climb on the back section of the ladder unless it has steps meant for climbing. Do not stand on the top step or top cap of stepladders.

(B) There must be only one person at a time on the ladder.

(C) Do not use stepladders in freestanding positions when not fully opened. Do not use them as supports for working platforms or scaffolding planks.

(b) Portable rung ladders.

(A) Single ladder.

(i) Do not use single ladders more than 30 feet long.

(ii) Place these ladders at an angle shown in Figure 1.

(iii) The tops must be tied down or secured if there is a possibility of sliding or movement.

(iv) Single ladders are acceptable as fixed ladders only when they comply with 437-004-0360.

(B) Two-section ladder.

(i) Do not use two-section extension ladders more than 60 feet long. All ladders of this type must have two sections, one to fit within the side rails of the other, and arranged so that the upper section will raise and lower.

(ii) Set up and use extension ladders so that the top section or fly is resting on the bottom section or base. Rung locks must be in the proper position.

(iii) Place these ladders at an angle shown in Figure 1.

(iv) The tops must be tied down or secured if there is a possibility of sliding or movement.

(v) On two-section extension ladders the minimum overlap for the two sections in use must be as follows:

Size of Ladder (feet)	Overlap (feet)
Up to and including 36	3
Over 36 up to and including 48	4
Over 48 up to and including 80	5

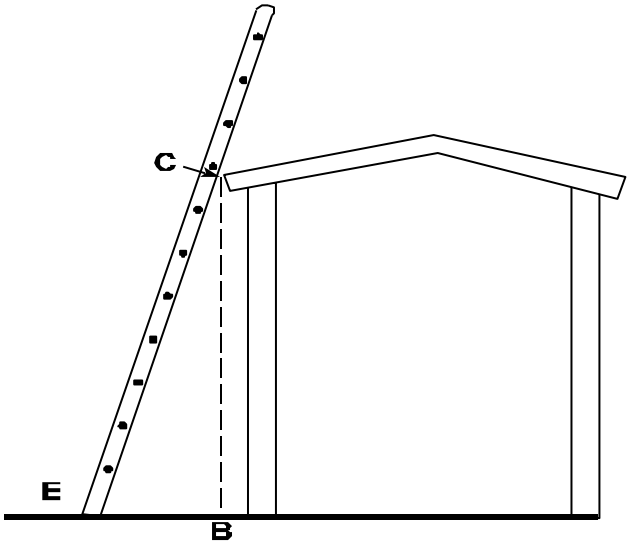

C is the top support
E is the foot of the ladder
EB = 1/4 EC

Figure 1. Diagram of proper ladder pitch

(C) Sectional ladder.

(i) Do not use assembled combinations of sectional ladders longer than lengths allowed in this subdivision.

(ii) Place these ladders at an angle shown in Figure 1.

(iii) The tops must be tied down or secured if there is a possibility of sliding or movement.

(iv) Do not use three section extension ladders longer than 72 feet.

(D) Trestle and extension trestle ladder. Do not use trestle ladders, or extension sections or base sections of extension trestle ladders more than 20 feet long.

Stat. Auth.: ORS 654.025(2) and 656.726(4).
Stats. Implemented: ORS 654.001 through 654.295.
Hist: OR-OSHA Admin. Order 4-1998, f/8/28/98, ef. 10/1/98.
OR-OSHA Admin. Order 9-2006, f. 9/22/06, ef. 9/22/06.

437-004-0350 Orchard Ladders.

Definition.

Orchard Ladder. A self-supporting portable tripod ladder of fixed length. It has two front side rails and a single back support leg.

(1) Application. This covers the maintenance, use and care of orchard ladders.

(2) Maintenance.

(a) Each step of wooden orchard ladders must have these reinforcements:

(A) A steel rod not less than 0.160-inch in diameter, that passes through metal washers big enough to prevent pressing into the side rails, and through a truss block between the rod and the center of each step, or;

(B) A metal angle brace on each end firmly secured to the steps and side rails, or;

(C) Construction of equivalent strength and safety.

(b) If the ladder has rod reinforcement, the bottom step must also have a metal angle brace on each end securely attached to the bottom step and side rails.

(c) All steps 27 inches or longer must have a metal angle brace at each end securely attached to the step and rail.

(d) The minimum width between side rails at the highest step for standing, inside to inside, is 9 1/2 inches. From top to bottom the side rails must spread at least an average of 2 1/2 inches for each foot of ladder length.

(e) All orchard ladders must have a top with tightly secured wood or metal brackets or fittings, side rails and back leg. The back leg must swing freely without excessive play or wear at the joints.

(f) There must be no dents, breaks or bends in the side rails or rungs.

(3) Training.

(a) Prior to assigning an employee to work with orchard ladders, the employer must assure that they have the necessary skills and knowledge to use the ladder safely, or;

(b) The employer must train new employees about the requirements of this standard and the special procedures and cautions associated with using an orchard ladder.

(4) Use and care.

(a) Do not use orchard ladders longer than 16 feet.

(b) Do not use the top as a step.

(c) Do not allow more than one person at a time on ladders.

(d) Do not step or jump between two or more erected ladders.

(e) Do not use ladders to gain additional height from already elevated surfaces like scaffolds, truck beds, vehicle bodies, tractor scoops or boom truck buckets.

(f) Inspect ladders before each use. Do not use any with defects, loose, warped, bent or broken parts. Tag these ladders, "Dangerous, Do Not Use" until they are fixed.

(g) Do not use metal ladders or wood ladders with vertical metal parts for electrical work or where they may contact electric conductors. This type ladder must have markings reading "WARNING – do not use around energized electrical equipment" or words of equal meaning.

Stat. Auth.: ORS 654.025(2) and 656.726(4).
Stats. Implemented: ORS 654.001 through 654.295.
Hist: OR-OSHA Admin. Order 4-1998, f/8/28/98, ef. 10/1/98.

437-004-0360 Fixed Ladders.

(1) Definitions. Fixed ladder terms mean:

Cage. A guard sometimes referred to as a basket guard that is an enclosure fastened to the side rails of a fixed ladder or to a structure to encircle the climbing space of the ladder.

Cleats. Ladder cross-pieces of rectangular cross-section placed on edge on which a person may step when climbing up or down.

Fastenings. A device to attach a ladder to a structure, building, or equipment.

Fixed ladder. A ladder permanently attached to a structure, building, or equipment.

Grab bars. Individual handholds adjacent to or as an extension above ladders to provide access beyond the limits of the ladder.

Individual-rung ladder. A fixed ladder with each rung individually attached to a structure, building, or equipment.

Ladder. A device with steps, rungs or cleats between rails, for people to climb up or down.

Ladder safety device. Any device, other than a cage or well, designed to eliminate or reduce the possibility of accidental falls, that may use life belts, friction brakes, and sliding attachments.

Pitch. The included angle between the horizontal and the ladder, measured on the opposite side of the ladder from the climbing side.

Rail ladder. A fixed ladder with side rails joined at regular intervals by rungs or cleats and fastened in full length or in sections to a building, structure, or equipment.

Rungs. Ladder cross-pieces of circular or oval cross-section on which a person may step when climbing up or down.

Side-step ladder. One from which a person getting off at the top must step sideways to reach the landing.

Steps. The flat cross-pieces of a ladder on which a person may step when climbing up or down.

Through ladder. A ladder from which a person getting off at the top must step through side rails to reach the landing.

Well. A permanent complete enclosure around a fixed ladder, that is attached to the walls of the well. Proper clearances for a well will give the climber the same protection as a cage.

(2) Design requirements.

(a) Design considerations. All ladders, appurtenances, and fastenings must meet these load requirements:

(A) The minimum design live load must be a single concentrated load of 200 pounds.

(B) Design consideration must include the number and position of additional concentrated live load units of 200 pounds each as determined from anticipated use.

(C) Consider the live loads caused by persons on the ladder to be concentrated at such points as will cause the maximum stress in the structural member being under evaluation.

(D) Use the weight of the ladder and attachments together with the live load when designing rails and fastenings.

(E) All wood parts of fixed ladders must meet the requirements of OAR 437-004-0340(3).

(F) For fixed ladders with wood side rails and wood rungs or cleats, used at an angle between 75 degrees and 90 degrees, and intended for use by no more than one person per section, single ladders in OAR 437-004-0340(8)(b)(A) are acceptable.

(3) Specific features.

(a) Rungs and cleats.

(A) All rungs must have a minimum diameter of 3/4-inch for metal ladders, except as in paragraph **OAR 437-004-0360(3)(g)** and a minimum diameter of 1 1/8 inches for wood ladders.

(B) The distance between rungs, cleats, and steps must be uniform and not more than 12 inches.

(C) The minimum clear length of rungs or cleats must be 16 inches.

(D) Rungs, cleats, and steps must not have splinters, sharp edges, burrs, or projections.

(E) The rungs of an individual rung ladder must not allow the climber's foot to slide off the end. Figure 2 shows a suggested design.

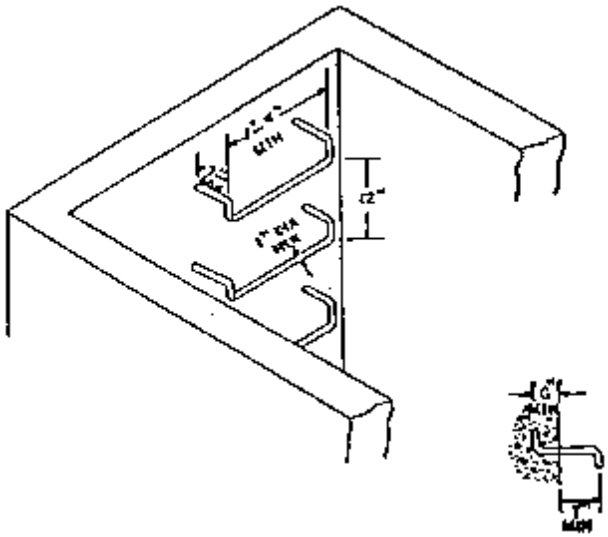

Figure 2. - Suggested design for rungs on individual-rung ladders.

(b) Side rails. Side rails that might be used as a climbing aid must be of such cross sections as to afford adequate gripping surface without sharp edges, splinters, or burrs.

(c) Fastenings. Fastenings must be an integral part of fixed ladder design.

(d) Splices. All splices must meet design requirements noted in **(2)(a)** above. All splices and connections must have smooth transition with original members and no sharp or extensive projections.

(e) Electrolytic action. Protect dissimilar metals from electrolytic action when they are joined.

(f) Welding. All welding must be according to the "Code for Welding in Building Construction" (AWSD1.0-1966).

(g) Protection from deterioration. Paint or treat metal ladders and attachments to resist corrosion and rusting when necessary. Ladders with individual metal rungs imbedded in concrete, that serve as access to pits and to other areas under floors, must have rungs with a minimum diameter of 1-inch or paint or treatment to resist corrosion and rusting.

(4) Clearance.

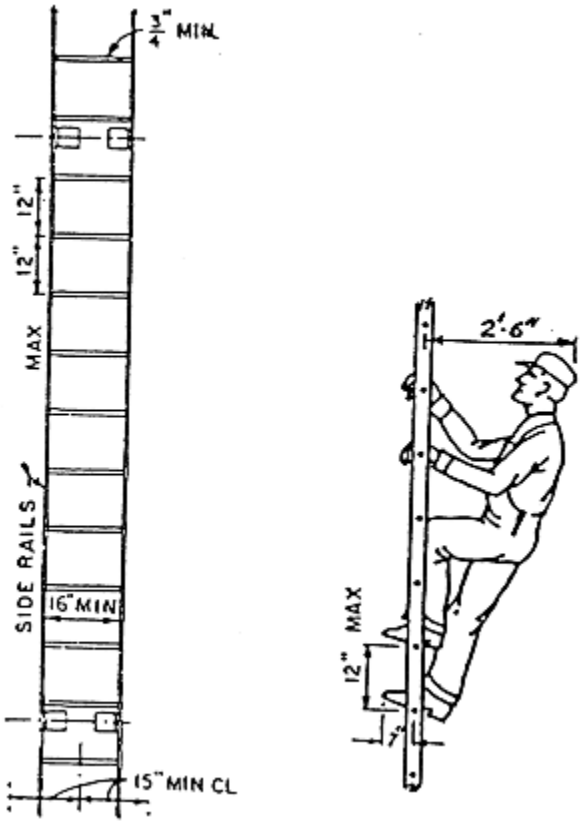

Figure 3. - Rail Ladder With Bar Steel Rails and Round Steel Rungs

(a) Climbing side. On fixed ladders, the perpendicular distance from the centerline of the rungs to the nearest permanent object on the climbing side of the ladder must be 36 inches for a pitch of 76 degrees, and 30 inches for a pitch of 90 degrees (Figure 3), with minimum clearances for intermediate pitches varying between these two limits in proportion to the slope, except as in **(4)(c)** and **(e)** below.

(b) Ladders without cages or wells. There must be a clear width of at least 15 inches each way from the centerline of the ladder in the climbing space, except when cages or wells are necessary.

(c) Ladders with cages or baskets. Subparagraphs **(4)(a)** and **(b)** above do not cover ladders with a cage or basket. They must conform to **(5)(a)(E)**. Subparagraph **(4)(a)** above does not cover fixed ladders in smooth-walled wells. They must conform to **(5)(a)(F)**.

(d) Clearance in back of ladder. The distance from the centerline of rungs, cleats, or steps to the nearest permanent object in back of the ladder must be not less than 7 inches, except that when there are unavoidable obstructions, there must be minimum clearances shown in Figure 4.

Minimum Ladder Clearances

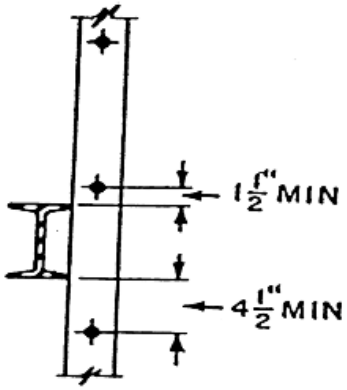

Figure 4. - Clearance for Unavoidable Obstruction at Rear of Fixed Ladder

(e) Clearance in back of grab bar. The distance from the centerline of the grab bar to the nearest permanent object in back of the grab bars must be not less than 4 inches. Grab bars must not protrude on the climbing side beyond the rungs of the ladder that they serve.

(f) Step-across distance. The step-across distance from the nearest edge of the ladder to the nearest edge of equipment or structure must be not more than 12 inches, or less than 2 1/2 inches (Figure 5).

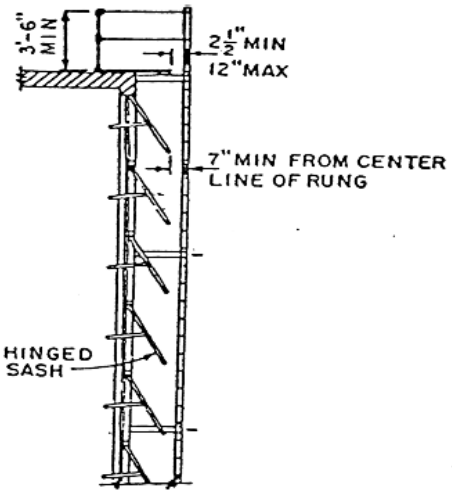

Figure 5. - Ladder Far from Wall

(g) Hatch cover. Counterweighted hatch covers must open a minimum of 60 degrees from the horizontal. The distance from the centerline of rungs or cleats to the edge of the hatch opening on the climbing side must be not less than 24 inches for offset wells or 30 inches for straight wells. There must be no protruding potential hazards within 24 inches of the centerline of rungs or cleats; any such hazards within 30 inches of the centerline of the rungs or cleats must have deflector plates at an angle of 60 degrees from the horizontal as shown in Figure 6. The relationship of a fixed ladder to an acceptable counterweighted hatch cover is shown in Figure 7.

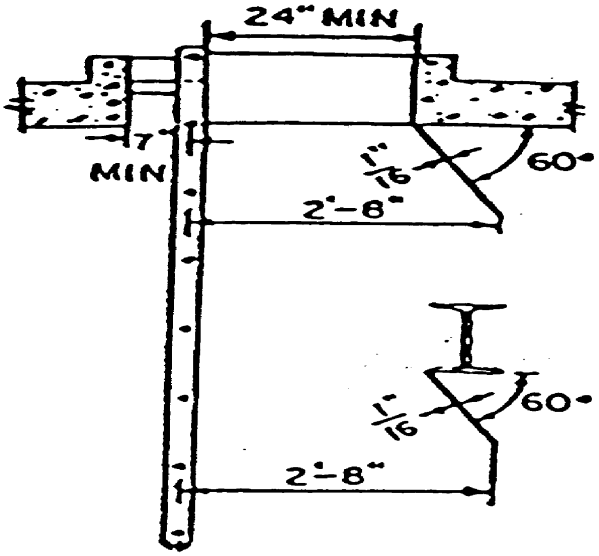

Figure 6. - Deflector Plates for Head Hazards

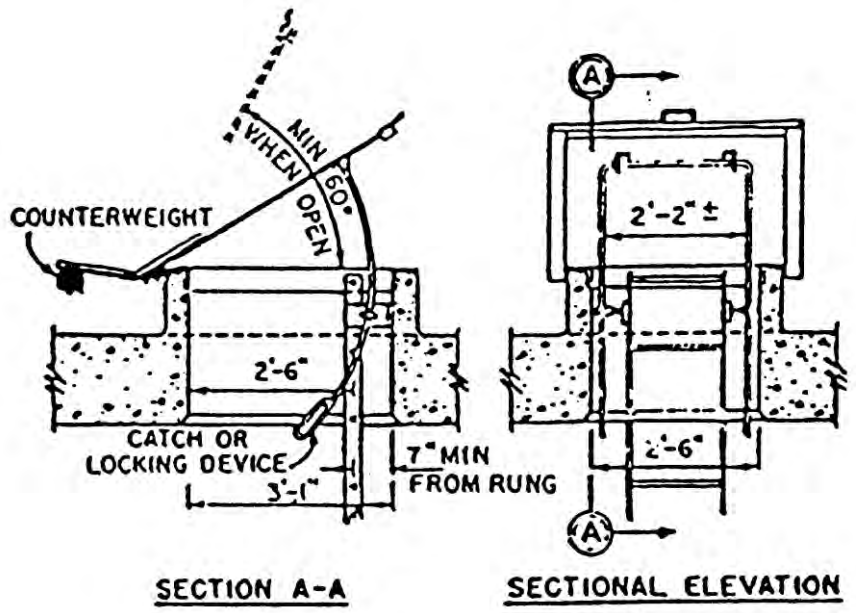

Figure 7. – Relationship of Fixed Ladder to a Safe Access Hatch

(5) Special requirements.

(a) Cages, Wells and Ladder Climbing Safety Systems.

(A) Cages, wells or ladder climbing safety systems must be on all ladders where the length of climb is more than 24 feet but not more than 50 feet or the top of the ladder is more than 24 feet above the ground or nearest lower landing surface.

NOTE: Design specifications for cages and wells are in Figures 8, 9 and 10.

(B) Ladders with a length of climb more than 50 feet must have a cage, well or climbing safety system and must meet one of the following two requirements:

(i) When using a cage or well the ladder must be in sections, horizontally offset, with rest platforms at least every 50 feet.

(ii) When using a ladder climbing safety system the ladder must have rest platforms at least every 150 feet (except chimneys).

Figure 8. - Clearance Diagram for Fixed Ladder in Well

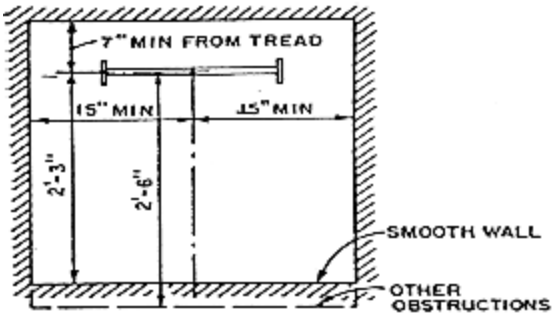

(C) Cages must extend at least 42 inches above the top of the landing, unless there is other acceptable protection.

(D) Cages must extend down the ladder to a point not less than 7 feet nor more than 8 feet above the base of the ladder. The bottom must flare not less than 4 inches or the portion of the cage opposite the ladder must extend to the base.

(E) Cages must not extend less than 27 nor more than 28 inches from the center line of the rungs of the ladder. Cages must not be less than 27 inches in width. The inside must be clear of projections. Vertical bars must be at a maximum spacing of 40 degrees around the circumference of the cage; this will give a maximum spacing of approximately 9 1/2 inches, center to center.

(F) Ladder wells must have a clear width of at least 15 inches measured each way from the center line of the ladder. Smooth-walled wells must be a minimum of 27 inches from the center line of rungs to the well wall on the climbing side of the ladder. Where other obstructions on the climbing side of the ladder exist, there must be a minimum of 30 inches from the centerline of the rungs.

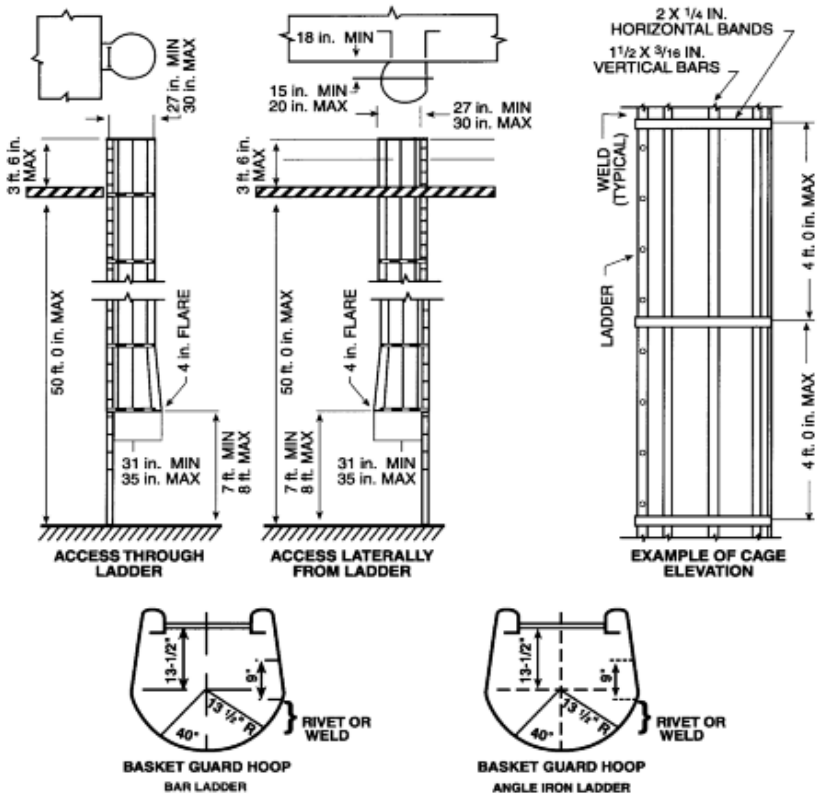

Figure 9. – Cages for Ladders More Than 24 Feet High

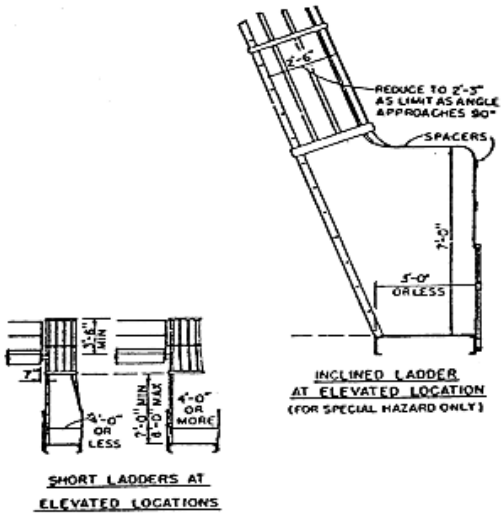

Figure 10. – Cages – Special Applications

(b) Landing platforms.

(A) Where a person has to step a distance more than 12 inches from the center line of the rung of a ladder to the nearest edge of a structure or equipment, there must be a landing platform. The minimum step-across distance is 2 1/2 inches.

(B) All landings must have standard railings and toeboards, that give safe access to the ladder. Platforms must be not less than 24 inches wide and 30 inches long.

(C) One rung of any section of ladder must be at the level of the landing laterally served by the ladder. Where access to the landing is through the ladder, the spacing from the landing platform to the first rung below the landing must be the same as the rung spacing on the ladder.

(c) Ladder extensions. The side rails of through or side stepladder extensions must extend 3 1/2 feet above parapets and landings. For through ladder extensions, omit the rungs from the extension. There must be not less than 18 nor more than 24 inches clearance between rails. For side step or offset fixed ladder sections, at landings, the side rails and rungs must extend to the next regular rung beyond or above the 3 1/2-foot minimum (Figure 11).

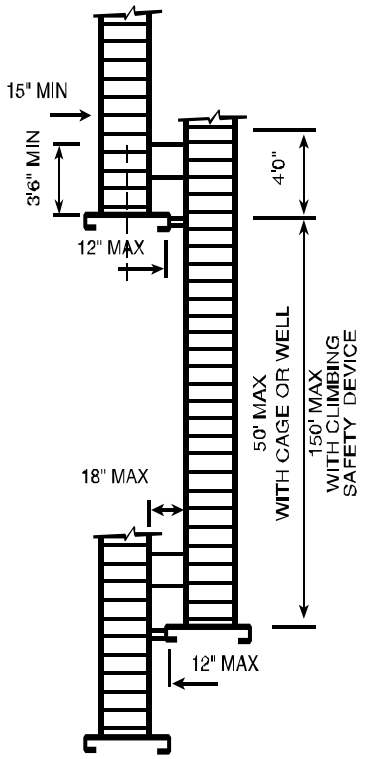

Figure 11. – Offset Fixed Ladder Sections

(d) Grab bars. Space grab bars by a continuation of the rung spacing when they are horizontal. Vertical grab bars must have the same spacing as the ladder side rails. Grab bar diameters must be the equivalent of the round rung diameters.

(6) Pitch.

(a) Preferred pitch. The preferred pitch of fixed ladders is between 75 degrees and 90 degrees with the horizontal (Figure 12).

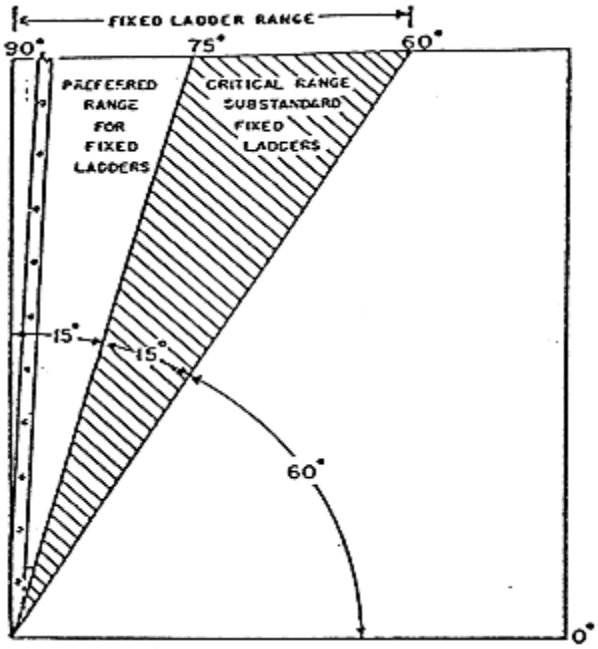

Figure 12. - Pitch of Fixed Ladders

(b) Substandard pitch. Fixed ladders are substandard if they are between 60 degrees and 75 degrees with the horizontal. Substandard fixed ladders are allowed only where necessary to meet conditions of installation.

(c) Scope of coverage in this section. This section covers only fixed ladders between 60 degrees and 90 degrees with the horizontal.

(d) Pitch more than 90 degrees. No ladder may be more than 90 degrees with the horizontal.

(7) Maintenance. All ladders must be in safe condition. Inspect ladders at intervals determined by use and exposure.

Stat. Auth.: ORS 654.025(2) and 656.726(4).
Stats. Implemented: ORS 654.001 through 654.295.
Hist: OR-OSHA Admin. Order 4-1998, f/8/28/98, ef. 10/1/98.

437-004-0370 Scaffolding.

(1) Scope. This section has safety requirements for scaffolds.

(2) Definitions. Scaffolding terms mean:

Bearer. A horizontal part of a scaffold on which the platform rests and which may use ledgers as support.

Boatswain's chair. A seat supported by slings attached to a suspended rope, designed to accommodate one worker in a sitting position.

Brace. A tie that holds one scaffold part in a fixed position with respect to another.

Crawling board or chicken ladder. A plank with cleats spaced and secured at equal intervals, for use on roofs, not designed to carry any material.

Double pole or independent pole scaffold. A scaffold supported from the base by a double row of uprights, independent of support from the walls and constructed of uprights, ledgers, horizontal platform bearers, and diagonal bracing.

Guardrail. A rail secured to uprights that run along the exposed sides and ends of platforms.

Heavy duty scaffold. A scaffold built to carry a working load of not more than 75 pounds per square foot.

Horse scaffold. A scaffold for light or medium duty, made of horses supporting a work platform.

Ladder jack scaffold. A light duty scaffold supported by brackets attached to ladders.

Ledger (stringer). A horizontal scaffold member that extends from post to post and supports the putlogs or bearer forming a tie between the posts.

Light duty scaffold. A scaffold built to carry a working load not more than 25 pounds per square foot.

Manually propelled mobile scaffold. A portable rolling scaffold mounted on casters.

Maximum intended load. The total of all loads including the working load, the weight of the scaffold, and such other loads as may be reasonably anticipated.

Medium duty scaffold. A scaffold built to carry a working load not more than 50 pounds per square foot.

Midrail. A rail approximately midway between the guardrail and platform and secured to the uprights along the exposed sides and ends of platforms.

Putlog. A scaffold part on which the platform rests.

Roofing bracket. A bracket used in sloped roof construction. It has a way for fastening to the roof or is supported by ropes fastened over the ridge and secured to some suitable object.

Runner. The lengthwise horizontal bracing or bearing parts or both.

Scaffold. Any temporary elevated platform and its supporting structure used for supporting workers or materials or both.

Single pole scaffold. Platforms resting on putlogs or crossbeams, the outside ends of which are on ledgers secured to a single row of posts or uprights and the inner ends of which are on or in a wall.

Toeboard. A barrier secured along the sides and ends of a platform, to keep material from falling.

Tubular welded frame scaffold. A sectional, panel, or frame metal scaffold made of prefabricated welded sections, that has posts and bearers with intermediate connecting members, braced with diagonal or cross braces.

Working load. Load imposed by workers, material and equipment.

(3) General requirements for all scaffolds.

(a) The footing or anchorage for scaffolds must be sound, rigid, and able to carry the maximum intended load without settling or displacement. Do not use unstable objects such as barrels, boxes, loose brick, or concrete blocks to support scaffolds or planks.

(b) Scaffolds and their components must be able to support at least four times the maximum intended load.

(c) Scaffolds and other devices mentioned here must be in safe condition. Do not alter or move an occupied stationary scaffold.

(d) Remove from use any damaged or weakened scaffold until repairs are done.

(e) Do not overload scaffolds. Follow manufacturers' instructions.

(f) Loaded planks or platforms must not deflect more than 1/60th of the span (2 inches in 10 feet).

(g) Nails or bolts used to make scaffolds must be strong enough and in sufficient numbers at each connection to assure the designed strength of the scaffold. Do not subject nails to a straight pull. Drive all nails completely.

(h) Overlap all planking or platforms (minimum 12 inches) or secure them from movement.

(i) There must be a ladder or equivalent safe access.

(j) Scaffold planks must extend over their end supports not less than 6 inches nor more than 18 inches.

(k) The poles, legs, or uprights of scaffolds must be plumb, and securely and rigidly braced to prevent swaying and displacement.

(l) Use a tag line when hoisting materials onto a scaffold.

(m) There must be overhead protection for employees exposed to overhead hazards.

(n) If persons work or pass under the scaffolds there must be a screen between the toeboard and the guardrail, along the entire opening. The screen must be No. 18 gauge U.S. Standard Wire 1/2-inch mesh or the equivalent.

(o) Employees must not work on scaffolds during storms or high winds.

(p) Employees must not work on scaffolds covered with ice or snow or that have slippery surfaces.

(q) Accumulations of tools, materials, and debris must not cause a hazard.

(r) Wire or fiber rope for scaffold suspension must be able to support at least six times the intended load.

(s) Do not use shore scaffolds or lean-to scaffolds.

(t) Lumber sizes, used here, refer to nominal sizes except where otherwise stated.

(u) Use anchor bolts, reveal bolts, or other equivalent means to secure scaffolds to permanent structures. Do not use window cleaners' anchor bolts.

(v) Take special precautions to protect scaffold members, including any wire or fiber ropes, when using a heat-producing process.

(4) General requirements for wood pole scaffolds.

(a) Scaffold poles must be plumb and on a foundation that prevents settling.

(b) Where wood poles are spliced, the ends must be square and the upper section must rest squarely on the lower section. There must be wood splice plates, at least 4 feet long, on at least two adjacent sides and overlapping the abutted ends equally. These plates must be the same width as the pole. Splice plates of other materials of equivalent strength are acceptable.

(c) Set independent pole scaffolds as near to the wall of the building as practicable.

(d) Guy or tie pole scaffolds to the building or structure. If they are more than 25 feet high or long, secure them at intervals not more than 25 feet vertically and horizontally.

(e) Set putlogs or bearers with their greater dimensions vertical, long enough to project over the ledgers of the inner and outer rows of poles at least 3 inches for proper support.

(f) Reinforce every wooden putlog on single pole scaffolds with a 3/16 x 2-inch steel strip or equivalent secured to its lower edge throughout its length.

(g) Ledgers must be long enough to extend over two pole spaces. Do not splice ledgers between the poles. Reinforce ledgers with bearing blocks securely nailed to the side of the pole to form a support for the ledger.

(h) Use diagonal bracing to prevent the poles from moving in a direction parallel with the wall of the building, or from buckling.

(i) Use cross bracing between the inner and outer sets of poles in independent pole scaffolds. Cross brace the free ends of pole scaffolds.

(j) There must be full diagonal face bracing across the entire face of pole scaffolds in both directions. Splice the braces at the poles.

(k) Lay platform planks with their edges close together so the platform will be tight with no spaces through which tools or material can fall.

(l) When lapped, each plank must lap its end supports at least 12 inches. Where the ends of planks abut each other to form a flush floor, the butt joint must be at the centerline of a pole. Rest abutted ends on separate bearers. Use intermediate beams where necessary to prevent dislodgment of planks due to deflection. Nail or cleat the ends to prevent their dislodgment.

(m) When a scaffold turns a corner, lay the platform planks to prevent tipping. The planks that meet the corner putlog at an angle must be laid first, extending over the diagonally placed putlog far enough to have a safe bearing, but not far enough to involve any danger from tipping. The planking running in the opposite direction at right angles must be laid to extend over and rest on the first layer of planking.

(n) When moving platforms to the next level, leave the old platform undisturbed until the new putlogs or bearers are in place.

(o) Install guardrails, 2 x 4 inches or the equivalent, between 36 inches and 42 inches high at all open sides on all scaffolds more than 10 feet above the ground or floor. The midrail, when required, must be 1 x 4-inch lumber or equivalent, and there must be toeboards at least 4 inches high. Use wire mesh according to paragraph **OAR 437-004-0370(3)(n)**.

(p) All wood pole scaffolds 60 feet or less in height must be built according to tables 1 through 6. If they are more than 60 feet high, a registered professional engineer must design them. A copy of the typical drawings and specifications must be available to the employer and for inspection purposes.

Table 1 – Minimum Nominal Size and Maximum Spacing of Members of Single Pole Scaffolds – Light Duty

	Maximum height of scaffold	
	20 feet	**60 feet**
Uniformly distributed load	Not to exceed 25 pounds per square foot.	
Poles or uprights	2 by 4 in	4 by 4 in.
Poles spacing (longitudinal)	6 ft. 0 in	10 ft. 0 in.
Maximum width of scaffold	5 ft. 0 in	5 ft. 0 in.
Bearers or putlogs to 3 ft. 0 in width	2 by 4 in	2 by 4 in.
Bearers or putlogs to 5 ft. 0 in width	2 by 6 in. or 3 by 4 in	2 by 6 in. or 3 by 4 in. (rough)
Ledgers	1 by 4 in	1 1/4 by 9 in.
Planking	1 1/4 by 9 in (rough)	2 by 9 in.
Vertical spacing of horizontal members	7 ft. 0 in.	7 ft. 0 in.
Bracing, horizontal and diagonal	1 by 4 in	1 by 4 in.
Tie-ins	1 by 4 in	1 by 4 in.
Toeboards	4 in high (minimum)	4 in. high (minimum)
Guardrail	2 by 4 in	2 by 4 in.

Use all members on their edge, except planking.

Table 2 – Minimum Nominal Size and Maximum Spacing of Members of Single Pole Scaffolds – Medium Duty

Uniformly distributed load	Not more than 50 pounds per square foot.
Maximum height of scaffold	60 ft.
Poles or uprights	4 by 4 in.
Pole spacing (longitudinal)	8 ft. 0 in.
Maximum width of scaffold	5 ft. 0 in.
Bearers or putlogs	2 by 9 in. or 3 by 4 in.
Spacing of bearings or putlogs	6 ft. 0 in.
Ledgers	2 by 9 in.
Vertical spacing of horizontal members	9 ft. 0 in.
Bracing, horizontal	1 by 6 in. or 1 by 4 in.
Bracing, diagonal	1 by 4 in.
Tie-ins	1 by 4 in.
Planking	2 by 9 in.
Toeboards	4 in high (minimum)
Guardrails	2 by 4 in.

Use all members on their edge, except planking.

Table 3 – Minimum Nominal Size and Maximum Spacing of Members of Single Pole Scaffolds – Heavy Duty

Uniformly distributed load	Not more than 75 pounds per square foot.
Maximum height of scaffold	60 ft.
Poles or uprights	4 by 4 in.
Pole spacing (longitudinal)	6 ft. 0 in.
Maximum width of scaffold	5 ft. 0 in.
Bearers or putlogs	2 by 9 in. or 3 by 4 in. (rough)
Spacing of bearings or putlogs	6 ft. 0 in.
Ledgers	2 by 9 in.
Vertical spacing of horizontal members	6 ft. 6 in.
Bracing, horizontal	2 by 4 in.
Tie-ins	1 by 4 in.
Planking	2 by 9 in.
Toeboards	4 in high (minimum)
Guardrails	2 by 4 in.

Use all members on their edge, except planking.

Table 4 – Minimum Nominal Size and Maximum Spacing of Members of Independent Pole Scaffolds – Light Duty

	Maximum height of scaffold	
	20 feet	**60 feet**
Uniformly distributed load	Not to exceed 25 pounds per square foot.	
Poles or uprights	2 by 4 in	4 by 4 in.
Poles spacing (longitudinal)	6 ft. 0 in	10 ft. 0 in.
Poles spacing (transverse)	6 ft. 0 in.	10 ft. 0 in
Ledgers	1 1/4 by 4 in	1 1/4 by 9 in.
Bearers or putlogs to 3 ft. 0 in width	2 by 4 in	2 by 4 in.
Bearers or putlogs to 10 ft. 0 in width	2 by 6 in. or 3 by 4 in	2 by 9 in. (rough) or 3 by 8 in.
Planking	1 1/4 by 9 in	2 by 9 in.
Vertical spacing of horizontal members	7 ft. 0 in.	7 ft. 0 in.
Bracing, horizontal and diagonal	1 by 4 in	1 by 4 in.
Tie-ins	1 by 4 in	1 by 4 in.
Toeboard	4 in high	4 in. high (minimum)
Guardrail	2 by 4 in	2 by 4 in.

Use all members on their edge, except planking.

Table 5 – Minimum Nominal Size and Maximum Spacing of Members of Independent Pole Scaffolds – Medium Duty

Uniformly distributed load	Not to exceed 50 pounds per square foot.
Maximum height of scaffold	60 ft.
Poles or uprights	4 by 4 in.
Pole spacing (longitudinal)	8 ft. 0 in.
Pole spacing (transverse)	8 ft. 0 in.
Ledgers	2 by 9 in.
Vertical spacing of horizontal members	6 ft. 0 in.
Spacing of bearings	8 ft. 0 in.
Bearers	2 by 9 in. (rough) or 2 by 10 in.
Bracing, horizontal	1 by 6 in. or 1 1/4 by 4 in.
Bracing, diagonal	1 by 4 in.
Tie-ins	1 by 4 in.
Planking	2 by 9 in.
Toeboards	4 in high (minimum)
Guardrails	2 by 4 in.

Use all members on their edge, except planking.

Table 6 – Minimum Nominal Size and Maximum Spacing of Members of Independent Pole Scaffolds – Heavy Duty

Uniformly distributed load	Not to exceed 75 pounds per square foot.
Maximum height of scaffold	60 ft.
Poles or uprights	4 by 4 in.
Pole spacing (longitudinal)	6 ft. 0 in.
Pole spacing (transverse)	6 ft. 0 in.
Ledgers	2 by 9 in.
Vertical spacing of horizontal members	4 ft. 6 in.
Bearers	2 by 9 in. (rough)
Bracing, horizontal and diagonal	2 by 4 in.
Tie-ins	1 by 4 in.
Planking	2 by 9 in.
Toeboards	4 in high (minimum)
Guardrails	2 by 4 in.

Use all members on their edge, except planking.

(5) Tubular welded frame scaffolds.

(a) Metal tubular frame scaffolds, including accessories such as braces, brackets, trusses, screw legs, ladders, etc., must be able to safely support four times the maximum intended load.

(b) Spacing of panels or frames must be consistent with the loads imposed.

(c) Scaffolds must have cross bracing or diagonal braces, or both, to secure vertical members together laterally. The cross braces must be long enough to automatically square and aline vertical members so that the erected scaffold is always plumb, square, and rigid. All brace connections must be secure.

(d) Scaffold legs must be on adjustable bases or plain bases on mud sills or other foundations adequate to support the maximum intended load.

(e) The frames must be one on top of the other with coupling or stacking pins to provide proper vertical alignment of the legs.

(f) Where uplift may occur, lock panels together vertically with pins or other equivalent means.

(g) Install guardrails, 2 x 4 inches or the equivalent, between 36 inches and 42 inches high at all open sides on all scaffolds more than 10 feet above the ground or floor. The midrail, when required, must be 1 x 4-inch lumber or equivalent, and there must be toeboards at least 4 inches high. Use wire mesh according to paragraph **OAR 437-004-0370(3)(n)**.

(h) All tubular metal scaffolds must be able to support four times the maximum intended loads.

(i) To prevent movement, secure the scaffold to the building or structure at intervals not more than 30 feet horizontally and 26 feet vertically.

(j) Maximum permissible spans of planking must conform with paragraph **OAR 437-004-0370(3)(g)**.

(k) A registered professional engineer must design drawings and specifications for frame scaffolds more than 125 feet high above the base plates. Copies must be available to the employer and for inspection purposes.

(l) Only competent and experienced personnel may set up tubular welded frame scaffolds.

(m) Frames and accessories for scaffolds must be in good repair. Remove them from use until they have no defects, unsafe conditions and are in compliance with this section. Do not use any broken, bent, excessively rusted, altered, or otherwise structurally damaged frames or accessories.

(n) Make periodic inspections of all welded frames and accessories. Complete any maintenance, including painting, or minor corrections recommended by the manufacturer, before further use.

(6) Boatswain's chairs.

(a) The chair seat must be not less than 12 by 24 inches, and 1-inch thick. Use a seat with reinforcement on the underside to prevent the board from splitting.

(b) The two seat slings must be 5/8-inch diameter fiber rope or equivalent, reeved through the four seat holes to cross each other on the underside of the seat.

(c) Seat slings must be at least 3/8-inch wire rope when a worker is using a heat producing process such as gas or arc welding.

(d) Protect the worker with a safety life belt and lifeline attached to substantial members of the structure (not the scaffold), or to securely rigged lines, that will safely suspend the worker in case of a fall.

(e) The tackle must have the correct size ball bearing or bushed blocks and properly spliced 5/8-inch diameter first-grade manila or equivalent.

(f) The roof irons, hooks, or the object to which the tackle is anchored must be secure. Tiebacks, when used, must be at right angles to the face of the building and securely fastened to a substantial anchor point.

(7) Horse scaffolds.

(a) Horse scaffolds must not be more than two tiers or 10 feet high.

(b) The members of the horses must be not less than those in Table 7.

Table 7
Minimum Dimensions for Horse Scaffold Members

Members	Dimensions (inches)
Horizontal members or bearers	3 by 4
Legs	1 1/4 by 4 1/2
Longitudinal brace between legs	1 by 6
Gusset brace at top of legs	1 by 8
Half diagonal braces	1 1/4 by 4 1/2

(c) Space horses not more than 5 feet for medium duty and not more than 8 feet for light duty.

(d) When arranged in tiers, each horse must be directly over the horse in the tier below.

(e) On all scaffolds arranged in tiers, nail the legs to the planks to prevent displacement or thrust and cross brace each tier.

(f) Do not use horses or parts that are weak or defective.

(g) Install guardrails, 2 x 4 inches or the equivalent, between 36 inches and 42 inches high at all open sides on all scaffolds more than 10 feet above the ground or floor. The midrail, when required, must be 1 x 4-inch lumber or equivalent, and there must be toeboards at least 4 inches high. Use wire mesh according to paragraph **OAR 437-004-0370(3)(n)**.

(8) Ladder-jack scaffolds.

(a) All ladder-jack scaffolds are only for light duty and may not be more than 20 feet above the floor or ground.

(b) All ladders used with ladder-jack scaffolds must be heavy-duty and designed and constructed according to 437-004-0340. Do not use stepladders.

(c) The ladder jack must bear on the side rails in addition to the ladder rungs, or if bearing on rungs only, the bearing area must be at least 10 inches on each rung.

(d) To prevent slipping, use special devices, secure placement or anchor ladders used with ladder jacks.

(e) The wood platform planks must be not less than 2 inches (nominal) thick. Both metal and wood platform planks must overlap the bearing surface not less than 12 inches. The span between supports for wood must be not more than 8 feet. The platform must be at least 18 inches wide.

(f) Not more than two persons may be on any given 8 feet of a ladder-jack scaffold at one time.

(9) Roofing brackets.

(a) Roofing brackets must fit the pitch of the roof.

(b) Nail brackets in place in addition to using the pointed metal projections. Drive the nails all the way into the roof. When using rope supports, they must be first-grade manila of at least 3/4-inch diameter, or equivalent.

(c) A substantial catch platform must be below the working area of roofs more than 20 feet from the ground to eaves with a slope more than 3 inches in 12 inches and no parapet. In width the platform must extend 2 feet beyond the projection of the eaves and have a safety rail, midrail, and toeboard that complies with **OAR 437-004-1020**. This does not apply where employees are using a personal fall protection system.

(10) Crawling boards or chicken ladders.

(a) Crawling boards must be not less than 10 inches wide and 1-inch thick, with 1 x 1 1/2 inch cleats. The cleats must be equal in length to the width of the board and spaced at equal intervals not more than 24 inches. Drive nails through and clinch them on the underside. The crawling board must extend from the ridge pole to the eaves when used with roof construction, repair, or maintenance.

(b) A firmly fastened lifeline of at least 3/4-inch rope must be strung beside each crawling board for a handhold.

(c) Use adequate ridge hooks or equivalent effective means to secure crawling boards to the roof.

(11) Manually propelled mobile scaffolds.

(a) The height of free-standing mobile scaffold towers must not be more than four times the smallest base dimension.

(b) Casters must be able to support four times the maximum intended load. All casters must have a positive locking device.

(c) Scaffolds must have cross bracing and horizontal bracing.

(d) Platforms must have tight planking for the full width of the scaffold except for necessary entrance opening. Platforms must not be free to move.

(e) There must be a fixed or built-in ladder or stairway for access and exit.

(f) Move the mobile scaffold by force applied near or as close to the base as practicable. Keep the scaffold stable during movement. Move scaffolds only on level floors with no obstructions or openings.

(g) Workers may not ride on manually propelled scaffolds unless the following conditions exist:

(A) The floor or surface is within 3 degrees of level, and free from pits, holes, or obstructions;

(B) The smallest dimension of the scaffold base is at least one-half of the height. If it has outriggers, they must be on both sides of the staging;

(C) The wheels have rubber or similar resilient tires.

(h) Scaffolds must rest upon a suitable footing and be plumb. Lock the casters or wheels to prevent unintended movement.

(i) Guardrails made of lumber, not less than 2 X 4 inches (or other material providing equivalent protection), between 39 and 42 inches high, with a midrail and toeboards, must be on all open sides and ends of scaffolds more than 10 feet above the ground or floor. Toeboards must be at least 4 inches high. If people may pass under the scaffold, use wire mesh between the toeboard and top of the guardrail.

Stat. Auth.: ORS 654.025(2) and 656.726(4).
Stats. Implemented: ORS 654.001 through 654.295.
Hist: OR-OSHA Admin. Order 4-1998, f/8/28/98, ef. 10/1/98.

437-004-0380 Manually Propelled Mobile Ladder Stands and Scaffolds (Towers).

Standards for the use of mobile work platforms and scaffolds are found in Division 2, Subdivision D, 1910.29 which applies to agricultural places of employment.

Stat. Auth.: ORS 654.025(2) and 656.726(4).
Stats. Implemented: ORS 654.001 through 654.295.
Hist: OR-OSHA Admin. Order 4-1998, f/8/28/98, ef. 10/1/98.

437-004-0390 Other Working Surfaces.

(1) Dockboards (bridge plates).

(a) Use bridge plates over any gap of more than 4 inches between two surfaces.

(b) Portable and powered dockboards must be strong enough to carry the load imposed on them.

(c) Anchor portable dockboards or use devices that prevent them from slipping.

(d) Powered dockboards must comply with Commercial Standard CS202-56 (1961) "Industrial Lifts and Hinged Loading Ramps" published by the U.S. Department of Commerce.

(e) Portable dockboards must have handholds or other ways to allow safe handling.

(f) There must be positive protection to prevent railroad cars from moving while dockboards or bridge plates are in position.

(g) Bridgeplates must be able to carry four times the heaviest expected load.

(h) Bridgeplates must sit evenly on the surface at each end. Repair or replace plates that teeter or rock.

(2) Floors.

(a) Floors, floor supports, and required appurtenances must be in good repair.

(b) Floors must not be slippery.

(3) Ramps and runways.

(a) Ramps and runways must be in safe condition.

(b) Ramps and runways for vehicles must be wide enough and have an even surface. They must have timber guards of not less than nominal 6-inch by 6-inch material set on nominal 3-inch blocks, or the equivalent, secured to the sides of the ramp or runway.

Stat. Auth.: ORS 654.025(2) and 656.726(4).
Stats. Implemented: ORS 654.001 through 654.295.
Hist: OR-OSHA Admin. Order 4-1998, f/8/28/98, ef. 10/1/98.

– END OF DOCUMENT –

TABLE OF CONTENTS

437-004-0405 Exits and Emergency Action Plan E-1
(1) Application E-1
(2) Definitions E-1
(3) General E-1
(4) Design E-1
(5) Marking E-2
(6) Special situations E-2

437-004-0450 Emergency Action Plan E-2

437-004-0405 Exits and Emergency Action Plan.

(1) Application. This does not apply to agricultural labor housing, agricultural buildings or mobile workplaces, such as vehicles or vessels. This applies to non-agricultural type buildings like offices and warehouses where employees spend most of their work time.

(2) Definitions.

Exit. The part of the exit route, separate from other areas, that is a protected way out of a work area.

Exit route. A continuous, unobstructed path from anywhere in a work area to a safe outside place. Exit routes are three dimensional.

(3) General.

(a) There must be permanent, unobstructed exit routes to get out of work areas safely during emergencies.

(b) There must be two or more exit routes depending on the size and layout of the work area and the number of people involved. A single exit route is acceptable only if all workers can get out through it safely during an emergency. Locate multiple exit routes apart from each other.

(4) Design.

(a) There must be a clear and unobstructed access and exit to any location more than 4 feet above or below the floor. Access may be by a ladder, stairs or ramp that complies with these standards.

(b) There must be unobstructed access to exit routes.

(A) Exit routes must not pass through or into lockable rooms or dead ends.

(B) Exit routes must be mostly level or have stairs or ramps.

(c) Exits must open from the inside without keys, tools or special knowledge. Devices that lock only from the outside are acceptable. There must be nothing on an exit door that could hinder its use during an emergency.

(d) An exit route must be able to handle the maximum number of persons allowed in the area it serves. Exit capacity must not decrease if the direction of travel changes.

(e) Exit routes must be at least 6 feet 8 inches high at all points.

(f) Exit routes must be at least 28 inches wide between handrails and wider if needed to handle the expected occupant load.

(g) Nothing can project into an exit route that reduces its minimum height or width.

(h) Exit routes must minimize danger to workers during emergencies.

(i) Exit routes must have adequate lighting.

(5) Marking.

(a) There must be exit signs at all emergency exits, except those that are obviously and clearly identifiable. Install additional directional signs to exits where necessary.

(b) If workers could mistake a nonexit for an exit, mark it, “Not an Exit” or mark it to indicate its real use.

(6) Special situations.

(a) Exit doors serving hazardous areas must swing in the direction of exit and open in a way that does not obstruct exit passageways. Do not allow anything to obstruct or prevent the use of an exit. During fire or panic, it must be easy to open all escape exit doors and windows from the inside.

(b) Rooms subject to extremes in temperature or with toxic atmospheres must have at least one door that opens from the inside. If this door is lockable from the outside, lighting and a set of instructions for opening the door must be inside the room on or near the door. It must be easy to find equipment needed to open the door from the inside. Also, inside the room there must be a way to communicate or a control that operates an alarm outside the building, or if other employees are on duty 24 hours a day, outside the room.

Stat. Auth.: ORS 654.025(2) and 656.726(4).
Stats. Implemented: ORS 654.001 through 654.295.
Hist: OR-OSHA Admin. Order 4-1998, f/8/28/98, ef. 10/1/98.
OR-OSHA Admin. Order 9-2006, f. 9/22/06, ef. 9/22/06.

437-004-0450 Emergency Action Plan.

(1) The plan must be in writing, be kept in the workplace and be available to employees. Employers with fewer than 11 permanent, year-around workers may have a verbal plan.

(2) An emergency action plan must include:

(a) Procedures for reporting a fire or other emergency;

(b) Procedures for emergency operation or shut down of critical equipment;

(c) Procedures for rescue and medical duties; and,

(d) Names or job titles of employees to contact to get more information about the duties of employees under the plan.

(3) There must be a communication system to alert employees or an employee alarm system with a distinctive signal for each purpose.

(4) The employer must review the emergency action plan with each covered employee:

(a) When the plan is new or the employee is new to the job;

(b) When the employee's responsibilities under the plan change; and,

(c) When the plan changes.

Stat. Auth.: ORS 654.025(2) and 656.726(4).
Stats. Implemented: ORS 654.001 through 654.295.
Hist: OR-OSHA Admin. Order 4-1998, f/8/28/98, ef. 10/1/98.

– END OF DOCUMENT –

TABLE OF CONTENTS

437-004-0570 Manlifts F-1
(1) Application F-1
(2) Definitions F-1
(3) General requirements F-1
(4) Mechanical requirements F-5
(5) People only F-8
(6) Periodic inspection F-8

437-004-0570 Manlifts.

(1) Application. Manlifts covered here have platforms or brackets and handholds mounted on or attached to an endless belt that runs vertically in one direction only. Its support and drive are through top and bottom pulleys. Manlifts are for moving people only. This does not cover moving stairways, elevators with enclosed platforms ("Paternoster" elevators), gravity lifts nor conveyors used only to convey material.

(2) Definitions.

Closed type. A cup-shaped device, open at the top in the direction of travel, and closed at the bottom.

Handhold (Handgrip). A device attached to the belt for the passenger to hold.

Limit switch. A device to cut off the power to the motor and apply the brake to stop the carrier when a loaded step passes the terminal landing.

Manlift. A power-driven endless belt moving only in one direction and with steps or platforms and handholds for the transportation of personnel from floor to floor.

Open type. One with a fully exposed handgrip surface that can be encircled by the passenger's fingers.

Rated speed. The designed speed of the device.

Split-rail switch. An electric limit switch operated mechanically by the rollers on the manlift steps. It has an additional hinged or "split" rail, mounted on the regular guide rail, over which the step rollers pass. It is spring loaded in the "split" position. If the step supports no load, the rollers will "bump" over the switch. If a loaded step passes over it, the split rail will be forced straight, tripping the switch and opening the electrical circuit.

Step (platform). A step is a passenger carrying unit.

Travel. The travel is the distance between the centers of the top and bottom pulleys.

(3) General requirements.

(a) Design requirements. Equipment installed after June 27, 1974 must comply with "American National Standard for Manlifts ANSI A90.1-1969."

(b) Floor openings.

(A) Allowable size. Floor openings for both the "up" and "down" runs must be between 28 inches and 36 inches wide for a 12-inch belt; between 34 inches and 38 inches wide for a 14-inch belt; and between 36 inches and 40 inches wide for a 16-inch belt. They must extend at least 24 inches, but not more than 28 inches from the face of the belt.

(B) Uniformity. All floor openings for a manlift must be the same size and approximately circular.

(c) Landing.

(A) Vertical clearance. The clearance between the floor or mounting platform and the lower edge for the conical guard above it required by **(d)** below must be at least 7 feet 6 inches. Do not allow access to the manlift if this clearance is not possible. Enclose the manlift runway where it passes through the floor.

(B) Clear landing space. Keep the landing space around the floor openings unobstructed and clear. This landing space will be at least 2 feet wide from the edge of the floor opening.

(C) Lighting and landing. Lighting must be not less than 5 foot-candles, at each floor landing when the lift running.

Note: A 40-watt or larger light bulb should provide the equivalent to 5 foot-candles.

(D) Landing surface. There must be safe footing at landing surfaces.

(E) Emergency landings. If the travel is 50 feet or more between floor landings, there must be one or more emergency landings. There must be a landing (either floor or emergency) for every 25 feet or less of manlift travel.

(i) Emergency landings must be accessible from both the “up” and “down” rungs of the manlift. They must give access to the ladder as required in **OAR 437-004-0570(i)**.

(ii) Completely enclose emergency landings with a standard railing and toeboard.

(iii) Platforms built for access to bucket elevators or other equipment for inspection or maintenance may also be emergency landings. All such platforms are then part of the emergency landing and must have standard railings and toeboards.

(d) Guards on underside of floor openings.

(A) Fixed type. The ascending side of the manlift floor openings must have a bevel guard or cone meeting the following requirements:

(i) The cone must be at an angle of not less than 45 degrees with the horizontal. Use an angle of 60 degrees or greater where ceiling heights permit.

(ii) The lower edge of this guard must extend at least 42 inches outward from any handhold on the belt. It must not extend beyond the upper surface of the floor above.

(iii) The cone must be at least No. 18 U.S. gauge sheet steel or material of equivalent strength or stiffness. Roll the lower edge to a minimum diameter of 1/2-inch. The interior must be smooth with no rivets, bolts or screws protruding.

(B) Floating type. A floating safety cone is acceptable instead of the fixed guards in **(A)** above. They must be mounted on hinges at least 6 inches below the underside of the floor. A force of 2 pounds on the edge of the cone closest to the hinge must actuate a limit switch. The maximum depth of this floating cone is 12 inches.

(e) Protection of entrances and exits.

(A) Guardrail requirement. Guard the entrances and exits at all floor landings with access to the manlift with a maze (staggered railing) or a standard guardrail with self-closing gates.

(B) Construction. The rails will be standard guardrails with toeboards as described in OAR 437-004-0320(6).

(C) Gates. Gates must open outward and be self-closing. Round the corners of gates.

(D) Maze. Maze or staggered openings must offer no direct passage between enclosure and outer floor space.

(E) Except where building layout prevents it, entrances at all landings must be in the same relative position.

(f) Guards for openings.

(A) Construction. Use a wall, standard guardrail and toeboard or wire mesh panels to guard the floor opening at each landing on sides not used for entrance or exit.

(B) Height and location. Guards for openings must be at least 42 inches high on the up-running side and 66 inches on the down-running side.

(g) Bottom arrangement.

(A) Bottom landing. At the bottom landing the clear area must not be smaller than the area enclosed by the guardrails on the floors above. Any wall in front of the down-running side of the belt must be at least 48 inches from the face of the belt. There must be no stairs or ladders in this space.

(B) Location of lower pulley. The lower (boot) pulley must be supported by the lowest landing served. Guard the sides of the pulley support to prevent contact with the pulley or the steps.

(C) Mounting platform. There must be a mounting platform in front or to one side of the up run at the lowest landing. This is not necessary if the floor level allows the floor or platform to be at or above the point where the upper surface of the ascending step completes its turn and becomes horizontal.

(D) Guardrails. Guard the area on the downside of the manlift according to **OAR 437-004-0570(e)**. Protect the area between the belt and the platform with a standard guardrail.

(h) Top arrangements.

(A) Clearance from floor. There must be at least 11 feet of top clearance above the top terminal landing. This clearance must be from a plane through each face of the belt to a vertical cylindrical plane having a diameter 2 feet greater than the diameter of the floor opening, extending upward from the top floor to the ceiling on the up-running side of the belt. There must be no encroachment of structural or machine supporting members within this space.

(B) Pulley clearance.

(i) There must be at least 5 feet between the center of the head pulley shaft and any ceiling obstruction.

(ii) The center of the head pulley shaft must be at least 6 feet above the top terminal landing.

(C) Emergency grab rail. There must be an emergency grab bar or rail and platform at the head pulley when the distance to the head pulley is more than 6 feet above the top landing. Otherwise there must be only a grab bar or rail to allow the rider to swing free if the emergency stops do not work.

(i) Emergency exit ladder. Provide a fixed metal ladder accessible from both the “up” and “down” run of the manlift for the entire travel of the manlift. The ladder must meet ANSI A14.3-1956, Safety Code for Fixed Ladders.

(j) Superstructure bracing. Secure manlift rails to avoid spreading, vibration, and misalignment.

(k) Lighting.

(A) General. There must be adequate lighting for both runs of the manlift when it is running. (See **OAR 437-004-0570(3)(c)(C)** for lighting requirements at landings.)

(B) Control of lighting. Circuits for lighting of manlift runways must be permanently tied to the building circuits with no switches or there must be switches at each landing. Where there are separate switches at each landing, every switch must work all lights for the entire runway.

(l) Weather protection. Protect the manlift and its driving mechanism from the weather.

(4) Mechanical requirements.

(a) Machines, general.

(A) Brakes. Brakes for stopping and holding a manlift must be inherently self-engaging, require power or force from an external source to cause disengagement. The brake must release electrically and work on the motor shaft for direct-connected units or the input shaft for belt-driven units. The brake must be able to stop and hold the manlift when the descending side is loaded with 250 pounds on each step.

(B) Belt.

(i) The belts must be of hard-woven canvas, rubber-coated canvas, leather or other material meeting the strength requirements of **OAR 437-004-0570(3)(a)**. It must also have a coefficient of friction that when used with an adequate tension device will meet the brake test in **(4)(a)(A)** above.

(ii) The belt must be at least 12 inches wide for travel up to 100 feet, at least 14 inches wide for travel more than 100 feet and up to 150 feet and 16 inches wide for travel more than 150 feet.

(C) Do not splice or use repaired manlift belts.

(b) Maximum speed. Do not install or use a manlift designed for a speed over 80 feet per minute.

(c) Platforms or steps.

(A) Minimum depth. Steps or platforms must be 12 inches to 14 inches deep, measured from the belt to the edge of the step or platform.

(B) Width. The width of the step or platform must be at least as wide as the belt to which it is attached.

(C) Distance between steps. The distance between steps must be equal and at least 16 feet measured from the upper surface of one step to the upper surface of the next step above it.

(D) Angle of step. The surface of the step must be at approximately a right angle with the “up” and “down” run of the belt and must travel an approximate horizontal position with the “up” and “down” run of the belt.

(E) Surfaces. The upper or working surfaces of the step must be nonslip (coefficient of friction not less than 0.5) or have a secure nonslip covering.

(F) Strength of step supports. When loaded with 400 pounds at the approximate center of the step, step frames or supports and their guides must be strong enough to:

(i) Prevent the disengagement of any step roller.

(ii) Prevent any appreciable misalignment.

(iii) Prevent any visible deformation of the steps or its support.

(G) Prohibition of steps without handholds. All steps must have a corresponding handhold above or below them meeting the requirements of **OAR 437-004-0570(4)(d)**. When removing a step or steps, remove corresponding handholds before the lift is restarted.

(d) Handholds.

(A) Location. Handholds attached to the belt must be at least 4 feet but not more than 4 feet 8 inches above the step tread. Locate them on both “up” and “down” run of the belt.

(B) Size. The grab surface of the handhold must be at least 4 1/2 inches wide, at least 3 inches deep and have 2 inches of clearance from the belt. Fastenings for handholds must be at least 1-inch from the edge of the belt.

(C) Strength. The handhold must withstand a load of 300 pounds applied parallel to the run of the belt.

(D) Prohibition of handhold without steps. All handholds must have a corresponding step. When removing handholds permanently or temporarily, remove the corresponding steps and handholds for the opposite direction of travel before restarting the lift.

(E) Type. All handholds must be of the closed type.

(e) Up limit stops.

(A) Requirements. There must be two separate automatic stop devices to cut off the power and apply the brake when a loaded step passes the upper terminal landing. One of these must be a split-rail switch mechanically operated by the step roller and located not more than 6 inches above the top terminal landing. The second automatic stop device may have any of the following:

(i) Any split-rail switch placed 6 inches above and on the side opposite the first limit switch.

(ii) An electronic device.

(iii) A switch actuated by a lever, rod or plate, the latter to be on the “up” side of the head pulley so as to just clear a passing step.

(B) Manual reset location. After a stop device halts the manlift reset must be done manually. The device must be where a person resetting it would have a clear view of both the “up” and “down” runs of the manlift. It must be impossible to reset the device from any step or platform.

(C) Cut-off point. The initial limit stop device must stop the manlift before the loaded step has reached a point 24 inches above the top terminal landing.

(D) Electrical requirements.

(i) When switches open the main motor circuit directly they must be the multi-pole type.

(ii) When using electronic devices they must be designed and installed so that failure will shut off the power to the driving motor.

(iii) Where flammable vapors or combustible dusts may be present, electrical installations must be according to the requirements of Division 4/S for such locations.

(iv) Controller contacts carrying the main motor current must be oil immersed, copper to carbon or equal, except where the circuit is broken at two or more points at once.

(f) Emergency stop.

(A) General. There must be an emergency stop device.

(B) Location. It must be easy reach from the ascending and descending runs of the belt.

(C) Operation. This stop device must cut off the power and apply the brake when pulled in the direction of travel.

(D) Rope. If made of rope, it must be at least 3/8-inch in diameter. Do not use wire rope unless it has plastic covering or equivalent.

(g) Instruction and warning signs.

(A) Instruction signs at landings or belts. At each landing or stenciled on the belt there must be conspicuous and easily read instruction signs for the use of the manlift.

(i) The instructions must read as follows:

Face the Belt.
Use the Handholds.
To Stop - Pull Rope.

(B) Top floor warning sign and light.

(i) At the top floor there must be a lighted sign with the following wording:

"TOP FLOOR – GET OFF"

Signs must have block letters at least 2 inches high. Locate the sign within easy view of an ascending passenger and not more than 2 feet above the top terminal landing.

(ii) In addition to the sign required by **(4)(g)(B)(i)** above, a red warning light of at least 40 watts must be immediately below the upper landing terminal so as to shine in the passenger's face.

(C) Visitor warning. The following conspicuous sign must be at each landing.

- AUTHORIZED PERSONNEL ONLY -

(5) People only. Do not move objects or material on a manlift. Manlifts are for people only.

(6) Periodic inspection.

(a) Frequency. A competent designated person must inspect manlifts at least every 30 days. Check limit switches weekly. Do not use unsafe manlifts until repairs make them safe again.

(b) Items covered. This periodic inspection must cover at least the following items:

Steps	Step Fastenings
Rails	Rail Supports and Fastenings
Rollers and Slides	Belt and Belt Tension
Handholds and Fastenings	Floor Landings
Guardrails	Lubrication
Limit Switches	Warning Signs and Lights
Illumination	Drive Pulley
Bottom (boot) Pulley and Clearance	Pulley Supports
Motor	Driving Mechanism
Brake	Electrical Switches
Vibration and Misalignment	"Skip" on up or down run when mounting step (indicating worn gears).

(c) Inspection record. Keep a certification record of each inspection. It must include the date of the inspection, the signature of the inspector and the serial number or other identifier of the manlift. On request, this record must be made available to OR-OSHA.

Stat. Auth.: ORS 654.025(2) and 656.726(4).
Stats. Implemented: ORS 654.001 through 654.295.
Hist: OR-OSHA Admin. Order 4-1998, f/8/28/98, ef. 10/1/98.

– END OF DOCUMENT –

TABLE OF CONTENTS

437-004-0610 Ventilation G-1

437-004-0630 Noise Exposure G-1
- Noise Monitoring G-2
- Engineering Controls G-2
- Hearing Conservation Program G-3
- Follow-Up G-4
- Training G-5
- Hearing Protection G-5
- Recordkeeping G-5

437-004-0650 Ionizing Radiation G-6

437-004-0610 Ventilation.

(1) Agricultural employers that do abrasive blasting, grinding, polishing and buffing or spray finishing in any part of their operation must follow the standards in OAR 437-002-1910.94 and OAR 437-002-0081 found in Subdivision 2/G.

These paraphrased excerpts are from 1910.94, Ventilation, in the OR-OSHA General Industry Standards, Division 2/G. If the amount or duration of the covered work or processes you do could meet one of the criteria below, consult 437-002-1910.94 in Division 2/G.

Grinding, polishing and buffing.

1910.94(b)(2) Application. You must use a mechanical local exhaust ventilation system to keep the 8-hour time-weighted average (TWA) exposures to substances in 437-004-9000 or other parts of this division, within required limits when dry grinding, dry polishing or buffing whether or not employees use a respirator.

Spray finishing.

1910.94(c)(8) Scope. This paragraph (c) does not apply to exterior spraying of buildings, fixed tanks or similar structures nor to small portable spraying apparatus not used repeatedly in the same location.

Open surface tanks.

1910.94(d)(13)(i) Scope. This paragraph (d) applies to all work involving the immersion of materials in liquids, or in the vapors of such liquids, for cleaning or altering their surfaces, or adding or imparting a finish or changing the character of the materials. It also applies to the subsequent removal from the liquids or vapors, draining, and drying. Such work includes washing, pickling, quenching, dyeing, dipping, bleaching, degreasing, alkaline cleaning, stripping, rinsing and similar processes. It does not include molten materials handling or surface coating.

Stat. Auth.: ORS 654.025(2) and 656.726(4).
Stats. Implemented: ORS 654.001 through 654.295.
Hist: OR-OSHA Admin. Order 4-1998, f/8/28/98, ef. 10/1/98.

437-004-0630 Noise Exposure.

(1) You must have a noise monitoring program (see **(3)** below) when an employee's exposure equals or is more than an 8-hour time-weighted average (TWA) of 85 decibels (dB).

NOTE: Most large or older farm machines and tractors, especially those without cabs, have the potential to produce more than 85 decibels of noise. Audiologists often say that if you have to shout or significantly raise your voice to talk with somebody 2 feet away, the noise is probably at the action level of 85 decibels.

(2) Noise classified as impulse or impact noise cannot be more than 140 dB peak sound pressure level.

NOTE: These noises are sudden and sharp and include such things as the firing of a weapon and sudden release of pressurized air.

Noise Monitoring

(3) Employers must use a noise sampling strategy that determines which employees need to be part of a hearing conservation program. This sampling will also determine their need for hearing protection or when to consider engineering controls.

(a) Use a sound level meter or a dosimeter to do noise level surveys over an 8-hour period to get a time-weighted average. When the employees are mobile or there are significant changes in the sound level or impulse noise components, you must use representative personal sampling unless area samples produce equal results.

(b) Repeat the noise surveys when there is a change in production, process, equipment or controls that increases noise levels or exposures to or above the action level. Also repeat the surveys if the increase in noise may require additional noise reduction from hearing protectors already in use.

(c) Notify each monitored employee of the noise monitoring results if the exposure was at or above the 85 decibel TWA.

(d) The employer must give affected employees or their representatives the opportunity to observe the noise survey process.

WARNING: Employer responsibilities in this standard require special knowledge and equipment to be done successfully. In most cases it is advisable and in some cases mandatory to have these tests done by a professional. See **OAR 437-004-0630(5)(c)**.

Engineering Controls

(4) If the noise survey results are more than in Table 1 below, use administrative or engineering controls to reduce the noise, if feasible. If not feasible or if the engineering or administrative controls fail to reduce the noise to levels within Table 1 limits, provide appropriate training and enforce the use of hearing protection to reduce the noise to levels within the Table 1.

(a) You must provide all hearing protection equipment and devices without cost to the employee. Employees may voluntarily elect to use their own equipment but the employer is responsible to assure that it provides adequate protection.

(b) All hearing protection equipment and devices must be kept serviceable and clean according to the manufacturer's recommendations or accepted audiological practices.

Table 1
Permissible Noise Exposures [1]

Duration per day, hours	Sound level dBA slow response
8	90
6	92
4	95
3	97
2	100
1 1/2	102
1	105
1/2	110
1/4 or less	115

Hearing Conservation Program

(5) Establish and maintain an effective hearing conservation program for employees whose noise exposure equals or is more than an 8-hour TWA of 85 decibels, or an equivalent dose, before attenuation by hearing protectors. The program must include an audiometric (hearing) testing program, employee training and personal hearing protection.

(a) All parts of the hearing conservation program must be without charge to employees.

(b) You must tell the employees to avoid high levels of non-occupational noise exposure during the 14-hour period before any hearing test. Also, you must assure that the employee uses hearing protection or avoids noise exposure on the job for 14 hours before getting a baseline hearing test.

(c) Only a technician certified by the Council of Accreditation in Occupational Hearing Conservation, a licensed or certified audiologist, otolaryngologist or other physician may do a hearing test. Certified technicians must be responsible to an audiologist, otolaryngologist or physician.

NOTE: Audiograms must meet the requirements of OAR 437-002-1910.95, Appendix C, Audiometric Measuring Instruments. The background noise in the test room must comply with OAR 437-002-1910.95, Appendix D, Audiometric Test Rooms. The audiometers used for the test and the methods must comply with the American National Standard Specifications for Audiometers, S3.6-1969. Oregon OSHA strongly suggests that employers hire a professional to provide services required by this standard.

(6) There are two types of hearing tests required by this standard.

(a) A baseline hearing test must be done within 6 months of the employees first exposure to noise at or above the action level. This test is the comparison base for future tests.

(b) After the baseline audiogram is done, each employee still exposed at or above the 8-hour TWA must have annual hearing tests. Compare the annual tests to the baseline tests to determine if there has been a standard threshold shift.

(c) The audiologist, otolaryngologist or physician evaluation of the audiogram may revise the baseline when the standard threshold shift in hearing revealed by the test is persistent or the hearing threshold shows an improvement over the baseline audiogram.

(7) For purposes of this standard a standard threshold shift of hearing compared to the baseline hearing test is called a standard threshold shift and is an average of 10 dB or more at 2000, 3000, and 4000 Hz in either ear. In Oregon there is no allowance from age correction charts for this calculation.

Follow-Up

(8) The qualified person doing the hearing test will compare the results of the annual hearing test to the baseline audiogram to see if it is valid and if there has been a standard threshold shift change in hearing as in **(7)** above.

(a) The employer may retest to assure validity within 30 days and use that as the annual test.

(b) An audiologist, otolaryngologist or physician must review all problem audiograms to determine the need for more evaluation. This may include follow up as described below.

(c) The employer is responsible to pay for this evaluation.

(d) The employer must assure that the reviewing audiologist, otolaryngologist or physician has the following information:

(A) A copy of the requirements for hearing conservation in this section.

(B) The employees baseline and most recent audiogram.

(C) Measurements of the noise levels in the audiometric test room.

(D) Records of audiometer calibrations as required by this section.

(9) If an employee's hearing test reveals a standard threshold shift, the employer must do **(a)** through **(d)** below unless the physician determines that the shift is not work-related or aggravated by work-related noise exposure.

(a) Fit employees with hearing protection, train them in its use and care. Require them to use it.

(b) Refit and retrain employees already using hearing protectors. Give them hearing protectors that offer more noise reduction.

(c) Refer the employee for a clinical audiological evaluation or an otological examination, as appropriate, if additional testing is necessary. Also refer the employee to the physician if the wearing of hearing protectors causes or aggravates a medical problem of the ear.

(d) Inform the employee of the need for an otological examination if a medical pathology of the ear could be unrelated to the use of hearing protectors.

(10) If future hearing tests show that the standard threshold shift of hearing is not persistent and the noise exposure is less than a 8-hour TWA of 90 decibels the employer must tell the employee of the new results and may end the required use of hearing protectors.

Training

(11) All employees exposed at or above the 8-hour TWA of 85 decibels must receive initial and annual training. Update the training program if there are changes in the hearing protection or work processes. The training program must include:

(a) The effects of noise on hearing.

(b) The purpose of hearing protectors, the advantages, disadvantages and attenuation of various types and instructions on selection, fitting, use and care.

(c) The purpose of the hearing test and an explanation of the test procedures.

Hearing Protection

(12) Hearing protection must be available at no cost to all employees exposed to an 8-hour TWA of 85 dB. Wearing of hearing protection that offers adequate noise reduction is mandatory for employees exposed at 90 dB TWA. In addition, if an employee has had a standard threshold shift, they must wear hearing protection at 85 decibels or more.

(a) The employer must ensure proper initial fitting of the hearing protectors, supervise the correct use of them, and provide training in the use and care of the hearing protectors.

(b) The employees must have the chance to select the hearing protectors from a variety of appropriate hearing protectors and the hearing protectors must reduce the noise to at least an 8-hour TWA of 90 decibels.

(c) When noise exposure increases enough that the hearing protectors may no longer give proper protection, reevaluate the adequacy of the protectors noise reduction. Provide more effective hearing protection where necessary.

Recordkeeping

(13) The employer must keep employees noise exposure records according to the Access to Employee Exposure and Medical Records standard OAR 437-004-0005. The records must be available to employees, former employees, representatives designated by the employee and Oregon OSHA. The test record must include:

(a) Name and job classification of the employee.

(b) Date of the audiogram.

(c) The examiner's name.

(d) Date of the last acoustic or exhaustive calibration of the audiometer.

(e) Employees most recent noise exposure assessment.

(14) If you sell your business, give the buyer all records required by this section.

NOTE: The professional who does your audiometric work will supply most of the records required by this section.

Stat. Auth.: ORS 654.025(2) and 656.726(4).
Stats. Implemented: ORS 654.001 through 654.295.
Hist: OR-OSHA Admin. Order 4-1998, f/8/28/98, ef. 10/1/98.
OR-OSHA Admin. Order 9-2006, f. 9/22/06, ef. 9/22/06.

437-004-0650 Ionizing Radiation.

NOTE: The Oregon Department of Human Resources, Health Division, enforces 1910.96 Ionizing Radiation and 437-004-0650 in Oregon, under an Interagency Agreement with the Department of Consumer and Business Services, OR-OSHA Division. Copies are available from OR-OSHA and the Health Division.

In addition to and not instead of 1910.96, the rules and regulations in ORS 453.0605 to 453.0745, Control of Radiation, administered by the Department of Human Resources, Oregon Health Division, apply to all employees working with or near ionizing radiation sources.

Stat. Auth.: ORS 654.025(2) and 656.726(4).
Stats. Implemented: ORS 654.001 through 654.295.
Hist: OR-OSHA Admin. Order 4-1998, f/8/28/98, ef. 10/1/98.

– END OF DOCUMENT –

TABLE OF CONTENTS

437-004-0710 Compressed Gases H-1

437-004-0715 Acetylene H-2
(1) Cylinders H-2
(2) Piped systems H-2

437-004-0716 Oxygen H-2
(1) Scope H-2
(2) Bulk oxygen systems H-2

437-004-0717 Hydrogen H-7

437-004-0720 Flammable Liquids H-7
(1) Definitions H-7
(2) Storage and transporting H-8
(3) Tanks and containers H-9
(4) Tanks elevated for gravity discharge H-10
(5) Tanks with top openings only H-10
(6) Dispensing and fueling H-10
(7) Handling and use of flammable liquids H-11
(8) Heating devices that use flammable liquids H-11
(9) Design, construction, and capacity of storage cabinets H-12
(10) Design and construction of inside storage rooms H-12

Appendix A to OAR 437-004-0720 ..... H-15

437-004-0725 Spray Finishing H-17

437-004-0770 Explosives and Blasting Agents H-17

437-004-0780 Storage and Handling of Liquefied Petroleum Gases H-17
(1) Definitions H-17
(2) Scope H-18
(3) Basic rules H-19
(4) Cylinder systems H-45
(5) Systems using containers other than DOT containers H-49
(6) Liquefied petroleum gas as a motor fuel H-56
(7) Storage of containers awaiting use H-61
(8) Liquefied petroleum gas dispensing H-62

437-004-0790 Use of Liquefied Petroleum Gas or Natural Gas in Fields and Orchards H-68
(1) Scope H-68
(2) Definitions H-68
(3) Components H-68
(4) Installation H-69
(5) Welding H-69

437-004-0800 Storage and Handling of Anhydrous Ammonia H-69
(1) Scope H-69
(2) Definitions H-69
(3) Basic rules H-70
(4) Systems using stationary, non-refrigerated storage containers H-79
(5) Refrigerated storage systems H-81
(6) Systems using portable DOT containers H-84
(7) Tank motor vehicles for the transportation of ammonia H-85
(8) Systems on farm vehicles other than for the application of ammonia H-87
(9) Systems on farm vehicles for the application of ammonia H-88

437-004-0950 Hazardous Waste Operations and Emergency Response H-89

437-004-0710 Compressed Gases.

(1) Employers are responsible to keep compressed gas cylinders under their control in a safe condition by doing visual inspections that cover these points:

(a) Corrosion or pitting which reduces the wall thickness.

(b) Cuts, gouges or digs.

(c) Dents, bulges or other distortion or unsymmetrical condition or appearance.

(d) Distortion, looseness or failure of welds in the cylinder rings.

(e) Evidence of having been burned or exposed to fire, arc or torch burns.

(f) Damage to cylinder neck threads or inability to obtain a gas-tight seal by reasonable methods.

(2) If a compressed gas cylinder or tank shows any of the above conditions, or any other condition that could affect its safety, do not use it. Do not return it to service until it is thoroughly inspected by a person qualified to do so and they find it to be safe and in compliance with the Compressed Gas Association directives.

(3) The handling, storage, and use of all compressed gases in cylinders, portable tanks or motor vehicle cargo tanks must comply with the following:

(a) Do not use cylinders without a legible label identifying the contents.

(b) Keep the cylinder caps on except when the gauges are on the cylinder.

(c) Do not use cylinders for rollers, supports or for any purpose other than to contain the product.

(d) Do not place cylinders where they may become part of an electrical circuit. Do not ground cylinders used in conjunction with electric welding.

(e) Do not subject cylinders to temperatures above 125 degrees F. If ice or snow accumulates on a cylinder, thaw at room temperature or with water less than 125 degrees F.

(f) Contact your gas supplier when in doubt about proper handling of the cylinder.

(g) When returning empty cylinders, close the valve and replace the valve protection cap.

(h) Do not drag or slide cylinders.

(i) Do not drop or permit cylinders to strike against each other or other surfaces violently.

(j) Do not lift cylinders by the protective cap or with magnets.

(k) Do not suspend cylinders from ropes, chains or slings unless the cylinder was manufactured with an appropriate lifting attachment or suitable cradles or platforms are used.

(l) Post the storage areas with the name of the gases to be stored.

(m) Store cylinders away from ignitable substances such as gasoline or waste or combustibles in bulk including oil.

(n) Store cylinders upright and secure to prevent them from being knocked over.

(o) Secure cylinders when in use.

(4) Compressed gas cylinders, portable tanks, and cargo tanks must have pressure relief devices.

Stat. Auth.: ORS 654.025(2) and 656.726(4).
Stats. Implemented: ORS 654.001 through 654.295.
Hist: OR-OSHA Admin. Order 4-1998, f/8/28/98, ef. 10/1/98.

437-004-0715 Acetylene.

(1) Cylinders. The transfer, handling, storage, and use of acetylene in cylinders must comply with the general requirements of compressed gases.

(2) Piped systems. The piped systems for the transfer and distribution of acetylene must comply with the Compressed Gas Association Pamphlet G-1.3-1970.

Stat. Auth.: ORS 654.025(2) and 656.726(4).
Stats. Implemented: ORS 654.001 through 654.295.
Hist: OR-OSHA Admin. Order 4-1998, f/8/28/98, ef. 10/1/98.

437-004-0716 Oxygen.

(1) Scope. This applies to the installation of bulk oxygen systems on agricultural establishments.

(2) Bulk oxygen systems.

(a) Definition. A bulk oxygen system is an assembly of equipment, such as oxygen storage containers, pressure regulators, safety devices, vaporizers, manifolds, and interconnecting piping, with storage capacity more than 13,000 cubic feet of oxygen, Normal Temperature and Pressure (NTP), connected in service or ready for service, or more than 25,000 cubic feet of oxygen (NTP) including unconnected reserves on hand at the site. The bulk oxygen system ends where oxygen at service pressure first enters the supply line. The oxygen containers may be stationary or movable, and the oxygen may be gas or liquid.

(b) Location.

(A) General. Bulk oxygen storage systems must be aboveground, outdoors or in a noncombustible building, adequately vented and used exclusively for oxygen storage. Locate containers and associated equipment so there is no exposure to electric power lines, flammable or combustible liquid lines, or flammable gas lines.

(B) Accessibility. Locate the system so that it is readily accessible to mobile supply equipment at ground level and to authorized personnel.

(C) Leakage. For liquid oxygen storage, provide noncombustible surfacing in the area where any leakage might fall during operation of the system and filling of the container. Asphalt or bituminous paving is combustible.

(D) Elevation. When locating bulk oxygen systems near aboveground flammable or combustible liquid storage that may be either indoors or outdoors, it is advisable to locate the system on ground higher than the flammable or combustible liquid storage.

(E) Dikes. When a bulk oxygen system must be lower than adjacent flammable or combustible liquid storage, there must be suitable means (such as diking, diversion curbs, or grading) to prevent accumulation of liquids under the bulk oxygen system.

(c) Distance between systems and exposures.

(A) The minimum distance from any bulk oxygen storage container to exposures, measured in the most direct line except as in **(2)(c)(A)(v)** and **(vii)** below, must be as follows:

(i) Fifty feet from combustible structures.

(ii) Twenty-five feet from structures with fire-resistive exterior walls or sprinklered buildings of other construction, but not less than one-half the height of the adjacent side wall of the structure.

(iii) At least 10 feet from any opening in adjacent walls of fire resistive structures. Spacing from such structures must be adequate to permit maintenance, but not be less than 1-foot.

(iv) Flammable liquid storage aboveground.

Distance (feet)	Capacity (gallons)
50	0 to 1000
90	1001 or more

(v) Flammable liquid storage belowground.

Distance measured horizontally from oxygen storage container to flammable liquid tank (feet)	Distance from oxygen storage container to filling and vent connections or openings to flammable liquid tank (feet)	Capacity (Gallons)
15	50	0 to 1000
30	50	1001 or more

(vi) Combustible liquid storage aboveground.

Distance (feet)	Capacity (gallons)
25	0 to 1000
50	1001 or more

(vii) Combustible liquid storage belowground.

Distance measured horizontally from oxygen storage container to combustible liquid tank (feet)	Distance from oxygen storage container to filling and vent connections or openings to combustible liquid tank (feet)
15	50
30	50

(viii) Flammable gas storage. (Such as compressed flammable gases, liquefied flammable gases and flammable gases in low pressure gas holders.)

Distance (feet)	Capacity (cu. ft. NTP)
50	Less than 5000
90	5000 or more

(ix) Fifty feet from solid materials that burn rapidly, such as excelsior or paper.

(x) Twenty-five feet from solid materials that burn slowly, such as coal and heavy timber.

(xi) Seventy-five feet in one direction and 35 feet in approximately 90 degree direction from confining walls (not including firewalls less than 20 feet high) to provide adequate ventilation in courtyards and similar confining areas.

(xii) Twenty-five feet from areas such as offices, lunchrooms, locker rooms, time clock areas, and similar locations where people may gather.

(B) Exceptions. The distances in **(2)(c)(A)(i)**, **(ii)**, **(iv)** to **(x)** above, do not apply where there are protective structures, like firewalls, between the bulk oxygen storage installation and the exposure high enough to safeguard the oxygen storage systems. In those cases, the bulk oxygen storage installation may be a minimum distance of 1-foot from the firewall.

(d) Storage containers.

(A) Permanently installed containers must be on substantial noncombustible supports on firm noncombustible foundations.

(B) Make liquid oxygen storage containers from materials meeting the impact test requirements of paragraph UG-84 of ASME Boiler and Pressure Vessel Code, Section VIII – Unfired Pressure Vessels – 1968. Containers operating at pressures more than 15 pounds per square inch gage (p.s.i.g.) must comply with ASME Boiler and Pressure Vessel Code, Section VII – Unfired Pressure Vessels – 1968. Insulation on the liquid oxygen container must be noncombustible.

(C) High-pressure gaseous oxygen containers must comply with one of the following:

(i) ASME Boiler and Pressure Vessel Code, Section VIII – Unfired Pressure Vessels – 1968.

(ii) DOT Specifications and Regulations.

(e) Piping, tubing, and fittings.

(A) Piping, tubing, and fittings must be suitable for oxygen service and for the pressures and temperatures involved.

(B) Piping and tubing must conform to Section 2 – Gas and Air Piping Systems of Code for Pressure Piping, American National Standard (ANSI), B31.1-1967 with addenda B31.10a-1969.

(C) Fabricate piping or tubing for operating temperatures below 20 degrees F. from materials meeting the impact test requirements of paragraph UG-84 of ASME Boiler and Pressure Vessel Code, Section VIII – Unfired Pressure Vessels – 1968, when tested at the anticipated minimum operating temperature.

(f) Safety relief devices.

(A) Equip bulk oxygen storage containers, regardless of design pressure, with safety relief devices required by the ASME code or the DOT specifications and regulations.

(B) Bulk oxygen storage containers designed and constructed according to DOT specifications must have safety relief devices as required.

(C) Bulk oxygen storage containers that comply with the ASME Boiler and Pressure Vessel Code, Section VIII – Unfired Pressure Vessel – 1968 must have safety relief devices that comply with the Compressed Gas Association Pamphlet “Safety Relief Device Standards for Compressed Gas Storage Containers,” S-1, Part 3.

(D) Equip insulation casings on liquid oxygen containers with suitable safety relief devices.

(E) Safety relief devices must not allow moisture that would interfere with proper operation to collect and freeze.

(g) Liquid oxygen vaporizers.

(A) Anchor the vaporizer and use connecting piping sufficiently flexible to compensate for expansion and contraction due to temperature changes.

(B) Adequately protect the vaporizer and its piping on the oxygen and heating medium sections with safety relief devices.

(C) Heat used in an oxygen vaporizer must be indirectly supplied only through media such as steam, air, water or water solutions that do not react with oxygen.

(D) If electric heaters provide the primary source of heat, ground the vaporizing system.

(h) Equipment assembly and installation.

(A) Remove oil, grease or other readily oxidizable materials before placing the system in service.

(B) Make joints in piping and tubing by welding or by using flanged, threaded, slip, or compression fittings. Gaskets or thread sealants must be suitable for oxygen service.

(C) Valves, gages, regulators, and other accessories must be suitable for oxygen service.

(D) People familiar with proper practices must supervise the installation of bulk oxygen systems.

(E) After installation test and prove tight all field erected piping at maximum operating pressure. Use oil-free, non-flammable substances for testing.

(F) Protect storage containers, piping, valves, regulating equipment, and other accessories from physical damage and tampering.

(G) Adequately ventilate enclosures for oxygen control or operating equipment.

(H) The bulk oxygen storage location must have permanent placards that say: **"OXYGEN – NO SMOKING – NO OPEN FLAMES,"** or an equivalent warning.

(I) Bulk oxygen installations are not hazardous locations as defined and covered in Division 4/S. Therefore, general purpose or weatherproof types of electrical wiring and equipment are acceptable depending on whether the installation is indoors or outdoors. Install this equipment according to Division 4/S.

(i) For installations that require operation of equipment by the user, keep legible instructions by the equipment.

(j) Cut back or clear combustible growth 15 feet from any bulk oxygen storage container.

Stat. Auth.: ORS 654.025(2) and 656.726(4).
Stats. Implemented: ORS 654.001 through 654.295.
Hist: OR-OSHA Admin. Order 4-1998, f/8/28/98, ef. 10/1/98.

437-004-0717 Hydrogen.

Agricultural employers that use hydrogen in any part of their operation must comply with OAR 437-002-1910.103 in Subdivision 2/H.

For your convenience, this is the scope statement from that standard to help you know if your work falls under its jurisdiction.

(2) Scope

(i) Gaseous hydrogen systems.

(a) Paragraph (b) of this section applies to the installation of gaseous hydrogen systems on consumer premises where the hydrogen supply to the consumer premises originates outside the consumer premises and is delivered by mobile equipment.

(b) Paragraph (b) of this section does not apply to gaseous hydrogen systems having a total hydrogen content of less than 400 cubic feet, nor to hydrogen manufacturing plants or other establishments operated by the hydrogen supplier or his agent for the purpose of storing hydrogen and refilling portable containers, trailers, mobile supply trucks, or tank cars.

(ii) Liquefied hydrogen systems.

(a) Paragraph (c) of this section applies to the installation of liquefied hydrogen systems on consumer premises.

(b) Paragraph (c) of this section does not apply to liquefied hydrogen portable containers of less than 150 liters (39.63 gallons) capacity; nor to liquefied hydrogen manufacturing plants or other establishments operated by the hydrogen supplier or his agent for the sole purpose of storing liquefied hydrogen and refilling portable containers, trailers, mobile supply trucks, or tank cars.

Stat. Auth.: ORS 654.025(2) and 656.726(4).
Stats. Implemented: ORS 654.001 through 654.295.
Hist: OR-OSHA Admin. Order 4-1998, f. 8/28/98, ef. 10/1/98.

437-004-0720 Flammable Liquids.

(1) Definitions:

Approved – See Universal Definitions in 4/B, OAR 437-004-0100.

Closed container – A container sealed with a lid or other device that prevents the loss of liquid or vapor at ordinary temperatures.

Combustible – A substance or material that is able or likely to catch fire and burn.

Combustible liquids – See definition "Flammable liquids" below.

NOTE: When Oregon OSHA revised the Hazard Communication Standard to align with the Globally Harmonized System (GHS) of classification and labeling of chemicals, the term "combustible liquid" was eliminated. However, the term is still used by the National Fire Protection Association (NFPA) and by the Oregon State Fire Marshal. The NFPA system classifies some chemicals as "combustible liquids" that OSHA classifies as "flammable liquids."

Explosive – something capable of causing damage to the surroundings by chemical reaction. Also, see Universal Definition in 4/B, OAR 437-004-0100.

Flammable – something capable of being easily ignited, burning intensely, or having a rapid rate of flame spread. Also, see Universal Definitions in 4/B, OAR 437-004-0100.

Flammable liquids – Flammable liquids – are liquids having a flash point at or below 199.4 degrees F. (93 degrees C.) As defined in the globally harmonized system of classification and labeling (GHS) adopted in OSHA's Hazard Communication Standard, flammable liquids are divided into four categories as follows:

(A) Category 1 includes liquids that have a flashpoint below 73.4 degrees F. (23 degrees C.) and have a boiling point at or below 95 degrees F. (35 degrees C.)

(B) Category 2 includes liquids that have a flashpoint below 73.4 degrees F. (23 degrees C.) and have a boiling point above 95 degrees F. (35 degrees C.)

(C) Category 3 includes liquids that have a flashpoint in a temperature range from at or above 73.4 degrees F. (23 degrees C.) to at or below 140 degrees F. (60 degrees C.)

(D) Category 4 includes liquids that have a flashpoint in a temperature range from above 140 degrees F. (60 degrees C.) to at or below 199.4 degrees F. (93 degrees C.)

NOTE: See Appendix A to OAR 437-004-0720 Flammable Liquids for a comparison of the GHS/Hazard Communication classification system with the NFPA classification system. Examples of flammable liquids include:

Category 1: Diethyl ether (solvent used in some starting fluids)
Category 2: Gasoline, Benzene
Category 3: Kerosene, Stoddard Solvent
Category 4: Diesel fuel

Portable tank – A closed container with a liquid capacity more than 60 U.S. gallons (230 liters) and not intended for fixed installation.

Safety can – An approved closed container, of not more than 5 gallons (20 liters) capacity, with a spring-closing lid and spout cover, and designed so that it will safely relieve internal pressure when subjected to fire.

(2) Storage and transporting.

(a) The storage of flammable liquids in containers with a capacity of 60 gallons (230 liters) or more must be in fixed or portable tanks. Such tanks must meet the material and design requirements in NFPA 30, Flammable and Combustible Liquids Code, 1996 edition.

NOTE: Tanks meeting the requirements of a more recent edition of the NFPA 30 code will also be considered to be in compliance with this rule.

(b) Storage of flammable liquids in containers of less than 60 gallons (230 liters) capacity must be in one of the following listed in Table H-1:

Table H-1

Maximum Allowable Size of Portable Containers and Portable Tanks for Flammable Liquids

Container type	Category 1	Category 2	Category 3	Category 4
Safety cans or Approved containers used for petroleum fuels[1]	2 gal.	5 gal.	5 gal.	5 gal.
Glass, or plastic containers approved for use with flammable liquids[2] (other than "approved, containers used for petroleum fuels")	1 pint (pt.)	1 quart (qt.)	1 gallon (gal.)	1 gal.
DOT drums (Metal drums meeting Dept. of Transportation specifications)	60 gal.	60 gal.	60 gal.	60 gal.
Closed, metal containers (other than DOT drums)	1 gal.	5 gal.	5 gal.	5 gal.
Approved, portable tanks	660 gal.	660 gal.	660 gal.	660 gal.

NOTES:

[1]Approved containers used for petroleum fuels – metal or plastic containers that bear an approval label stamped on or molded into the container; meeting the requirements of and used for petroleum products within the scope of one or more of the standards specified as an acceptable container in NFPA 30, 1996 (or a more recent edition.)

[2]The "Glass or plastic containers approved for use with flammable liquids" container size limits in Table H-1 do not apply to medicines, beverages, foodstuffs, cosmetics, and other common consumer items when they are packaged subject to consumer product safety standards or other accepted practices.

(c) Store flammable liquids in a manner that will not obstruct, impede, or limit use of exits, stairways, or areas normally used for safe exit routes.

(d) Flammable liquids transported in passenger-type vehicles (cars, trucks, buses, carry-alls, crew transporters, etc.) must be in safety cans, or approved containers used for petroleum fuels. Carry these containers outside the passenger compartment, secured in a ventilated area that prevents the accumulation of flammable or explosive vapors, and that protects against rupture in a collision.

(3) Tanks and containers.

(a) Clearly mark tanks and containers as required in the Hazard Communication Standard, OAR 437-004-9800(5) Labels and other Forms of Warning. Mark fill-risers and pumps or discharge devices with the name of the product they contain.

NOTE: Division 4/L, 437-004-1440 requires employers to post signs reading, "No Smoking or Open Flame" (or "FLAMMABLE – KEEP FIRE AWAY") in areas used for fueling, and where flammable liquids are received, dispensed, used, or stored.

(b) Protect pumps, containers, tanks, and supports for tanks used for combustible or flammable liquids against collision damage.

(c) Mount aboveground tanks on supports that are strong and stable enough to safely support the load. Provide enough clearance to permit inspection and maintenance as well as clearance from the ground.

(4) Tanks elevated for gravity discharge.

(a) The gravity discharge outlet must have an approved hose with a self-closing valve at the discharge end.

(b) The bottom opening for gravity discharge must have a shut-off valve adjacent to the tank shell that can be closed manually. Underground tanks from which fuel flows under gravity must have a manual shut-off valve between the tank and the hose.

(5) Tanks with top openings only.

(a) Tanks with all openings in the top must have a firmly attached, approved pumping device and an approved hose.

(b) Do not use siphons and discharge devices requiring pressure in the container.

(c) There must be an effective anti-siphoning device in the pump discharge; tank plumbing must not permit fuel to siphon or flow from the tank when the pump is not operating, even though discharge nozzle valves or line valves are open.

(6) Dispensing and fueling.

(a) Maintain pumping devices or faucets used to dispense flammable liquids so they do not leak enough material to puddle or cause a fire hazard.

(b) Fuel tanks and pumps from which flammable liquids are dispensed must have an approved hose long enough to fill containers.

(A) Hoses must have a metal nozzle at the discharge end.

(B) Hoses must incorporate an effective electrical interconnect between the nozzle and the supply tank.

(c) Do not dispense flammable liquids into or from portable or stationary metal tanks or drums unless there is an effective electrical interconnect (bond) between the source and the receiving containers.

NOTES:

The electrical interconnect may be made by assuring that the metal nozzle of the approved hose is in contact with the metal fill neck or bung of the receiving container during filling.

Both portable metal and portable plastic containers should be placed on a grounded surface when filling.

(d) Shut off internal combustion engines, except diesel engines, while refueling.

(7) Handling and use of flammable liquids.

(a) Control leakage or the escape of flammable liquids and use measures to prevent accidental spills. If a spill occurs, promptly clean any soaked or contaminated areas.

NOTE: If you have a release or spill of any hazardous substance at your workplace and you expect your employees to help clean it up, other rules may apply:

Division 4/Z, 437-004-9800, Hazard Communication Standard for Agricultural Employers.

Division 4/H, 437-004-0950 Hazardous Waste Operations and Emergency Response.

(b) Use flammable liquids, including gasoline, only where there is no open flame or other source of ignition within 50 feet of the operation, or within the possible path of vapor travel.

NOTES:
This rule does not prohibit the refueling of orchard heaters used outdoors while adjacent heaters are burning; or the field (outdoor) refueling of portable tools while other tools are in operation.

Division 4/L, 437-004-1430 requires employers to forbid smoking, open flames, the use of spark-producing devices or tools, and other sources of fire or ignition in fueling areas; where fuel systems for internal combustion engines are serviced; and where flammable liquids are received, dispensed, used, or stored.

(c) Do not use flammable liquids, including gasoline, indoors as a solvent or for cleaning purposes unless there is adequate ventilation to bring and keep the concentrations of explosive vapors in the atmosphere below 20 percent of its lower explosive limit (LEL).

(d) Keep flammable liquids, including gasoline, in closed containers when not in use.

(8) Heating devices that use flammable liquids.

NOTE: The Oregon State Mechanical Specialty Code and the Oregon Fire Code have standards for space-heating devices and associated equipment.

(a) Set heaters, when in use, on a stable, level base; or mount them as specified by the manufacturer.

(b) Heaters not suitable for use on wood floors must rest on heat insulating material of at least 1-inch concrete, or equivalent. The insulating material must extend beyond the heater 2 feet or more in all directions.

(c) Locate heaters used near combustible tarpaulins, canvas, or similar coverings at least 10 feet from the coverings and securely fasten them to prevent ignition or upsetting of the heater due to wind action on the covering or other material.

(d) Liquid-fired heaters must have a primary safety control to stop the flow of fuel in the event of flame failure.

NOTE: Barometric or gravity oil feed is not a primary safety control.

(e) Do not use heating devices without built-in means to effectively control the fuel supply and the flame in occupied buildings.

(f) Vent heating devices (that use flammable fuels inside occupied buildings) to the outside atmosphere except when:

(A) The heating device has an “approval label” issued by the American Gas Association or a nationally recognized testing laboratory indicating it is approved for use as an unvented heater in occupied buildings; or,

(B) Prior to entry, test the atmosphere inside buildings where unvented heating devices are in use to assure it is free of hazardous levels of carbon monoxide.

(g) Fuel-burning devices must have means that prevent the emission of sparks or other sources of ignition.

(9) Design, construction, and capacity of storage cabinets.

(a) Maximum capacity. Maximum capacity. Do not store more than 60 gallons of Category 1, 2, or 3 flammable liquids, or more than 120 gallons of Category 4 flammable liquids in a storage cabinet.

(b) Fire resistance. Storage cabinets must meet NFPA 30, 1996 edition standards. Label storage cabinets with **“No Smoking or Open Flame.”**

NOTES:
Storage cabinets meeting the requirements of a more recent edition of the NFPA 30 code will also be considered to be in compliance with this rule.
Storage cabinets labeled “FLAMMABLE – KEEP FIRE AWAY” are also in compliance with this rule.

(10) Design and construction of inside storage rooms.

(a) Construction.

(A) Construct inside storage rooms to meet the required fire-resistive rating in NFPA 30, 1996 edition.

(B) Such construction must comply with the test specifications in Standard Methods of Fire Tests of Building Construction and Materials, NFPA 251, 1969 edition.

(C) Where there is an automatic sprinkler system, design and install the system according to accepted engineering practices.

(D) Openings to other rooms or buildings must have noncombustible, liquid-tight, raised sills or ramps at least 4 inches high, or the floor in the storage area must be at least 4 inches below the surrounding floors. A permissible alternate to the sill or ramp is an open-grated trench inside the room that drains to a safe location.

(E) Openings must have approved self-closing fire doors. The room must be liquid-tight where the walls join the floor.

(F) Where other parts of the building or other properties are exposed, protect windows as required in the Standard for Fire Doors and Windows, NFPA 80, 1968 edition, for Class E or F openings.

(G) Wood at least 1-inch nominal thickness is acceptable for shelving, racks, dunnage, scuffboards, floor overlay, and similar installations.

NOTES: The following will also be considered to be in compliance with this rule:
Inside storage rooms meeting the requirements of a more recent edition of the NFPA 30 code.

Construction materials meeting the specifications in a more recent edition of NFPA 251 code.

Windows and openings protected as required by a more recent edition of the NFPA 80 code.

(b) Rating and capacity. Storage in inside storage rooms must comply with Table H-2, below.

Table H-2 – Storage In Inside Rooms

Fire protection[1] provided	Fire resistance	Maximum room size	Total Allowable quantities (gals/sq. ft./floor area)
Yes	2 hours	500 sq. ft.	10
No	2 hours	500 sq. ft.	5
Yes	1-hour	150 sq. ft	4
No	1-hour	150 sq. ft	2

[1] Fire protection system must have sprinklers, water spray, carbon dioxide, or other system.

NOTES:

Division 4/L, 437-004-1430 Sources of Fire requires that electric lights, equipment, and wiring used where there may be flammable or explosive gases or vapors must comply with the State Electrical Specialty Code.

Division 4/S, 437-004-3075 Agricultural Buildings with Special Hazards has additional electrical requirements.

Stat. Auth.: ORS 654.025(2) and 656.726(4).
Stats. Implemented: ORS 654.001 through 654.295.
Hist: OR-OSHA Admin. Order 4-1998, f/8/28/98, ef. 10/1/98.
OR-OSHA Admin. Order 3-2014, f. 8/8/14, ef. 8/8/14.

Appendix A to OAR 437-004-0720 Flammable Liquids (Nonmandatory)

A comparison of the Globally Harmonized System (GHS) of classification for Flammable Liquids and the National Fire Protection Association (NFPA) system of classification for Flammable and Combustible Liquids:

GHS Classification And Category	Flash Point *(Boiling Point)*	NFPA Classification	NFPA Term	Flash Point *(Boiling Point)*	Examples
Flammable Liquid Category 1	Below 73.4°F *(At or below 95°F)*	Class IA	Flammable Liquid	Below 73°F *(Below 100°F)*	Diethyl ether (solvent used in some starting fluids)
Flammable Liquid Category 2	Below 73.4°F *(Above 95°F)*	Class IB	Flammable Liquid	Below 73°F *(At or above 100°F)*	Gasoline, toluene, benzene, acetone, ethanol
Flammable Liquid Category 3	Between 73.4°F and 140°F	Class IC	Flammable Liquid	At or above 73°F *(Below 100°F)*	Kerosene; m-, o-, p-xylene
		Class II	Combustible Liquid	At or above 100°F	Stoddard solvent, hydrazine
Flammable Liquid Category 4	Above 140°F but not more than 199.4°F	Class IIIA	Combustible Liquid	At or above 140°F	Diesel fuel, naphthalene
Not a flammable liquid if Flash Point is greater than 199.4°F.		Class IIIB	Combustible Liquid	At or above 200°F	Glycerin (mist)

Stat. Auth.: ORS 654.025(2) and 656.726(4).
Stats. Implemented: ORS 654.001 through 654.295.
Hist: OR-OSHA Admin. Order 3-2014, f. 8/8/14, ef. 8/8/14.

437-004-0725 Spray Finishing.

If you use a spray booth or a spray room or do production-level spray finishing, you must follow the rules in Division 2/H, OAR 437-002-0107, Spray Finishing.

NOTE: The Spray Finishing rules do not apply to outdoor spray applications to buildings, tanks, or other similar structures; or to small, portable, spray apparatus that is not used repeatedly in the same location.

Stat. Auth.: ORS 654.025(2) and 656.726(4).
Stats. Implemented: ORS 654.001 through 654.295.
Hist: OR-OSHA Admin. Order 4-1998, f/8/28/98, ef. 10/1/98.
OR-OSHA Admin. Order 3-2014, f. 8/8/14, ef. 8/8/14.

437-004-0770 Explosives and Blasting Agents.

Agricultural employers that use explosives and blasting agents must comply with OAR 437-002-1910.109 in Subdivision 2/H.

For your convenience, this is the scope statement from that standard to help you know if your work falls under its jurisdiction.

> This section applies to the manufacture, keeping, storage, sale, transportation, and use of explosives, blasting agents, and pyrotechnics. The section does not apply to the sale and use (public display) of pyrotechnics, commonly known as fireworks, nor the use of explosives in the form prescribed by the official U.S. Pharmacopeia.

Stat. Auth.: ORS 654.025(2) and 656.726(4).
Stats. Implemented: ORS 654.001 through 654.295.
Hist: OR-OSHA Admin. Order 4-1998, f/8/28/98, ef. 10/1/98.

437-004-0780 Storage and Handling of Liquefied Petroleum Gases.

NOTE: OAR 437-004-0790, following this rule, covers the use of LPG and natural gas in fields and orchards. This rule (0780) does not cover those applications.

(1) Definitions.

API-ASME container – A container built to comply with **OAR 437-004-0780(3)(b)(C)**.

ASME container – A container built to comply with **OAR 437-004-0780(3)(b)(A)**.

Approved – See universal definition in 4/B.

Container assembly – An assembly of the container and fittings for all container openings, including shutoff valves, excess flow valves, liquid-level gaging devices, safety relief devices, and protective housing.

Containers – All vessels, such as tanks, cylinders, or drums, used to transport or store liquefied petroleum gases.

DOT – Department of Transportation.

DOT container – A container built to comply with 49 CFR Chapter 1.

DOT cylinders – cylinders meeting the requirements of 49 CFR Chapter I.

DOT Specifications – regulations of the Department of Transportation published in 49 CFR Chapter I.

Liquefied petroleum gases – "LPG" and "LP-Gas" – Any material made mostly of any of the following hydrocarbons, or mixtures of them; propane, propylene, butane (normal butane or iso-butane), and butylenes.

Listed – see universal definition in 4/B.

Movable fuel storage tenders or farm carts – Containers not more than 1,200 gallons water capacity, with wheels for towing. They are not highway vehicles, but may occasionally be moved on public roads or highways. They are a fuel supply vehicle.

P.S.I.A. – pounds per square inch absolute.

P.S.I.G. – pounds per square inch gauge.

Systems – an assembly of the container or containers, major devices such as vaporizers, safety relief valves, excess flow valves, regulators, and connecting piping.

Vaporizer-burner – an integral vaporizer-burner unit, dependent on the heat generated by the burner as the source of heat to vaporize the liquid used for dehydrators or dryers.

Ventilation, adequate – when specified for the prevention of fire during normal operation, ventilation is adequate when the concentration of the gas in a gas-air mixture does not exceed 25 percent of the lower flammable limit.

(2) Scope.

(a) Application.

(A) Paragraph **OAR 437-004-0780(3)** applies to installations made according to **OAR 437-004-0780(4)**, **(5)**, **(6)** and **(8)**, except as noted in each of those paragraphs.

(B) Paragraphs **OAR 437-004-0780(4)** through **(8)** have their own application statements.

(b) Exclusions. This section does **not** apply to:

(A) LP-Gas refrigerated storage systems;

(B) LP-Gas used with oxygen. The requirements of OAR 437-004-2310 apply to that use;

(C) Low-pressure (not more than 1/2-pound per square inch or 14 inches water column) LP-Gas piping systems, and the installation and operation of residential and commercial appliances including their inlet connections, supplied through such systems. For those systems, the National Fire Protection Association Standard for the Installation of Gas Appliances and Gas Piping, NFPA 54-1996 apply.

(c) Retroactivity. Unless otherwise stated, this section is not retroactive.

(A) Existing plants, appliances, equipment, buildings, structures, and installations for the storage, handling or use of LP-Gas, that met the National Fire Protection Association Standard for the Storage and Handling of Liquefied Petroleum Gases NFPA No. 58, 1995, at the time of manufacture or installation are acceptable, if their use does not cause a recognized hazard to employees.

(3) Basic rules.

(a) Approval of equipment and systems.

(A) Each system using DOT containers according to 49 CFR Part 178 must use approved container valves, connectors, manifold valve assemblies, and regulators.

(B) Each system for domestic or commercial use with containers of 2,000 gallons or less water capacity, other than those built according to 49 CFR Part 178, must have a container assembly and one or more regulators, and may include other parts. The system as a unit or the container assembly as a unit, and the regulator or regulators, must be individually listed.

(C) In systems using containers of more then 2,000 gallons water capacity, each regulator, container valve, excess flow valve, gaging device, and relief valve installed on or at the container, must be listed by a nationally recognized testing laboratory. Refer to 29 CFR 1910.7 for the definition of nationally recognized testing laboratory.

(b) Requirements for construction and original test of containers.

(A) Containers used with systems in **OAR 437-004-0780(5)**, **(6)** and **(8)**, except in **(6)(c)(C)**, must comply with the Rules for Construction of Unfired Pressure Vessels, section VIII, Division 1, American Society of Mechanical Engineers (ASME) Boiler and Pressure Vessel Code, 1968 edition.

(B) Containers constructed according to the 1949 and earlier editions of the ASME Code do not have to comply with paragraphs U-2 through U-10 and U-19 of it. Do not use containers constructed according to paragraph U-70 in the 1949 and earlier editions.

(C) Containers designed, constructed, and tested before July 1, 1961, according to the Code for Unfired Pressure Vessels for Petroleum Liquids and Gases, 1951 edition with 1954 Addenda, of the American Petroleum Institute and the American Society of Mechanical Engineers are acceptable. Containers constructed according to API-ASME Code do not have to comply with section I or with appendix to section I. Paragraphs W-601 to W-606 inclusive in the 1943 and earlier editions do not apply.

(D) Paragraph **(3)(b)(A)** above does not prohibit the use or reinstallation of containers constructed and maintained according to the standard for the Storage and Handling of Liquefied Petroleum Gases NFPA No. 58 in effect at the time of fabrication.

(E) Containers used with systems covered in **OAR 437-004-0780(3)**, **(5)(c)(C)**, and **(7)**, must comply with DOT specifications effective at the date of their manufacture.

(c) Welding of containers.

(A) Welding to the shell, head, or any other part of the container subject to internal pressure, must comply with the code under which the tank was built. Other welding is permitted only on saddle plates, lugs, or brackets attached to the container by the tank manufacturer.

(B) Welding of DOT containers, must be done by a qualified manufacturer making containers of the same type, and must comply with DOT regulations.

(d) Markings on containers.

(A) Each container in **(3)(b)(A)** above, except as in **(3)(b)(D)** above must have these markings:

(i) A mark identifying compliance with, and other markings required by, the rules of the reference under which the container is constructed; or with the stamp and other markings required by the National Board of Boiler and Pressure Vessel Inspectors.

(ii) Notation as to whether the container is designed for underground or aboveground installation or both. If intended for both and different style hoods are provided, the marking must indicate the proper hood for each type of installation.

(iii) The name and address of the supplier of the container, or with the trade name of the container.

(iv) The water capacity of the container in pounds or gallons, U.S. Standard.

(v) The pressure in p.s.i.g., for which the container is designed.

(vi) The wording “This container must not contain a product with a vapor pressure in excess of – p.s.i.g. at 100 degrees F.,” see (m)(G).

(vii) The tare weight in pounds or other identified unit of weight for containers with a water capacity of 300 pounds or less.

(viii) Marking indicating the maximum level to which the container may be filled with liquid at temperatures between 20 degrees F. and 130 degrees F., except on containers provided with fixed maximum level indicators or which are filled by weighing. Markings must be increments of not more than 20 degrees F. This marking may be located on the liquid level gaging device.

(ix) The outside surface area in square feet.

(B) Marks must be on a metal nameplate attached to the container and visible after installation of the container.

(C) When storing or using LP-Gas and one or more other gases in the same area, the containers must identify their content.

(e) Location of containers and regulating equipment.

(A) Containers, and first stage regulating equipment if used, must be outside buildings, except under one or more of the following:

(i) In buildings used exclusively for container charging, vaporization pressure reduction, gas mixing, gas manufacturing, or distribution.

(ii) For portable use according to **OAR 437-004-0780(4)(e)**.

(iii) LP-Gas fueled engines according to **OAR 437-004-0780(6)(j)** or **(k)**.

(iv) LP-Gas fueled industrial trucks used according to **OAR 437-004-0780(6)(l)**.

(v) LP-Gas fueled vehicles garaged according to **OAR 437-004-0780(6)(m)**.

(vi) Containers awaiting use or resale when stored according to **OAR 437-004-0780(7)**.

(B) Place individual containers with respect to the nearest building or group of buildings according to Table 1.

Table 1

Water capacity per container	Minimum distances		
	Containers		Between above-ground containers
	Underground	Aboveground	
Less than 125 gals[1]	10 feet	None	None
125 to 250 gals	10 feet	10 feet	None
251 to 500 gals	10 feet	10 feet	3 feet
501 to 2,000 gals	25 feet[2]	25 feet[2]	3 feet
2,001 to 30,000 gals	50 feet	50 feet	5 feet
30,001 to 70,000 gals	50 feet	75 feet[3]	
70,001 to 90,000 gals	50 feet	100 feet[3]	

[1] If the aggregate water capacity of a multi-container installation at a consumer site is 501 gallons or more, the minimum distance must comply with this table, applying the aggregate capacity rather than the capacity per container. If doing more than one installation, separate each from another by at least 25 feet. Do not apply the MINIMUM DISTANCES BETWEEN ABOVEGROUND CONTAINERS to such installations.
[2] You can reduce the above distance requirements to not less than 10 feet for a single container of 1,200 gallons water capacity or less, if it is at least 25 feet from any other LP-Gas container of more than 125 gallons water capacity.
[3] 1/4 of sum of diameters of adjacent containers.

(C) Do not stack containers on each other during use.

(D) Keep easily ignitible material such as weeds and long dry grass 10 feet away from containers.

(E) Keep at least 20 feet between liquefied petroleum gas containers and flammable liquid tanks. The minimum separation between a container and the centerline of the dike is 10 feet. This does not apply when LP-Gas containers of 125 gallons or less capacity are next to Class III flammable liquid tanks of 275 gallons or less capacity.

(F) Prevent the accumulation of flammable liquids under adjacent liquefied petroleum gas containers by diking, diversion curbs, grading or the equivalent.

(G) Do not put liquefied petroleum gas containers within the dikes around flammable liquid tanks.

(f) Container valves and container accessories.

(A) Valves, fittings, and accessories connected directly to the container including primary shutoff valves, must have a rated working pressure of at least 250 p.s.i.g. and be suitable for LP-Gas service. Do not use cast iron. This does not prohibit the use of container valves made of malleable or nodular iron.

(B) Connections to containers, except safety relief connections, liquid level gaging devices, and plugged openings, must have shutoff valves as close to the container as practicable.

(C) Excess flow valves, must close automatically at the rated flows of vapor or liquid as specified by the manufacturer. The connections or line including valves, fittings, etc., being protected by an excess flow valve must have a greater capacity than the rated flow of the excess flow valve.

(D) Liquid level gaging devices do not need excess flow valves if their outward flow is less than would pass through a .055-inch opening.

(E) Openings from the container or through fittings attached directly to it with a pressure gauge connected do not need shutoff or excess flow valves if they are not larger than .055-inch.

(F) Except as in **OAR 437-004-0780(4)(e)(A)(ii)**, excess flow and back pressure check valves required here must be inside the container or at an outside point where the line enters the container. In the latter case, make installation so that strain beyond the excess flow or back pressure check valve will not cause a break between the container and the valve.

(G) Excess flow valves must have a bypass, not to exceed a .040-inch opening to allow equalization of pressures.

(H) Containers with water capacity between 30 gallons and 2,000 gallons, filled by volume and made after December 1, 1963, must fill into the vapor space.

(g) Piping – including pipe, tubing, and fittings.

(A) Pipe, except as in **OAR 437-004-0780(6)(f)(A)**, must be wrought iron or steel (black or galvanized), brass, copper, or aluminum alloy. Aluminum alloy pipe must be at least Schedule 40. Do not use alloy 5456. Protect aluminum alloy pipe against external corrosion when it contacts dissimilar metals other than galvanized steel. Also protect it when it is subject to repeated wetting by such liquids as water (except rainwater), detergents, sewage, or leaking from other piping, or it passes through flooring, plaster, masonry, or insulation. Galvanized sheet steel or pipe, galvanized inside and out, is good protection. The maximum nominal pipe size for aluminum pipe is 3/4-inch. Limit pressures to less than 20 p.s.i.g. Do not install aluminum alloy pipe within 6 inches of the ground.

(i) Vapor piping with operating pressures not more than 125 p.s.i.g. must be suitable for a working pressure of at least 125 p.s.i.g. It must be at least Schedule 40 (ASTM A-53-69, Grade B Electric Resistance Welded and Electric Flash Welded Pipe or equal).

(ii) Vapor piping with operating pressures more than 125 p.s.i.g. and all liquid piping must be suitable for a working pressure of at least 250 p.s.i.g. It must be at least Schedule 80 if it has threaded or threaded and back welded joints. It must be at least Schedule 40 (ASTM A-53-69 Grade B Electric Resistance Welded and Electric Flash Welded Pipe or equal) if it has welded, or welded and flanged joints.

(B) Tubing must be seamless and of copper, brass, steel, or aluminum alloy. Copper tubing must be type K or L or equivalent as covered in the Specification for Seamless Copper Water Tube, ANSI H23.1-1970 (ASTM B88-69). Aluminum alloy tubing must be Type A or B or equivalent as in Specification ASTM B210-68. It must have markings every 18 inches indicating compliance with ASTM Specifications. The minimum nominal wall thickness of copper tubing and aluminum alloy tubing is in Table 2 and Table 3.

Protect aluminum alloy tubing against external corrosion when it contacts dissimilar metals other than galvanized steel. Also protect it when it is subject to repeated wetting by liquids such as water (except rainwater), detergents, sewage, or leakage from other piping, or it passes through flooring, plaster, masonry, or insulation. Galvanized sheet steel or pipe, galvanized inside and out, is good protection. The maximum outside diameter for aluminum alloy tubing is 3/4-inch. Limit pressures to less than 20 p.s.i.g. Do not install aluminum alloy pipe within 6 inches of the ground.

Table 2 - Wall Thickness of Copper Tubing [1]

Standard size (inches)	Nominal outside diameter (inches)	Nominal wall thickness (inches)	
		Type K	Type L
1/4	0.375	0.035	0.030
3/8	0.500	0.049	0.035
1/2	0.625	0.049	0.040
5/8	0.750	0.049	0.042
3/4	0.875	0.065	0.045
1	1.125	0.065	0.050
1 1/4	1.375	0.065	0.055
1 1/2	1.625	0.072	0.060
2	2.125	0.083	0.070

[1] Based on data in Specification for Seamless Copper Water Tube, ANSI H23.1-1970 (ASTM B-88-69).

NOTE: The standard size to designate tubing is 1/8-inch smaller than its nominal outside diameter.

Table 3 - Wall Thickness of Aluminum Alloy Tubing [1]

Outside diameter (inches)	Nominal wall thickness (inches)	
	Type A	Type B
3/8	0.035	0.049
1/2	0.035	0.049
5/8	0.042	0.049
3/4	0.049	0.058

[1] Based on data in Standard Specification for Aluminum-Alloy Drawn Seamless Coiled Tubes for Special Purpose Applications, ASTM B210-68.

(C) Pipe joints may be screwed, flanged, welded, soldered, or brazed with a material with a melting point more than 1,000 degrees F. Joints on seamless copper, brass, steel, or aluminum alloy gas tubing must be made with approved gas tubing fittings, or soldered or brazed with a material having a melting point more than 1,000 degrees F.

(D) For operating pressures of 125 p.s.i.g. or less, fittings must withstand a pressure of at least 125 p.s.i.g. For operating pressures above 125 p.s.i.g., fittings withstand a minimum of 250 p.s.i.g.

(E) You may not use threaded cast iron pipe fittings such as ells, tees, crosses, couplings, and unions. Use aluminum alloy fittings with aluminum alloy pipe and tubing. Use insulated fittings where aluminum alloy pipe or tubing connects with a dissimilar metal.

(F) Strainers, regulators, meters, compressors, pumps, etc., are not pipe fittings. This does not prohibit the use of malleable, nodular, or higher strength gray iron for such equipment.

(G) All materials such as valve seats, packing, gaskets, diaphragms, etc., must be resistant to the action of liquefied petroleum gas.

(H) After assembly, test all piping, tubing, or hose at not less than normal operating pressures. After installation, test piping and tubing with a manometer or similar tester that shows a pressure drop. There must be no leaks. Do not test with a flame.

(I) Use flexible connections to compensate for expansion, contraction, jarring, vibration, and settling.

(J) Piping outside buildings may be buried, aboveground, or both. It must have good support and protection against physical damage. Where soil conditions warrant, protect piping against corrosion. Where condensation may occur, the piping must pitch back to the container, or there must be another way to change the condensate back to a vapor.

(h) Hose specifications.

(A) Hose must be made of materials that are resistant to the action of LP-Gas. If the hose has wire braid reinforcing, it must be corrosion-resistant.

(B) Mark hose for container pressure “LP-Gas” or “LPG” at least every 10 feet.

(C) Hose for container pressure must have a bursting pressure rating of not less than 1,250 p.s.i.g.

(D) Hose for container pressure must be listed (see definitions in subdivision B).

(E) Hose connections for container pressure must withstand, without leaks, a test pressure of at least 500 p.s.i.g.

(F) Hose and hose connections on the low-pressure side of the regulator or reducing valve must have a bursting pressure rating of not less than 125 p.s.i.g. or five times the set pressure of the relief devices protecting that portion of the system, whichever is higher.

(G) Hose is acceptable on the low-pressure side of regulators to connect to other than domestic and commercial gas appliances if:

(i) The appliances connected with a hose are portable and need a flexible connection.

(ii) For use inside buildings the hose must be of minimum practical length, but not more than 6 feet except as in **OAR 437-004-0780(4)(e)(A)(vii)**. It may not extend from one room to another, nor pass through any walls, partitions, ceilings, or floors. Such hose must be in view and not concealed. Outside buildings, the hose may be longer but must be as short as practical.

(iii) Use only approved hose. Do not use it where temperatures are likely to be more than 125 degrees F. Securely connect the hose to the appliance and do not use rubber slip ends.

(iv) The shutoff valve for an appliance connected by hose must be in the metal pipe or tubing and not at the appliance end of the hose. When shutoff valves are installed close to each other, take precautions to prevent operation of the wrong valve.

(v) Protect hose connected to wall outlets from physical damage.

(i) Safety devices.

(A) Every container except those meeting DOT specifications and every vaporizer (except motor fuel vaporizers and except vaporizers in **OAR 437-004-0780(3)(j)(B)(iii)** and **(5)(d)(E)(i)**) whether heated by artificial means or not, must have one or more spring loaded safety relief valves. These valves must allow free venting to the outer air with discharge not less than 5 feet horizontally away from any opening into nearby buildings. The rate of discharge must meet the requirements of **(3)(i)(B)** or **(3)(i)(C)** below for vaporizers.

(B) The minimum rate of discharge in cubic feet per minute of air at 120 percent of the maximum permitted start to discharge pressure for safety relief valves on containers other than DOT containers must be as follows:

Surface area (sq. ft.)	Flow rate CFM air	Surface area (sq. ft.)	Flow rate CFM air	Surface area (sq. ft.)	Flow rate CFM air
20 or less	626	170	3,620	600	10,170
25	751	175	3,700	650	10,860
30	872	180	3,790	700	11,550
35	990	185	3,880	750	12,220
40	1,100	190	3,960	800	12,880
45	1,220	195	4,050	850	13,540
50	1,330	200	4,130	900	14,190
55	1,430	210	4,300	950	14,830
60	1,540	220	4,470	1,000	15,470
65	1,640	230	4,630	1,050	16,100
70	1,750	240	4,800	1,100	16,720
75	1,850	250	4,960	1,150	17,350
80	1,950	260	5,130	1,200	17,960
85	2,050	270	5,290	1,250	18,570
90	2,150	280	5,450	1,300	19,180
95	2,240	290	5,610	1,350	19,780
100	2,340	300	5,760	1,400	20,380
105	2,440	310	5,920	1,450	20,980
110	2,530	320	6,080	1,500	21,570
115	2,630	330	6,230	1,550	22,160
120	2,720	340	6,390	1,600	22,740
125	2,810	350	6,540	1,650	23,320
130	2,900	360	6,690	1,700	23,900
135	2,990	370	6,840	1,750	24,470
140	3,080	380	7,000	1,800	25,050
145	3,170	390	7,150	1,850	25,620
150	3,260	400	7,300	1,900	26,180
155	3,350	450	8,040	1,950	26,750
160	3,440	500	8,760	2,000	27,310
165	3,530	550	9,470		

Surface area = total outside surface area of the container in square feet.

When the surface area is not on the nameplate or when the marking is not legible, calculate the area using one of the following formulas:

(1) Cylindrical container with hemispherical heads:

Area = Overall length X outside diameter X 3.1416.

(2) A cylindrical container with other than hemispherical heads:

Area = (Overall length + 0.3 outside diameter) X outside diameter X 3.1416.

NOTE: This formula is not exact, but will give results within the limits of practical accuracy for the sole purpose of sizing relief valves.

(3) Spherical container:

Area = Outside diameter squared X 3.1416.

Flow Rate – CFM Air = required flow capacity in cubic feet per minute of air at standard conditions, 60 degrees F. and atmospheric pressure (14.7 p.s.i.a.).

The rate of discharge may be interpolated for intermediate values of surface area. For containers with total outside surface area greater than 2,000 square feet, calculate the required flow rate using the formula, Flow Rate – CFM Air = 53.632 A0.82.

A = total outside surface area of the container in square feet.

Valves not marked "Air" have flow rate marking in cubic feet per minute of liquefied petroleum gas. Convert these to ratings in cubic feet per minute of air by multiplying the liquefied petroleum gas ratings by factors listed below. Convert air flow ratings to ratings in cubic feet per minute of liquefied petroleum gas by dividing the air ratings by the factors listed below.

Air Conversion Factors

Container type	100	125	150	175	200
Air conversion factor	1.162	1.142	1.113	1.078	1.010

(C) Minimum Required Rate of Discharge for Safety Relief Valves for Liquefied Petroleum Gas Vaporizers (Steam Heated, Water Heated, and Direct Fired).

Determine the minimum required rate of discharge for safety relief valves as follows:

(i) Obtain the total surface area by adding the surface area of the vaporizer shell in square feet directly in contact with LP-Gas and the heat exchanged surface area in square feet directly in contact with LP-Gas.

(ii) Obtain the minimum required rate of discharge in cubic feet of air per minute, at 60 degrees F. and 14.7 p.s.i.a. from **(3)(i)(B)** above, for this total surface area.

(D) Container and vaporizer safety relief valves must be set to start-to-discharge, with relation to the design pressure of the container, according to Table 4.

(E) Safety relief devices used with systems having other than DOT containers must discharge at not less than the rates in **(3)(i)(B)** above, before the pressure is more than 120 percent of the maximum (not including the 10 percent in **(3)(i)(D)** above) permitted start to discharge pressure setting of the device.

Table 4

Containers	Minimum (percent)	Maximum (percent)
ASME Code; Par. U-68, U-69 – 1949 and earlier editions	110 [1]	25
ASME Code; Par. U-200, U-201 – 1949 editions	88 [1]	100
ASME Code – 1950, 1952, 1956, 1959, 1962, 1965 and 1968 (Division I) editions	88 [1]	100
API-ASME Code – all editions	88 [1]	100
DOT – As prescribed in 49 CFR Chapter I		

[1] Manufacturers of safety relief valves are allowed a plus tolerance not more than 10 percent of the set pressure marked on the valve.

(F) Some places have continuous high temperatures that require storage of a lower vapor pressure product or the use of a higher designed pressure vessel to prevent the safety valves opening. As an alternative use cooling devices like sprayers, shade or other methods.

(G) Place safety relief valves to discourage tampering. If pressure setting or adjustment is external, the relief valves must have approved means for sealing adjustment.

(H) Shutoff valves must not be between the safety relief devices and the container, or the equipment or piping to which the safety relief device is connected unless there is full required capacity flow through the safety relief device.

(I) Safety relief valves must have direct communication with the vapor space of the container at all times.

(J) Mark each container safety relief valve used with systems covered by **OAR 437-004-0780(5)**, **(6)**, and **(8)**, except as in **(6)(c)(C)** as follows:

(i) "Container Type" of the pressure vessel on which the valve is designed to be installed;

(ii) The pressure in p.s.i.g. at which the valve will discharge;

(iii) The actual rate of discharge of the valve in cubic feet per minute of air at 60 degrees F. and 14.7 p.s.i.a.;

(iv) The manufacturer's name and catalog number, for example: T200-250-4050 AIR – indicating that the valve is suitable for use on a Type 200 container that it is set to start to discharge at 250 p.s.i.g., and

(v) That its rate of discharge is 4,050 cubic feet per minute of air as noted in **OAR 437-004-0780(i)(B)**.

(K) Safety relief valve assemblies, including their connections, must provide the rate of flow required for the container on which they are installed.

(L) A hydrostatic relief valve must be between each pair of shut-off valves on liquefied petroleum gas liquid piping to discharge into a safe atmosphere. The start-to-discharge pressure setting must not be more than 500 p.s.i.g. The minimum setting on relief valves in piping connected to other than DOT containers must not be lower than 140 percent of the container relief valve setting and in piping connected to DOT containers not lower than 400 p.s.i.g. The start-to-discharge pressure setting of a relief valve installed on the discharge side of a pump, must be more than the maximum pressure permitted by the recirculation device in the system.

(M) Safety relief devices must not discharge in or beneath a building, except devices covered by **OAR 437-004-0780(3)(f)(A)(i)** through **(iv)**, or **(4)(d)(A)** or **(e)**.

(N) Container safety relief devices and regulator relief vents must be at least 5 feet in any direction from air openings into sealed combustion system appliances or mechanical ventilation air intakes.

(j) Vaporizer and housing.

(A) Indirect fired vaporizers using steam, water, or other heating medium must comply with the following:

(i) Vaporizers must comply with OAR 437-004-0780(3)(b)(A) through (C) and have permanent marks as follows:

(I) The code marking signifying the specifications of the vaporizer.

(II) The allowable working pressure and temperature for the vaporizer.

(III) The sum of the outside surface area and the inside heat exchange surface area in square feet.

(IV) The name or symbol of the manufacturer.

(ii) Vaporizers with an inside diameter of 6 inches or less exempted by the ASME Unfired Pressure Vessel Code, Section VIII of the ASME Boiler and Pressure Vessel Code – 1968 must have a design pressure not less than 250 p.s.i.g. and need no permanent marks.

(iii) Do not install heating or cooling coils inside a storage container.

(iv) Vaporizers are acceptable in buildings, rooms, sheds, or lean-tos used exclusively for gas manufacturing or distribution, or in other structures of light, noncombustible construction or equivalent, well ventilated near the floor line and roof.

When vaporizing and/or mixing equipment is in a structure or building not used exclusively for gas manufacturing or distribution, either attached to or within such a building, separate the structure or room from the rest of the building with a wall that will withstand a static pressure of at least 100 pounds per square foot. This wall must have no openings or pipe or conduit passing through it. Such structure or room must have enough ventilation and must have a roof or at least one exterior wall of lightweight construction.

(v) Vaporizers must have, at or near the discharge, a relief valve with a discharge rate complying with OAR 437-004-0780(3)(i)(C), except as in (4)(d)(F)(i).

(vi) The heating medium lines into and leaving the vaporizer must have suitable means for preventing gas flow into the heat systems in the event of tube rupture in the vaporizer. Vaporizers must have suitable automatic means to prevent liquid passing through the vaporizers to the gas discharge piping.

(vii) The device that supplies the necessary heat for producing steam, hot water, or other heating medium may be in a building, compartment, room, or lean-to that must have ventilation near the floorline and roof to the outside. A wall that can withstand a static pressure of at least 100 pounds per square foot must separate the device from all compartments or rooms that have liquefied petroleum gas vaporizers, pumps, and central gas mixing devices. This wall must have no openings or pipes or conduit passing through it. This requirement does not apply to the domestic water heaters that may supply heat for a vaporizer in a domestic system.

(viii) Gas-fired heating systems supplying heat exclusively for vaporization purposes must have automatic devices to shut off the flow of gas to main burners, if the pilot light should fail.

(ix) Vaporizers may be an integral part of a fuel storage container directly connected to the liquid section or gas section or both.

(x) Vaporizers must not have fusible plugs.

(xi) Vaporizer houses must not have unprotected drains to sewers or sump pits.

(B) Atmospheric vaporizers using heat from the ground or surrounding air must be as follows:

(i) Buried underground, or

(ii) Inside the building close to a point at which pipe enters the building if the capacity of the unit does not exceed 1-quart.

(iii) Vaporizers of less than 1-quart capacity heated by the ground or surrounding air, need not have relief valves if adequate tests show that the assembly is safe without them.

(C) Make, mark and install direct gas-fired vaporizers as follows:

(i)

(I) In accordance with the requirements of the American Society of Mechanical Engineers Boiler and Pressure Vessel Code – 1968 that are applicable to the maximum working conditions for which the vaporizer is designed.

(II) With the name of the manufacturer; rated B.t.u. input to the burner; the area of the heat exchange surface in square feet; the outside surface of the vaporizer in square feet; and the maximum vaporizing capacity in gallons per hour.

(ii)

(I) Vaporizers may be connected to the liquid section or the gas section of the storage container, or both; but in any case there must be at the container a manually operated valve in each connection to permit completely shutting off when desired, of all flow of gas or liquid from container to vaporizer.

(II) Vaporizers with capacity not more than 35 gallons per hour must be at least 5 feet from container shutoff valves. Vaporizers with capacity of more than 35 gallons but not more than 100 gallons per hour must be at least 10 feet from the container shutoff valves. Vaporizers with a capacity more than 100 gallons per hour must be at least 15 feet from container shutoff valves.

(iii) Vaporizers may be in buildings, rooms, housings, sheds, or lean-tos used exclusively for vaporizing or mixing of liquefied petroleum gas. Vaporizing housing structures must be of non-combustible construction, well ventilated near the floorline and the highest point of the roof. When vaporizer and/or mixing equipment is located in a structure or room attached to or within a building, such structure or room must be separated from the remainder of the building by a wall that can withstand a static pressure of at least 100 pounds per square foot. This wall must have no openings or pipes or conduit passing through it. Such structure or room must have adequate ventilation, and must have a roof or at least one exterior wall of lightweight construction.

(iv) Vaporizers must have at or near the discharge, a relief valve with an effective discharge rate complying with **OAR 437-004-0780(3)(i)(C)**. The relief valve must not be subjected to temperatures more than 140 degrees F.

(v) Vaporizers must have suitable automatic means to prevent liquid passing from the vaporizer to the gas discharge piping of the vaporizer.

(vi) Vaporizers must have means for manually turning off the gas to the main burner and pilot.

(vii) Vaporizers must have automatic devices to shut off the flow of gas to main burners if the pilot light should fail. When the flow through the pilot is more than 2,000 B.t.u. per hour, the pilot also must have an automatic device to shut off the flow of gas to the pilot if the pilot flame goes out.

(viii) Pressure regulating and pressure reducing equipment if within 10 feet of a direct fire vaporizer must be separated from the open flame by a substantially airtight noncombustible partition or partitions.

(ix) Except as in **(iii)**, keep the following minimum distances between direct fired vaporizers and the nearest building or group of buildings:

Ten feet for vaporizers with a capacity of 15 gallons per hour or less vaporizing capacity.

Twenty-five feet for vaporizers with a vaporizing capacity of 16 to 100 gallons per hour.

Fifty feet for vaporizers with a vaporizing capacity more than 100 gallons per hour.

(x) Direct fired vaporizers must not raise the product pressure above the design pressure of the vaporizer equipment or raise the product pressure within the storage container above the pressure in the second column of Table H-8.

(xi) Vaporizers must not have fusible plugs.

(xii) Vaporizers must not have unprotected drains to sewers or sump pits.

(D) Install and use direct gas-fired tank heaters as follows:

(i) Direct gas-fired tank heaters, and tanks to which they are applied, must only be aboveground.

(ii) Tank heaters must have permanent markings with the name of the manufacturer, the rated B.t.u. input to the burner, and the maximum vaporizing capacity in gallons per hour.

(iii) Tank heaters may be an integral part of a fuel storage container directly connected to the container liquid section, or vapor section, or both.

(iv) Tank heaters must have a means for manually turning off the gas to the main burner and pilot.

(v) Tank heaters must have an automatic device to shut off the flow of gas to main burners, if the pilot light should fail. When flow through pilot exceeds 2,000 B.t.u. per hour, the pilot also must have an automatic safety device to shut off the gas to the pilot if the pilot flame goes out.

(vi) Separate pressure regulating and pressure reducing equipment if within 10 feet of a direct fired tank heater, from the open flame by a substantially airtight noncombustible partition.

(vii) Keep these minimum distances between a storage tank heated by a direct fired tank heater and the nearest important building or group of buildings:

Ten feet for storage containers of less than 500 gallons water capacity.

Twenty-five feet for storage containers of 500 to 1,200 gallons water capacity.

Fifty feet for storage containers of over 1,200 gallons water capacity.

(viii) No direct fired tank heater must raise the product pressure within the storage container over 75 percent of the pressure set out in the second column of Table H-8.

(E) The vaporizer section of vaporizer-burners used for dehydrators or dryers must be outside of buildings and as follows:

(i) Vaporizer-burners must have a minimum design pressure of 250 p.s.i.g. with a factor of safety of five.

(ii) Manually operated positive shut-off valves must be at the containers to shut off all flow to the vaporizer-burners.

(iii) Minimum distances between storage containers and vaporizer-burners is as follows:

Water capacity per container (gallons)	Minimum distances (feet)
Less than 501	10
501 to 2,000	25
Over 2,000	50

(iv) The vaporizer section of vaporizer-burners must have a hydrostatic relief valve. The relief valve must not be subjected to temperatures more than of 140 degrees F. The start-to-discharge pressure setting must be set protect the components involved, but not less than 250 p.s.i.g. The discharge must be upward and away from component parts of the equipment and away from operating personnel.

(v) Vaporizer-burners must have means for manually turning off the gas to the main burner and pilot.

(vi) Vaporizer-burners must have automatic devices to shut off the flow of gas to the main burner and pilot if it goes out.

(vii) Locate or protect pressure regulating and control equipment so that the temperatures surrounding this equipment do not exceed 140 degrees F. except that you may use equipment components at higher temperatures if designed to withstand such temperatures.

(viii) Pressure regulating and control equipment when downstream of the vaporizer must be able to withstand the maximum discharge temperature of the vapor.

(ix) The vaporizer section of vaporizer-burners must not have fusible plugs.

(x) Vaporizer coils or jackets must be ferrous metal or high temperature alloys.

(xi) Equipment using vaporizer-burners must have automatic shutoff devices upstream and downstream of the vaporizer section connected to operate in case of excessive temperature, flame failure, and, if applicable, insufficient airflow.

(k) Filling densities.

(A) The **"filling density"** is the percent ratio of the weight of the gas in a container to the weight of water the container will hold at 60 degrees F. Fill containers according to the filling densities in Table 5.

Table 5 - Maximum Permitted Filling Density			
Specific gravity at 60° F. (15.6 ° C.)	Aboveground containers		Underground containers, all capacities
	0 to 1,200 U.S. gals. (1,000) imp. gal., 4,550 liters) total water cap.	0 to 1,200 U.S. gals. (1,000) imp. gal., 4,550 liters) total water cap.	
	Percent	Percent	Percent
0.496 - 0.503	41	44	45
.504 - .510	42	45	46
.511 - .519	43	46	47
.520 - .527	44	47	48
.528 - .536	45	48	49
.537 - .544	46	49	40
.545 - .552	47	50	51
.553 - .560	48	51	52
.561 - .568	49	52	53
.569 - .576	50	53	54
.577 - .584	51	54	55
.585 - .592	52	55	56
.593 - .600	53	56	57

(B) Except as in **(3)(k)(C)** below, any container including mobile cargo tanks and portable tank containers, shipped under DOT jurisdiction or made according to 49 CFR Chapter I Specifications must be charged according to 49 CFR Chapter I requirements.

(C) Portable containers not subject to DOT jurisdiction (such as, but not limited to, motor fuel containers on industrial and lift trucks, and farm tractors in **OAR 437-004-0780(6)**, or containers recharged at the installation) may be filled either by weight, or by volume using a fixed length dip tube gaging device.

(l) LP-Gas in buildings.

(A) Pipe vapor into buildings at pressures more than 20 p.s.i.g. only if the buildings or separate areas, (a) comply with this section; (b) are used only for vaporization equipment, pressure reduction, gas mixing, gas manufacturing, or distribution, or to house internal combustion engines, industrial processes, research and experimental laboratories, or equipment and processes using such gas and with a similar hazard; (c) buildings, structures, or equipment under construction or undergoing major renovation.

(B) Liquid is permitted in buildings as follows:

(i) Buildings, or separate areas of buildings, used exclusively to house equipment for vaporization, pressure reduction, gas mixing, gas manufacturing, or distribution, or to house internal combustion engines, industrial processes, research and experimental laboratories, or equipment and processes using such gas and having a similar hazard; and when such buildings, or separate areas are constructed according to this section.

(ii) Buildings, structures, or equipment under construction or undergoing major renovation if the temporary piping meets the following conditions:

(I) Liquid piping inside the building must conform to the requirements of **OAR 437-004-0780(3)(g)**, and must not exceed three-fourths iron pipe size. Copper tubing with an outside diameter of 3/4-inch or less is acceptable if it conforms to Type K of Specifications for Seamless Water Tube, ANSI H23.1-1970 (ASTM B88-69) (see Table 24). All such piping must have protection against construction hazards. Liquid piping inside buildings must be kept to a minimum. Fasten such piping securely to walls or other surfaces for adequate protection from breakage and place it to subject the liquid line to lowest ambient temperatures.

(II) There must be a shutoff valve in each intermediate branch line where it takes off the main line. A shutoff valve must also be at the appliance end of the intermediate branch line. Such shutoff valves must be upstream of any flexible connector used with the appliance.

(III) Suitable excess flow valves must be in the container outlet line supplying liquid LP-Gas to the building. A suitable excess flow valve must be immediately downstream of each shutoff valve. Suitable excess flow valves must be installed and sized where piping size is reduced.

(IV) Hydrostatic relief valves must comply with **OAR 437-004-0780(3)(i)(I)**.

(V) Do not use hose to carry liquid between the container and the building or at any point in the liquid line, except at the appliance connector.

(VI) Where flexible connectors are necessary for appliance installation, make them as short as practicable and they must comply with **OAR 437-004-0780 (3)(g)(B)** or **(h)**.

(VII) Minimize the release of fuel by either of the following methods when any section of piping or appliances is disconnected:

(C) Using an approved automatic quick-closing coupling (a type closing in both directions when coupled in the fuel line), or

(D) Closing the valve nearest to the appliance and allowing the appliance to operate until the fuel in the line is consumed.

(E) Do not take portable containers into buildings except as in **OAR 437-004-0780 (3)(e)(A)**.

(m) Transfer of liquids. The employer must assure that:

(A) At least one attendant stays close to the transfer connection, during the transfer of the product.

(B) Do not use or refill containers made according to 49 CFR Part 178 and authorized by 49 CFR Chapter 1 as a “single trip” or “nonrefillable container.”

(C) Do not vent gas or liquid to the atmosphere while transferring contents of one container to another, except as in **OAR 437-004-0780(6)(e)(D)**. This does not preclude the use of listed pumps that use LP-Gas vapor as a source of energy. They may vent to the atmosphere at a rate not more than that from a .1200-inch opening. Such venting and liquid transfer must be at least 50 feet from the nearest building.

(D) Filling of fuel containers for industrial trucks or motor vehicles from industrial bulk storage containers must be at least 10 feet from the nearest masonry-walled building or at least 25 feet from the nearest building or other construction and in any case, not less than 25 feet from any building opening.

(E) Filling of portable containers, containers on skids, fuel containers on farm tractors, or similar applications, from storage containers used in domestic or commercial service, must be at least 50 feet from the nearest building.

(F) The filling connection and the vent from the liquid level gages in containers, filled at point of installation, must be at least 10 feet in any direction from air openings into sealed combustion system appliances or mechanical ventilation air intakes.

(G) Gage and charge fuel supply containers only in the open air or in buildings especially for that purpose.

(H) The maximum vapor pressure of the product at 100 degrees F. during transfer into a container must comply with paragraphs **OAR 437-004-0780(c)(2)** and **(d)(3)**. (For DOT containers use DOT requirements.)

(I) Use only gases for which the system is designed, examined, and listed, particularly regarding pressures.

(J) Pumps or compressors must be designed for use with LP-Gas. When using compressors they must take suction from the vapor space of the container being filled and discharge to the vapor space of the container being emptied.

(K) Pumping systems, with a positive displacement pump, must have a recirculating device that limits the differential pressure on the pump under normal operating conditions to its maximum differential pressure rating. Protect the discharge of the pumping system so that pressure is never more than 350 p.s.i.g. If a recirculation system discharges into the supply tank and has a manual shutoff valve, there must be an adequate secondary safety recirculation system that has no means of making it inoperative. Manual shutoff valves in recirculation systems must be open except during an emergency or when the system is under repair.

(L) When necessary, unloading piping or hoses must have suitable bleeder valves to relieve pressure before disconnection.

(M) Agricultural air moving equipment, including crop dryers, must be off when filling supply containers unless the air intakes and sources of ignition are at least 50 feet from the container.

(N) Agricultural equipment using open flames or equipment with integral containers, such as flame cultivators, weed burners, and, tractors, must be off during refueling.

(n) Tank car or transport truck loading or unloading points and operations.

(A) The track of tank car sidings must be relatively level.

(B) A “Tank Car Connected” sign, as covered by DOT rules, must be at the active end or ends of the siding while the tank car is connected.

(C) While cars are on sidetrack for loading or unloading, block the wheels at both ends.

(D) The employer must insure that an employee is always present during loading or unloading of tank cars or trucks.

(E) A backflow check valve, excess-flow valve, or a shutoff valve with means of remote closing, to protect against uncontrolled discharge of LP-Gas from storage tank piping must be close to the point where the liquid piping and hose or swing joint pipe connect.

(F) Except as in **(3)(n)(G)** below, when the size (diameter) of the loading or unloading hoses and/or piping is reduced below the size of the tank car or transport truck loading or unloading connections, the adaptors to which lines are attached must have either a backflow check valve, a properly sized excess flow valve, or shutoff valve with means of remote closing, to protect against uncontrolled discharge from the tank car or transport truck.

(G) The requirement of **(3)(n)(F)** above does not apply if the tank car or transport has a quick-closing internal valve that remotely closes.

(H) The location of the tank car or transport truck loading or unloading point must consider the following:

(i) Nearness to railroads and highway traffic.

(ii) With respect to buildings on installer’s property.

(iii) Nature of occupancy.

(iv) Topography.

(v) Type of construction of buildings.

(vi) Number of tank cars or transport trucks that may be safely loaded or unloaded at one time.

(vii) Frequency of loading or unloading.

(I) Where practical, the distance of the unloading or loading point must conform to the distances in **OAR 437-004-0780(3)(e)(B)**.

(o) Instructions. Personnel performing installation, removal, operation, and maintenance work must have proper training.

(p) Electrical equipment and other sources of ignition.

(A) Fixed electrical equipment in classified areas must comply with **OAR 437-004-0780(q)**. Other electrical equipment and wiring must comply with Subdivision 4/S.

(B) There must be no open flames or other sources of ignition in vaporizer rooms (except those housing direct-fired vaporizers), pump houses, container charging rooms or other similar locations. Direct-fired vaporizers may not be in pump houses or container charging rooms.

(C) Liquefied petroleum gas storage containers do not require lightning protection.

(D) Since liquefied petroleum gas is in a closed system of piping and equipment, the system does not need to be electrically conductive or electrically bonded for protection against static electricity.

(E) Open flames, cutting or welding, portable electric tools, and extension lights capable of igniting LP-Gas, must not be in classified areas in Table 6 unless the LP-Gas facilities are free of all liquid and vapor.

Table 6

Part	Location	Extent of classification area [1]	Equipment shall be suitable for Class 1, Group D [2]
A	Storage containers other than DOT cylinders.	When 15 feet in all directions from connections, except connections otherwise covered in Table 28	Division 2
B	Tank vehicle and car loading and unloading [3].	Within 5 feet in all directions from connections regularly made or disconnected for product transfer	Division 1
		Beyond 5 feet but within 15 feet in all directions from a point where connections are regularly made or disconnected and within the cylindrical volume between the horizontal equator of the sphere and grade. (See Figure 1)	Division 2
C	Gage vent openings other than those on DOT cylinders.	Within 5 feet in all directions from point of discharge	Division 1
		Beyond 5 feet but within 15 feet in all directions from point of discharge	Division 2

(continued on next page.)

Table 6 (Continued)

Part	Location	Extent of classification area [1]	Equipment shall be suitable for Class 1, Group D [2]
D	Relief valve discharge other than those on DOT cylinders.	Within direct path of discharge	Division 1
		Within 5 feet in all directions from point of discharge	Division 1
		Beyond 5 feet but within 15 feet in all directions from point of discharge except within the direct path of discharge	Division 2
E	Pumps, compressors, gas-air mixers and vaporizers other than direct fired.	.....	
	Indoors without ventilation.	Entire room and any adjacent room not separated by a gas-tight partition	Division 1
		Within 15 feet of the exterior side of any exterior wall or roof that is not vapor-tight or within 15 feet of any exterior opening	Division 2
	Indoors with adequate ventilation [4]	Entire room and any adjacent room not separated by a gas-tight partition	Division 2
	Outdoors in open air at or above grade.	Within 15 feet in all directions from this equipment and within the cylindrical volume between the horizontal equator of the sphere and grade. (See Figure 1)	Division 2
F	Service Station Dispensing Units.	Entire space within dispenser enclosure, and 18 inches horizontally from enclosure exterior up to an elevation 4 feet above dispenser base. Entire pit or open space beneath dispenser	Division 1
		Up to 18 inches above grade within 20 feet horizontally from any edge of enclosure NOTE: For pits within this area, see Part F of this table.	Division 2
G	Pits or trenches containing or located beneath LP-Gas valves, pumps, compressors, regulators, and similar equipment.	.....	
	Without mechanical ventilation	Entire pit or trench	Division 1
		Entire room and any adjacent room not separated by a gas-tight partition	Division 1
		Within 15 feet in all directions from pit or trench when located outdoors	Division 2
	With adequate mechanical ventilation	Entire pit or trench	Division 2
		Entire room and any adjacent room not separated by a gas-tight partition	Division 2
		Within 15 feet in all directions from pit or trench when located outdoors	Division 2

(continued on next page.)

Table 6 (Continued)

Part	Location	Extent of classification area [1]	Equipment shall be suitable for Class 1, Group D [2]
H	Special buildings or rooms for storage of portable containers.	Entire room	Division 2
	Pipelines and connections containing operational bleeds, drips, vents or drains.	Within 5 feet in all directions from point of discharge	Division 1
		Beyond 5 feet from point of discharge, same as Part E of this table	
J	Container filling:		
	Indoors without ventilation	Entire room	Division 1
		Within 5 feet in all directions from connections regularly made or disconnected for product transfer	Division 1
	Indoors with adequate ventilation [4]	Beyond 5 feet and entire room	Division 2
	Outdoors in open air	Within 5 feet in all directions from connections regularly made or disconnected for product transfer	Division 1
		Beyond 5 feet but within 15 feet in all directions from a point where connections are regularly made or disconnected and within the cylindrical volume between the horizontal equator of the sphere and grade. (See Figure 1)	Division 2

[1] The classified area must not go beyond an unpierced wall, roof, or solid vapor-tight partition.
[2] See Subpart S of this part.
[3] When classifying extent of hazardous area, consider possible variations in the spotting of tank cars and tank vehicles at the unloading points and the effect these variations of actual spotting point may have on the point of connection.
[4] Ventilation, either natural or mechanical, is adequate when the concentration of the gas in a gas-air mixture does not exceed 25 percent of the lower flammable limit.

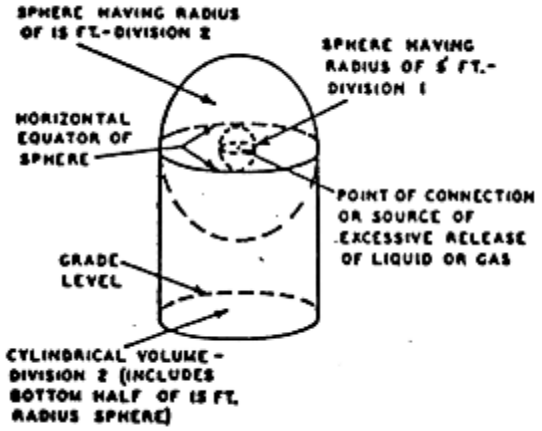

Figure 1

(q) Fixed electrical equipment in classified areas. Fixed electrical equipment and wiring in classified areas in Table 6 must comply with Table 6 and Subdivision 4/S. This provision does not apply to fixed electrical equipment at residential or commercial installations of LP-Gas systems or to systems covered by **OAR 437-004-0780(4)**.

(r) Liquid-level gaging device.

(A) Each container made after December 31, 1965, and filled on a volumetric basis must have a fixed liquid-level gage to indicate the maximum filling level as in **OAR 437-004-0780(b)(19)(v)**. Each container made after December 31, 1969, must have permanently attached to the container adjacent to the fixed level gage a marking showing the percentage full that will be shown by that gage. When there is also a variable liquid-level gage, the fixed gage will also serve as a way to check the variable gage. **OAR 437-004-0780(b)(12)** requires these gages in charging containers.

(B) Arrange all variable gaging devices so that the maximum allowed liquid level for butane, for a 50 – 50 mixture of butane and propane, and for propane, is readily determinable. The markings indicating the various liquid levels from empty to full must be on the system nameplate or gaging device or part may be on the system nameplate and part on the gaging device. Dials of magnetic or rotary gages must show whether they are for cylindrical or spherical containers and whether for aboveground or underground service. The dials of gages intended for use only on aboveground containers of over 1,200 gallons water capacity must be so marked.

(C) Gaging devices that require bleeding of the product to the atmosphere, such as the rotary tube, fixed tube, and slip tube, must have a bleed valve maximum opening not larger than .0550-inch, unless they have an excess flow valve.

(D) Gaging devices must have a design working pressure of at least 250 p.s.i.g.

(E) Length of tube or position of fixed liquid-level gage must indicate the maximum fill level of the container for the product contained. This level must be based on the volume of the product at 40 degrees F. at its maximum permitted filling density for aboveground containers and at 50 degrees F. for underground containers. The employer must calculate the filling point for which the fixed liquid level gage must be designed according to the method in this subdivision.

(i) It is impossible to set out in a table the length of a fixed dip tube for various capacity tanks because of the varying tank diameters and lengths and because the tank may be installed either in a vertical or horizontal position. Knowing the maximum permitted filling volume in gallons, however, the length of the fixed tube can be determined by the use of a strapping table obtained from the container manufacturer. The length of the fixed tube should be such that when its lower end touches the surface of the liquid in the container, the contents of the container will be the maximum permitted volume as determined by the following formula:

[(Water capacity (gals.) of container* X filling density**) ÷ (Specific gravity of LP-Gas* X volume correction factor X 100)] = Maximum volume of LP-Gas

* Measured at 60 degrees F.
** From subparagraph **(12)** of this paragraph "Filling Densities."

For aboveground containers the liquid temperature is assumed to be 40 degrees F. and for underground containers the liquid temperature is assumed to be 50 degrees F. To correct the liquid volumes at these temperatures to 60 degrees F. the following factors shall be used.

(ii) Formula for determining maximum volume of liquefied petroleum gas for which a fixed length of dip tube must be set:

Table 7 – Volume Correction Factors

Specific gravity	Aboveground	Underground
0.500	1.033	1.017
.510	1.031	1.016
.520	1.029	1.015
.530	1.028	1.014
.540	1.026	1.013
.550	1.025	1.013
.560	1.024	1.012
.570	1.023	1.011
.580	1.021	1.011
.590	1.020	1.010

(iii) The maximum volume of LP-Gas that can be in a container when determining the length of the dip tube expressed as a percentage of total water content of the container is calculated by the following formula.

(iv) The maximum weight of LP-Gas which may be placed in a container for determining the length of a fixed dip tube is determined by multiplying the maximum volume of liquefied petroleum gas obtained by the formula in **(3)(r)(E)(i)** above by the pounds of liquefied petroleum gas in a gallon at 40 degrees F. for aboveground and at 50 degrees F. for underground containers. For example, typical pounds per gallon are below:

Example: Assume a 100-gallon total water capacity tank for aboveground storage of propane having a specific gravity of 0.510 of 60º F.

[(100 (gals.) X 42 (filling density from **OAR 437-004-0780(3)(k)**) ÷ (0.510 X 1.031 (correction factor from Table 7) X 100)] = (4200 ÷ 52.6)

(4200 ÷ 52.6) = 79.8 gallons propane, the maximum amount permitted to be placed in a 100-gallon total water capacity aboveground container with a fixed dip tube.

[(Maximum volume of LP-Gas (from formula in Table 7) X 100) ÷ Total water content of container in gallons] = Maximum percent of LP-Gas

	Aboveground, pounds per gallon	**Underground, pounds per gallon**
Propane	4.37	4.31
N Butane	4.97	4.92

(F) Fixed liquid-level gages on containers other than DOT containers must be stamped on the exterior of the gage with the letters “DT” followed by the vertical distance (expressed in inches and carried out to one decimal place) from the top of container to the end of the dip tube or to the centerline of the gage when it is at the maximum permitted filling level. For portable containers that may be filled in the horizontal and/or vertical position the letters “DT” must be followed by “V” with the vertical distance from the top of the container to the end of the dip tube for vertical filling and with “H” followed by the proper distance for horizontal filling. For DOT containers the stamping must be both on the exterior of the gage and on the container. On aboveground or cargo containers where the gages are positioned at specific levels, the marking may be in percent of total tank contents and the marking must be on the container.

(G) Columnar gage glasses must be restricted to charging plants where the fuel is withdrawn in the liquid only. They must have valves with metallic handwheels, excess flow valves, and extra-heavy glass adequately protected with a metal housing applied by the gage manufacturer. They must be shielded against the direct rays of the sun. Do not use columnar gage glasses on tank trucks, motor fuel tanks or on containers used in domestic, commercial, and industrial installations.

(H) Gaging devices of the float, or equivalent type that do not require flow for their operation and with connections extending to a point outside the container do not have to have excess flow valves if the piping and fittings will withstand the container pressure and are properly protected against physical damage.

(s) Requirements for appliances.

(A) Except as in **(3)(s)(B)** below, new commercial and industrial gas consuming appliances must be approved.

(B) If an appliance was made to use a gas other than LP-Gas, it may be used with LP-Gas only after it is properly converted, adapted and tested for performance before placing it in use.

(C) Unattended heaters inside buildings for animal or poultry production or care must have an approved automatic device to shut off the gas if the flame goes out.

(D) Install all agricultural appliances or equipment according to the requirements of this section and the following:

(i) Domestic and commercial appliances – NFPA 54-1969, Standard for the Installation of Gas Appliances and Gas Piping.

(ii) Industrial appliances – NFPA 54A-1969, Standard for the Installation of Gas Piping and Gas Equipment on Industrial Premises and Certain Other Premises.

(iii) Standard for the Installation and Use of Stationary Combustion Engines and Gas Turbines – NFPA 37-1970.

(4) Cylinder systems.

(a) Application. This paragraph applies specifically to systems using DOT containers. All requirements of **OAR 437-004-0780(3)** apply to this paragraph unless otherwise noted in **OAR 437-004-0780(3)**.

(b) Marking of containers.

(A) Container markings must comply with DOT regulations. Additional markings not in conflict with DOT regulations are acceptable.

(B) Each container must show its water capacity in pounds or other identified unit of weight unless it is filled and maintained only by the owner or their representative and the water capacity is identified by a code.

(C) Each container must show its tare weight in pounds or other identified unit of weight including all permanently attached fittings but not the cap.

(c) Description of a system. A system includes the container base or bracket, containers, container valves, connectors, manifold valve assembly, regulators, and relief valves.

(d) Containers and regulating equipment outside of buildings or structures.

(A) Do not bury containers. This does not prohibit installation below grade level if the container and regulating equipment do not contact the ground. The area must have drainage and ventilate horizontally to the outside air from its lowest level. The outlet must be at least 3 feet away from any building opening that is below it.

(B) Except as in **OAR 437-004-0780(3)(i)(M)**, the discharge from safety relief devices must be at least 3 feet horizontally away from any building opening below the level of discharge and must not end beneath any building unless the space has good ventilation and only two enclosed sides.

(C) Containers must be on a firm foundation or otherwise firmly secured. Connect outlet pipes with a flexible or special fitting.

(e) Containers and equipment inside buildings or structures.

(A) When you must use portable containers inside buildings or structures follow **(i)** through **(xii)** below, and other parts of this subparagraph **(A)** that apply.

(i) Use containers with and connect only to compatible equipment or appliances.

(ii) Systems using containers with a water capacity more than 2 1/2 pounds (nominal 1-pound LP-Gas capacity) must have excess flow valves. The valves must be integral either with the container valves or in the connections to the container valve outlets. In either case, an excess flow valve must prevent strain beyond the excess flow valve from causing a break between the container and the valve.

(iii) Regulators must be connect directly either to the container valves or to manifolds connected to the container values. The regulator must be suitable for use with LP-Gas. Manifolds and fittings connecting containers to pressure regulator inlets must withstand at least 250 p.s.i.g. service pressure.

(iv) Protect valves on containers with a water capacity more than 50 pounds (nominal 20 pounds LP-Gas capacity) while in use.

(v) Containers must have markings that comply with **OAR 437-004-0780(3)(d)(C)** and **(4)(b)**.

(vi) Pipe or tubing must conform to **OAR 437-004-0780(3)(g)**. Do not use aluminum pipe or tubing.

(vii)

(I) Hose must have a working pressure of at least 250 p.s.i.g. Hose and hose connections must be listed by a nationally recognized testing laboratory. The hose length may be more than the length in **OAR 437-004-0780(3)(h)(G)(ii)**, but must be as short as practicable. Refer to §1910.7 for definition of nationally recognized testing laboratory.

(II) Hose must be long enough to permit compliance with spacing provisions of this subparagraph without kinking or straining or causing hose to be so close to a burner as to be damaged by heat.

(viii) Portable heaters, including salamanders, must have an approved automatic device to shut off the gas if the flame goes out. Heaters with inputs more than 50,000 B.t.u. made on or after May 17, 1967, and heaters with inputs more than 100,000 B.t.u. made before May 17, 1967, must have either:

(I) A pilot that must light before the main burner can be turned on; or

(II) An electric ignition system.

This paragraph (viii) does not apply to tar kettle burners, torches, melting pots, nor to portable heaters less than 7,500 B.t.u.h. input used with containers with a maximum water capacity of 2 1/2 pounds. Do not use container valves, connectors, regulators, manifolds, piping, and tubing as structural supports for heaters.

(ix) Locate containers, regulating equipment, manifolds, pipe, tubing, and hose to minimize exposure to abnormally high temperatures, physical damage, or tampering by unauthorized persons.

(x) Locate and use heat producing equipment in a way that minimizes the possibility of ignition of combustibles.

(xi) Containers with a water capacity more than 2 1/2 pounds (nominal 1-pound LP-Gas capacity) connected for use, must be upright on a firm and level surface.

(xii) Containers, including the valve protective devices, must be installed to minimize the probability of impingement of discharge of safety relief devices on containers.

(B) Containers with a maximum water capacity of 2 1/2 pounds (nominal 1-pound LP-Gas capacity) are allowed inside buildings as part of approved self-contained hand torch assemblies or similar appliances.

(C) You may use containers in buildings or structures under construction or major renovation and not occupied by the public, as follows:

(i) The maximum water capacity of individual containers is 245 pounds (nominal 100 pounds LP-Gas capacity).

(ii) For temporary heating such as curing concrete, drying plaster and similar applications, heaters (other than integral heater-container units) must be at least 6 feet from any LP-Gas container. This does not prohibit the use of heaters designed for attachment to the container or to a supporting standard, if they do not allow direct or radiant heat application onto the container. Blower and radiant type heaters must not point toward any LP-Gas container within 20 feet.

(iii) If two or more heater-container units, of either the integral or non-integral type, are in an unpartitioned area on the same floor, separate them by at least 20 feet.

(iv) Storage of containers awaiting use must comply with **OAR 437-004-0780(7)**.

(D) Containers are allowed in buildings for temporary emergency heating purposes, to prevent damage to the buildings or contents, when the permanent heating system is temporarily out of service, as follows:

(i) Containers and heaters must comply with and be used according to **OAR 437-004-0780(4)(e)(C)**.

(ii) Do not leave the temporary heating equipment unattended.

(f) Container valves and accessories.

(A) Valves in the assembly of multiple container systems must allow replacement of containers without shutting off the flow of gas in the system.

NOTE: This does not require an automatic changeover device.

(B) Firmly attach regulators and low-pressure relief devices to the cylinder valves, cylinders, supporting standards or the building walls. The weather must not affect their operation.

(C) Protect valves and connections to the containers while in transit, in storage, and while being moved into final use, as follows:

(i) By setting into the recess of the container to prevent their being struck if the container is dropped on a flat surface, or

(ii) By ventilated cap or collar, fastened to the container and strong enough to prevent the force of a blow from affecting the valve or other connection.

(D) Keep outlet valves tightly closed or plugged on unconnected containers, although the containers are empty.

(E) Containers with a water capacity more than 50 pounds (approximately 21 pounds LP-Gas capacity), recharged at the installation, must have excess flow or backflow check valves to prevent the discharge of contents in case of failure of the filling or equalizing connection.

(g) Safety devices.

(A) Containers must have safety devices as required by DOT regulations.

(B) A final stage regulator of an LP-Gas system (excluding any appliance regulator) must have on the low-pressure side with a relief valve set to start to discharge within the limits in Table 8.

Table 8		
Regulator delivery pressure	**Relief valve start-to-discharge pressure setting (percent of regulator delivery pressure)**	
	Minimum	**Maximum**
1 p.s.i.g. or less	200	300
Above 1 p.s.i.g. but not over 3 p.s.i.g	140	200
Above 3 p.s.i.g	125	200

(C) When using a regulator or pressure relief valve inside a building for other than purposes in **OAR 437-004-0780(3)(e)(A)(i) through (vii)**, vent the relief valve and the space above the regulator and relief valve diaphragms to the outside air with the discharge outlet at least 3 feet horizontally away from any building opening below the discharge. This does not apply to protected individual appliance regulators nor to **OAR 437-004-0780(4)(e)** and **(3)(i)(m)**.

(h) Reinstallation of containers. Do not reinstall containers unless they requalify according to DOT regulations.

(i) Permissible product. Do not put a product in a container marked with a service pressure less than four-fifths of the maximum vapor pressure of the product at 130 degrees F.

(5) Systems using containers other than DOT containers.

(a) Application. This paragraph applies specifically to systems using storage containers other than those that comply with DOT specifications. **OAR 437-004-0780(3)** applies unless otherwise noted in **OAR 437-004-0780(3)**.

(b) Design pressure and classification of storage containers. Storage containers must comply with Table 9.

Table 9			
Container type	**For gasses with vapor press. Not to exceed lb. per sq. in. gage at 100º F. (37.8º C.)**	**Minimum design pressure of container, lb. per sq. in. gage**	
		1949 and earlier editions of ASME Code (Par. U-68, U-69)	**1949 edition of ASME Code (Par. U-200, U-201); 1950, 1952, 1956, 1959, 1962, 1965 and 1968 (Division 1) editions of ASME Code**
[1] 80	[1] 80	[1] 80	[1] 100
100	100	100	125
125	125	125	156
150	150	150	187
175	175	175	219
[2] 200	215	200	250

[1] Type 80 storage containers have not been legal since Dec. 31, 1947.

[2] The container type may increase in increments of 25. The minimum design pressure of containers is 100 percent of the container type designation when made under 1949 or earlier editions of the ASME Code (Par. U-68 and U-69). The minimum design pressure of containers is 125 percent of the container type designation when made under: (1) the 1949 ASME Code (Par. U-200 and U-201), (2) 1950, 1952, 1956, 1959, 1962, 1965, and 1968 (Division 1) editions of the ASME Code.

(c) Container valves and accessories, filler pipes, and discharge pipes.

(A) The filling pipe inlet terminal must not be inside a building. For containers with a water capacity of 125 gallons or more, such terminals must be at least 10 feet from any building, 5 feet or more from a driveway (see **OAR 437-004-0780(3)(e)(B)**) and in a protective housing built for the purpose.

(B) The filling connection must have one of the following:

(i) Combination back-pressure check valve and excess flow valve.

(ii) One double or two single back-pressure check valves.

(iii) A positive shutoff valve, with either:

(I) An internal back-pressure valve, or

(II) An internal excess flow valve.

(C) All openings in a container must have approved automatic excess flow valves except in the following: Filling connections in **OAR 437-004-0780(5)(c)(B)**; safety relief connections, liquid-level gaging devices **OAR 437-004-0780(3)(f)(D)**; pressure gage connections in **(3)(f)(E)**.

(D) If the following exist, you do not need an excess flow valve in the withdrawal service line:

(i) Such systems' total water capacity does not exceed 2,000 U.S. gallons.

(ii) Control of the discharge from the service outlet is by a manual shutoff valve that is:

(I) Threaded directly into the service outlet of the container; or

(II) Is an integral part of a substantial fitting threaded into or on the service outlet of the container; or

(III) Threaded directly into a substantial fitting threaded into or on the service outlet of the container.

(iii) The shutoff valve has an attached handwheel or the equivalent.

(iv) The controlling orifice between the contents of the container and the outlet of the shutoff valve is not more than 5/16-inch in diameter for vapor withdrawal systems and 1/8-inch in diameter for liquid withdrawal systems.

(v) An approved pressure-reducing regulator is directly attached to the outlet of the shutoff valve and is rigidly supported, or that an approved pressure-reducing regulator is attached to the outlet of the shutoff valve with a suitable flexible connection, if the regulator has adequate support and protection on or at the tank.

(E) All inlet and outlet connections except safety relief valves, liquid level gaging devices and pressure gages on containers of 2,000 gallons water capacity, or more, and on any container that supplies fuel directly to an internal combustion engine, must have labeling to show whether they communicate with vapor or liquid space. Labels may be on valves.

(F) Instead of an excess flow valve, openings may have a quick-closing internal valve that, except during operating periods remains closed. The internal mechanism for such valves may have a secondary control that must have a fusible plug (not more than 220 degrees melting point) that closes the internal valve automatically in case of fire.

(G) There can be only two plugged openings on a container of 2,000 gallons or less water capacity.

(H) Containers of 125 gallons water capacity or more made after July 1, 1961, must have an approved device for liquid evacuation. The minimum size is 3/4-inch National Pipe Thread minimum. A plugged opening does not satisfy this requirement.

(d) Safety devices.

(A) All safety devices must comply with the following:

(i) All container safety relief devices must be on the containers and have a direct link with the vapor space of the container.

(ii) Protect safety relief device discharge terminals against physical damage and such discharge pipes must have loose rain caps. There can be no return bends or restrictive pipe fittings.

(iii) Discharge lines from two or more safety relief devices on the same unit, or similar lines from two or more different units, may be run into a common discharge header, if the cross-sectional area of the header is at least equal to the sum of the cross-sectional areas of the individual discharge lines, and the setting of safety relief valves are the same.

(iv) Each storage container of more than 2,000 gallons water capacity must have a suitable pressure gage.

(v) A final stage regulator of an LP-Gas system (excluding any appliance regulator) must have, on the low-pressure side, a relief valve set to start to discharge within the limits in Table 8.

(vi) When a regulator or pressure relief valve is inside a building, it and the space above the regulator and relief valve diaphragms must vent to the outside air. The discharge outlet must be at least 3 feet horizontally away from any opening into the building that is below such discharge. (This does not apply to protected individual appliance regulators.)

(B) Provide safety devices for aboveground containers as follows:

(i) Containers aboveground of 1,200 gallons water capacity or less that may contain liquid fuel must have a spring-loaded relief valve or valves with a rate of discharge required by **OAR 437-004-0780(3)(i)(B)**. In addition to the required spring-loaded relief valve(s), you can use suitable fuse plug(s) if their total discharge area for each container is not more than 0.25 square inches.

(ii) The fuse plugs must melt between 208 degrees F. and 220 degrees F. Relief valves and fuse plugs must have a direct link with the container's vapor space.

(iii) On a container with a water capacity more than 125 gallons, but not more than 2,000 gallons, vent the discharge from the safety relief valves away from the container vertically upwards and unobstructed to prevent any impingement of escaping gas upon the container. Use loose-fitting rain caps. There must be a way to drain condensate that may accumulate in the relief valve or its discharge pipe.

(iv) On containers of 125 gallons water capacity or less, the discharge from safety relief devices must be at least 5 feet horizontally away from any opening into the building below the level of the discharge.

(v) On a container with a water capacity more than 2,000 gallons, the discharge from the safety relief valves must vent away from the container vertically upwards to a point at least 7 feet above the container, and unobstructed to the open air in a way that prevents any impingement of escaping gas upon the container. Use only loose-fitting rain caps. Condensation inside the safety relief valve or its discharge pipe must not make the valve inoperative. If there is a drain, there must be a way to protect the system against impingement of flame from ignition of any product escaping from the drain.

(e) Vaporizers. Safety devices for vaporizers must be provided as follows:

(A) Vaporizers of less than 1-quart total capacity, heated by the ground or the surrounding air, need not have safety relief valves if adequate tests certified by any of the authorities in **OAR 437-004-0780(3)(b)**, demonstrate that the assembly is safe without them.

(B) Vaporizers must not have fusible plugs.

(f) Reinstallation of containers. Containers may be reinstalled if they do not show any evidence of harmful external corrosion or other damage. Containers reinstalled underground, must have corrosion resistant coating in good condition (see **OAR 437-004-0780 (5)(h)(D)**). Containers reinstalled aboveground, must have safety devices and gaging devices that comply with **OAR 437-004-0780(5)(d)** and **OAR 437-004-0780(3)(r)** respectively.

(g) Capacity of containers. Maximum capacity for a storage container is 90,000 gallons water capacity.

(h) Installation of storage containers.

(A) Aboveground containers, except as in **(5)(h)(G)** below, must have substantial masonry or noncombustible structural supports on firm masonry foundation.

(B) Aboveground containers have support as follows:

(i) Horizontal containers must be on saddles in such a manner as to permit expansion and contraction. Use structural metal supports only with approved fire protection. There must be suitable means of preventing corrosion on the part of the container that contacts the foundations or saddles.

(ii) Containers of 2,000 gallons water capacity or less may have non-fireproofed ferrous metal supports if mounted on concrete pads or footings, and if the distance from the outside bottom of the container shell to the concrete pad, footing, or the ground is not more than 24 inches.

(C) Any container may have non-fireproofed ferrous metal supports if mounted on concrete pads or footings, and if the distance from the outside bottom of the container to the ground is not more than 5 feet, if the container is in an isolated location.

(D) Containers may be partially buried if the following requirements are met:

(i) The portion of the container below the surface and for a vertical distance not less than 3 inches above the surface of the ground is protected to resist corrosion, and the container is protected against settling and corrosion as required for fully buried containers.

(ii) Spacing requirements must be as specified for underground tanks in **OAR 437-004-0780(3)(f)(B)**.

(iii) Relief valve capacity must be as required for aboveground containers.

(iv) Container is not subject to vehicular damage, or has adequate protection against such damage.

(v) Filling densities must be as required for aboveground containers.

(E) The top of buried containers must be at least 6 inches below grade. Where an underground container might be subject to abrasive action or physical damage due to vehicular traffic or other causes, it must be:

(i) Not less than 2 feet below grade, or

(ii) Otherwise protected against such physical damage.

(iii) It will not be necessary to cover the portion of the container to which manhole and other connections are affixed; however, where necessary, there must be protection against vehicular damage. When necessary to prevent floating, containers must be securely anchored or weighted.

(F)

(i) Containers must have a protective coating before being placed under ground. This coating must be equivalent to hot-dip galvanizing or to two coatings of red lead followed by a heavy coating of coal tar or asphalt. In lowering the container into place, do not damage to the coating. Repair any damage to the coating must before backfilling.

(ii) Containers must be on a firm foundation (firm earth is OK) and surrounded with earth or sand firmly tamped in place.

(G) Containers with attached foundations (portable or semi-portable containers with suitable steel “runners” or “skids” known in the industry as “skid tanks”) must comply with these rules subject to the following:

(i) If they are for a given general location for a temporary period not longer than 6 months they need not have fire-resisting foundations or saddles but must have adequate ferrous metal supports.

(ii) The outside bottom of the container shell must not be more than 5 feet above the ground unless there are fire-resisting supports.

(iii) The bottom of the skids must be at least 2 inches but not more than 12 inches below the outside bottom of the container shell.

(iv) Flanges, nozzles, valves, fittings, and the like, having communication with the interior of the container, must have protection against physical damage.

(v) When not permanently on fire-resisting foundations, piping connections must be sufficiently flexible to minimize the possibility of breakage or leakage of connections if the container settles, moves, or is otherwise displaced.

(vi) Secure skids or lugs for attachment of skids, to the container according to the code or rules under which it was designed and built (with a minimum factor of safety of four) to withstand loading in any direction equal to four times the weight of the container and attachments when filled to the maximum permissible loaded weight.

(H) Field welding where necessary must be made only on saddle plates or brackets which were applied by the manufacturer of the tank.

(I) For aboveground containers, secure anchorage or adequate pier height must be provided against possible container flotation wherever sufficiently high floodwater might occur.

(J) When permanently installed containers are interconnected, compensate for expansion, contraction, vibration, and settling of containers, and interconnecting piping. Where flexible connections are used, they must be an approved type and must designed for a bursting pressure of at least five times the vapor pressure of the product at 100 degrees F. Do not use nonmetallic hose for permanently interconnecting such containers.

(K) Container assemblies listed for interchangeable installation aboveground or underground must conform to the requirements for aboveground installations with respect to safety relief capacity and filling density. For installation aboveground all other requirements for aboveground installations apply. For installation underground all other requirements for underground installations apply.

(i) Protection of container accessories. Protect valves, regulating, gaging, and other container accessory equipment against tampering and physical damage.

(j) Drips for condensed gas. Where vaporized gas on the low-pressure side of the system may condense to a liquid at normal operating temperatures and pressures, there must be suitable means for revaporization of the condensate.

(k) Damage from vehicles. Protect LP-Gas systems from vehicle traffic.

(l) Drains. Do not direct drains or blowoff lines into or near sewer systems.

(m) Lighting. Electrical equipment and installations must comply with **OAR 437-004-0780(3)(n)** and **(o)**.

(n) Vaporizers for internal combustion engines. Paragraph **OAR 437-004-0780(6)(g)** applies.

(o) Gas regulating and mixing equipment for internal combustion engines. Paragraph **OAR 437-004-0780(6)(h)** applies.

(6) Liquefied petroleum gas as a motor fuel.

(a) Application.

(A) This applies to internal combustion engines, fuel containers, and equipment for the use of LPG as a motor fuel on portable units including self-propelled vehicles.

(B) Paragraph **OAR 437-004-0780(5)** covers fuel containers and equipment for stationary internal combustion engines using LPG. This does not apply to containers for transportation of liquefied petroleum gases. All of **OAR 437-004-0780(3)** applies to this paragraph, unless otherwise noted in **OAR 437-004-0780(3)**.

(b) General.

(A) Do not fuel vehicles while passengers are on board.

(B) Fuels industrial trucks (including forklifts) with permanently mounted fuel tanks outdoors. Charging equipment must comply with paragraph (8).

(C) LP-Gas fueled industrial trucks must comply with the Standard for Type Designations, Areas of Use, Maintenance and Operation of Powered Industrial Trucks, NFPA 505-1969.

(D) Engines on vehicles must be off while fueling if the fueling operation involves venting to the atmosphere.

(c) Design pressure and classification of fuel containers.

(A) Except as in **(6)(c)(B)** and **(C)** below, containers must comply with Table 10.

(B) Fuel containers for use in industrial trucks (including forklifts) must be either DOT containers authorized for LP-Gas service with a minimum service pressure of 240 p.s.i.g. or minimum Container Type 250. Under 1950 and later ASME codes, this means a 312.5 p.s.i.g. design pressure container.

Table 10

Container type	For gasses with vapor press. Not to exceed lb. per sq. in. gage at 100º F. (37.8º C.)	Minimum design pressure of container, lb. per sq. in. gage	
		1949 and earlier editions of ASME Code (Par. U-68, U-69)	1949 edition of ASME Code (Par. U-200, U-201); 1950, 1952, 1956, 1959, 1962, 1965 and 1968 (Division 1) editions of ASME Code
[1] 200	215Z	200	250

[1] Container type may be increased by increments of 25. The minimum design pressure of containers is 100 percent of the container type designation when built under 1949 or earlier editions of the ASME Code (Par. U-68 and U-69). The minimum design pressure of containers is 125 percent of the container type designation when built under: (1) the 1949 ASME Code (Par. U-200 and U-201), (2) 1950, 1952, 1956, 1959, 1962, 1965, and 1968 (Division 1) editions of the ASME Code.

(C) Containers made and maintained under DOT specifications and regulations are acceptable fuel containers. They must conform to all requirements of this paragraph.

(D) All container inlets and outlets except safety relief valves and gaging devices must have labels that designate whether they link to vapor or liquid space. Labels may be on valves.

(d) Installation of fuel containers.

(A) Containers must be in a place that minimize the possibility of damage. Containers in the rear of trucks and buses, when protected by bumpers, comply. Fuel containers on passenger-carrying vehicles must be as far from the engine as practicable. There must be a seal between the passenger space or any space with radio equipment and the container space to prevent direct seepage of gas to these spaces. The container compartment must vent to the outside. If the fuel container is near the engine or the exhaust system, shield it from direct heat.

(B) Mount all fuel containers to prevent jarring loose, slipping, or rotating. The fastenings must withstand static loading in any direction equal to twice the weight of the tank and attachments when filled using a safety factor of not less than four. Only do field welding on saddle plates, lugs or brackets, originally attached to the container by the manufacturer.

(C) Permanently install fuel containers on buses.

(e) Valves and accessories.

(A) Container valves and accessories must have a rated working pressure of at least 250 p.s.i.g., and suitable for use on a liquefied petroleum gas service.

(B) The filling connection must have an approved double back-pressure check valve, or a positive shutoff in conjunction with an internal back-pressure check valve. On a removable container the filler valve may be a hand operated shutoff valve with an internal excess flow valve. Main shutoff valves on the container on liquid and vapor lines must be readily accessible.

(C) With the exceptions of **(D)(iii)** below, filling connections with approved automatic back-pressure check valves, and safety relief valves, all connections to containers with openings for the flow of gas more than .055-inch must have approved automatic excess flow valves.

(D) Liquid-level gaging devices:

(i) Do not use variable liquid-level gages that require the venting of fuel to the atmosphere on fuel containers of industrial trucks (including forklifts).

(ii) On portable containers that fill vertically and/or horizontally, the fixed liquid-level gage must show maximum permitted filling level for both vertical and horizontal filling with the container oriented to place the safety relief valve in communication with the vapor space.

(iii) For containers used only on farm tractors and charged at a point at least 50 feet from any building, the fixed liquid-level gaging device may equal that passed by a .1200-inch opening. You do not need an excess flow valve. Mark fittings with the restricted opening and the container they are on to show the size of the opening.

(iv) Protect all valves and connections on containers from damage. For farm tractors where parts of the vehicle protect the valves and fittings, this requirement is met. On removable containers the protection for the fittings must be permanently attached.

(v) For systems with removable fuel containers, there must be a way in the system to minimize the escape of fuel when exchanging containers. Either of these methods are acceptable:

(I) Using an approved automatic quick-closing coupling (a type closing in both directions when uncoupled) in the fuel line, or

(II) Closing the valve at the fuel container and allowing the engine to run until the fuel line is empty.

(f) Piping – including pipe, tubing, and fittings.

(A) Pipe from fuel container to first-stage regulator must be at least schedule 80 wrought iron or steel (black or galvanized), brass or copper; or seamless copper, brass, or steel tubing. Steel tubing must have a minimum wall thickness of 0.049-inch. Steel pipe or tubing must have protection against exterior corrosion. Copper tubing must be types K or L or equivalent with a minimum wall thickness of 0.032-inch. Approved flexible connections may be used between container and regulator or between regulator and gas-air mixer within the limits of approval. Do not use aluminum pipe or tubing. For removable containers use an approved flexible connection between the container and the fuel line.

(B) Install, brace and support all piping to reduce to a minimum the possibility of vibration strains or wear.

(g) Safety devices.

(A) Use only spring-loaded internal type safety relief valves on motor fuel containers.

(B) The discharge outlet from safety relief valves must be on the outside of enclosed spaces and as far as practicable from possible sources of ignition. It must vent upward within 45 degrees of the vertical to prevent impingement of escaping gas on containers, or parts of vehicles, or on vehicles in adjacent lines of traffic. Use a rain cap or other protector to keep water and dirt from collecting in the valve.

(C) When using a discharge line from the container safety relief valve, the line must be metallic, other than aluminum, and may not restrict the required flow of gas from the safety relief valve. Such discharge line must be able to withstand the pressure resulting from the discharge of vapor when the safety relief valve is fully open. When flexibility is necessary, use flexible metal hose or tubing.

(D) You can fill portable containers with volumetric filling in either the vertical or horizontal position only if the safety relief valve links with the vapor space.

(E) Paragraph **OAR 437-004-0780(3)(i)(L)** for hydrostatic relief valves applies.

(h) Vaporizers.

(A) Vaporizers and any part thereof and other devices that may be subjected to container pressure must have a design pressure of at least 250 p.s.i.g.

(B) Each vaporizer must have a valve or suitable plug which will permit substantially complete draining of the vaporizer. It must be located at or near the lowest portion of the section occupied by the water or other heating medium.

(C) Securely fasten vaporizers to minimize the possibility of their becoming loose.

(D) Permanently mark each vaporizer at a visible point as follows:

(i) With the design pressure of the fuel-containing portion in p.s.i.g.

(ii) With the water capacity of the fuel-containing portion of the vaporizer in pounds.

(E) Devices to supply heat directly to a fuel container must have an automatic device to cut off the supply of heat before the pressure inside the fuel container reaches 80 percent of the start to discharge pressure setting of the safety relief device on the fuel container.

(F) Engine exhaust gases are acceptable as a direct source of heat supply for the vaporization of fuel if the materials of construction of those parts of the vaporizer in contact with exhaust gases are resistant to the corrosive action of exhaust gases and the vaporizer system is designed to prevent excessive pressures.

(G) Vaporizers must not have fusible plugs.

(i) Gas regulating and mixing equipment.

(A) Approved automatic pressure reducing equipment must be between the fuel supply container and gas-air mixer to reduce the pressure of the fuel delivered to the gas-air mixer.

(B) An approved automatic shutoff valve must be in the fuel system ahead of the inlet of the gas-air mixer, to prevent flow of fuel to the mixer when the ignition is off and the engine is not running. For industrial trucks and engines operating in buildings other than those that exclusively house engines, the automatic shutoff valve must operate if the engine stops. Atmospheric type regulators (zero governors) are adequate as an automatic shutoff valve only in outdoor operation such as farm tractors, irrigation pump engines, and on other outdoor stationary engines.

(C) The source of the air for combustion must be completely isolated from the passenger compartment, ventilating system, or air conditioning system.

(j) Capacity of containers. No single fuel container on passenger carrying vehicles can be more than 200 gallons water capacity. No single fuel container on other vehicles normally operating on the highway can be more than 300 gallons water capacity.

(k) Stationary engines in buildings. Stationary engines and gas turbines in buildings, including portable engines used instead of or to supplement stationary engines, must comply with the Standard for the Institution and Use of Stationary Combustion Engines and Gas Turbines, NFPA 37-1970, and **OAR 437-004-0780(a), (b)**, and **(c)**.

(l) Portable engines in buildings.

(A) Only use portable engines in buildings for emergencies, except as in **OAR 437-004-0780(10)**.

(B) Exhaust gases must discharge outside the building or to an area where they are not hazard.

(C) There must be sufficient air for combustion and cooling.

(D) An approved automatic shutoff valve must be in the fuel system ahead of the engine, to prevent flow of fuel to the engine when the ignition is off or if the engine stops.

(E) The capacity of LP-Gas containers used with such engines must comply with **OAR 437-004-0780(4)(e)**.

(m) Industrial trucks inside buildings.

(A) LP-Gas-fueled industrial trucks are permitted in buildings and structures.

(B) No more than two LP-Gas containers can be on an industrial truck for motor fuel purposes.

(C) Do not leave industrial trucks unattended near sources of ignition.

(n) Garaging LP-Gas-fueled vehicles.

(A) LP-Gas-fueled vehicles may be stored or serviced inside garages.

(B) Keep the shutoff valve closed on LP-Gas-fueled vehicles being repaired in garages except when the engine must run.

(7) Storage of containers awaiting use.

(a) Application. This paragraph applies to the storage of portable containers not more than 1,000 pounds water capacity, filled or partially filled, at user location but not connected for use.

(b) General.

(A) Do not store containers near sources of heat or ignition or near stairs or exits.

(B) Keep the outlet valves of stored containers closed.

(C) Empty containers, stored inside, that have held LP-Gas are treated like full containers when calculating the maximum quantity of LP-Gas permitted by this paragraph.

(c) Storage within buildings not frequented by the public (such as agricultural buildings). Do not store more than 300 pounds (approximately 2,550 cubic feet in vapor form) except as in **(d)** below.

(d) Storage within special buildings or rooms.

(A) Do not store more than 10,000 pounds of LP-Gas in special buildings or rooms.

(B) The walls, floors, and ceilings of container storage rooms that are within or next to other parts of the building must have at least a 2-hour fire resistance rating.

(C) Part of the exterior walls or roof with an area at least 10 percent of the combined area of the enclosing walls and roof must be of explosion relieving construction.

(D) Each opening from such storage rooms to other parts of the building must have a 1 1/2-hour (B) fire door listed by a nationally recognized testing laboratory. Refer to §1910.7 for definition of nationally recognized testing laboratory.

(E) There must be no open flames in the rooms.

(F) The rooms must have adequate ventilation both top and bottom to the outside only. The openings from such vents must be at least 5 feet away from any other opening into any building.

(G) The floors of such rooms must not be below ground level.

(H) The rooms may not adjoin a property line occupied by schools, churches, hospitals, athletic fields or other public gathering places.

(I) Fixed electrical equipment must comply with **OAR 437-004-0780(3)(o)**.

(e) Storage outside buildings.

(A) Storage outside buildings, for containers awaiting use, must comply with Table 11 with respect to:

(i) The nearest building or group of buildings;

(ii) Busy highways;

Table 11

Quantity of LP-Gas Stored	Distances
500 pounds or less	0
501 to 2,500 pounds	[1] 0
2,501 to 6,000 pounds	10 feet
6,001 to 10,000 pounds	20 feet
Over 10,000 pounds	25 feet

[1] Containers must be at least 10 feet from any building on adjoining property, any sidewalk, or busy highway or road.

(B) Containers must be in a suitable enclosure or otherwise protected against tampering.

(f) Fire protection. Storage locations must have at least one approved portable fire extinguisher with rating of 8-B, C or more.

(8) Liquefied petroleum gas dispensing.

(a) Application. This paragraph applies to storage containers, dispensing devices, and equipment where LP-Gas is stored and dispensed into fuel tanks of motor vehicles. See **OAR 437-004-0780(6)** for requirements covering use of LP-Gas as a motor fuel. All requirements of **OAR 437-004-0780(3)** apply to this paragraph unless otherwise noted.

(b) Design pressure and classification of storage containers. Storage containers must comply with Table 12.

Table 12

Container type	For gasses with vapor press. Not to exceed lb. per sq. in. gage at 100º F. (37.8º C.)	Minimum design pressure of container, lb. per sq. in. gage	
		1949 and earlier editions of ASME Code (Par. U-68, U-69)	1949 edition of ASME Code (Par. U-200, U-201); 1950, 1952, 1956, 1959, 1962, 1965 and 1968 (Division 1) editions of ASME Code
[1] 200	215Z	200	250

[1] Container type may be increased by increments of 25. The minimum design pressure of containers is 100 percent of the container type designation when constructed under 1949 or earlier editions of the ASME Code (Par. U-68 and U-69). The minimum design pressure of containers is 125 percent of the container type designation when constructed under: (1) The 1949 ASME Code (Paragraphs U-200 and U-201), (2) 1950, 1952, 1956, 1959, 1962, 1965, and 1968 (Division 1) editions of the ASME Code.

(c) Container valves and accessories.

(A) A filling connection on the container must have one of the following:

(i) A combination back-pressure check and excess flow valve.

(ii) One double or two single back-pressure valves.

(iii) A positive shutoff valve, in conjunction with either,

(I) An internal back-pressure valve, or

(II) On internal excess flow valve.

Instead of an excess flow valve, filling connections may have a quick-closing internal valve, that must remain closed except during operating periods. The mechanism for such valves may have a secondary control that causes it to close automatically in case of fire. When using a fusible plug, its melting point must not be more than 220 degrees F.

(B) A filling pipe inlet terminal not on the container must have a positive shutoff valve in conjunction with either;

(i) A black pressure check valve, or

(ii) An excess flow check valve.

(C) All openings in the container except those below must have approved excess flow check valves:

(i) Filling connections as in subparagraph **(A)** above.

(ii) Safety relief connections as in **OAR 437-004-0780(3)(f)(B)**.

(iii) Liquid-level gaging devices as in **OAR 437-004-0780(3)(f)(D)**.

(iv) Pressure gage connections as in **OAR 437-004-0780(3)(f)(E)**.

(D) All container inlets and outlets except those listed below must have labels to designate whether they connect with vapor or liquid (labels may be on valves):

(i) Safety relief valves.

(ii) Liquid-level gaging devices.

(iii) Pressure gages.

(E) Each storage container must have a suitable pressure gage.

(d) Safety-relief valves.

(A) All safety-relief devices must be as follows:

(i) On the container and directly connected with the vapor space.

(ii) Safety-relief valves and discharge piping must have protection against physical damage. The outlet must have loose-fitting rain caps. There must be no return bends or restrictions in the discharge piping.

(iii) The discharge from two or more safety relief valves with the same pressure settings may be run into a common discharge header. The cross-sectional area of the header must be at least equal to the sum of the cross-sectional areas of the individual discharges.

(iv) Safety relief devices must not discharge in or under a building

(B) Aboveground containers must have safety relief valves as follows:

(i) The rate of discharge, provided by one or more valves, must be not less than in **OAR 437-004-0780(3)(i)(B)**.

(ii) The discharge from safety relief valves must vent to open air unobstructed and vertically in a way that prevents any impingement of escaping gas on the container. Use loose-fitting rain caps. On a container with a water capacity more than 2,000 gallons, the discharge from the safety relief valves must vent away from the container vertically to a point at least 7 feet above it. Condensation inside the relief valve or its discharge pipe must not make the valve inoperative. If there is a drain, there must be a way protect the container, adjacent containers, piping, or equipment against impingement of flame from ignition of the product escaping from the drain.

(C) Underground containers must be provided with safety relief valves as follows:

(i) The discharge from safety-relief valves must be piped vertically upward to a point at least 10 feet above the ground. The discharge lines or pipes must be adequately supported and protected against physical damage.

(ii) If no liquid is put into a container until after it is buried and covered, the rate of discharge of the relief valves may be reduced to not less than 30 percent of the rate in **OAR 437-004-0780(3)(j)(B)**. If liquid fuel is present during installation of containers, the rate of discharge must be the same as for aboveground containers. Such containers must not be uncovered until emptied of liquid fuel.

(e) Capacity of liquid containers. Individual liquid storage containers must not exceed 30,000 gallons water capacity.

(f) Installation of storage containers.

(A)

(i) Each storage container used exclusively in dispensing operations must comply with the following table that specifies minimum distances to a building and groups of buildings.

Water capacity per Container (gallons)	Minimum distances	
	Aboveground (feet)	Between aboveground containers (feet)
Up to 2,000	25	3
Over 2,000	50	5

NOTE: The above distances may be reduced to not less than 10 feet for dispensing facility buildings of other than wood frame construction.

(ii) There must be a 10-foot area around containers that is free of combustibles.

(iii) The minimum separation between LP-Gas containers and flammable liquid tanks is 20 feet and the minimum separation between a container and the centerline of the dike is 10 feet.

(iv) LP-Gas containers near flammable liquid containers must have dikes, diversion curbs, or grading to protect against the flow or accumulation of flammable liquids.

(v) LP-Gas containers must not be within diked areas for flammable liquid containers.

(vi) Do field welding on saddle plates or brackets applied by the container manufacturer.

(vii) Where flexible connections are used, they must be approved type and have a bursting pressure of not less than five times the vapor pressure of the product at 100 degrees F. Do not use nonmetallic hose for interconnecting such containers.

(viii) Where there may be a high water table or flood conditions there must be protection against container flotation.

(B) Aboveground containers must comply with this subdivision.

(i) Containers may be horizontal or vertical.

(ii) Unless protected by location, there must be protective barriers around containers. Do not service vehicles within 10 feet of containers.

(iii) Container foundations must be masonry or other noncombustible material. Containers must be on saddles that permit expansion and contraction.

(C) Underground containers must be installed in accordance with this subdivision.

(i) Containers must be given a protective coating before being placed underground. This coating must be equivalent to hot-dip galvanizing or to two coatings of red lead followed by a heavy coating of coal tar or asphalt. In lowering the container into place, care must be exercised to minimize abrasion or other damage to the coating. Damage to the coating must be repaired before backfilling.

(ii) Containers must be set on a firm foundation (firm earth may be used) and surrounded with earth or sand firmly tamped in place. Backfill should be free of rocks or other abrasive materials.

(iii) A minimum of 2 feet of earth cover must be provided. Where ground conditions make compliance with this requirement impractical, equivalent protection against physical damage must be provided. The portion of the container to which manhole and other connections are attached need not be covered. If the location is subjected to vehicular traffic, protect containers by a concrete slab or other cover adequate to prevent the weight of a loaded vehicle imposing concentrated direct loads on the container shell.

(g) Protection of container fittings. Valves, regulators, gages, and other container fittings must have protection against tampering and physical damage.

(h) Transport truck unloading point. The filling pipe inlet terminal must not be in a building nor within 10 feet of any building or driveway. It must be protected against physical damage.

(i) Piping, valves, and fittings.

(A) Piping may be underground, aboveground, or a combination of both.

(B) Piping beneath driveways must have protection from vehicle damage.

(C) Piping must be wrought iron or steel (black or galvanized), brass or copper pipe; or seamless copper, brass, or steel tubing and suitable for a minimum pressure of 250 p.s.i.g. Pipe joints may be screwed, flanged, brazed, or welded. Do not use aluminum alloy piping or tubing.

(D) All shutoff valves (liquid or gas) must be suitable for liquefied petroleum gas service and designed for not less than the maximum anticipated operating pressure. Valves that may experience container pressure must have a rated working pressure of at least 250 p.s.i.g.

(E) All materials used for valve seats, packing, gaskets, diaphragms, etc., must be resistant to the action of LP-Gas.

(F) Fittings must be steel, malleable iron, or brass with a minimum working pressure of 250 p.s.i.g. Do not use cast iron pipe fittings.

(G) After assembly, test all piping to assure it is free of leaks at not less than normal operating pressures.

(j) Pumps and accessories. All pumps and accessory equipment must be suitable for LP-Gas service, and designed for not less than the maximum anticipated operating pressure. Accessories must have a minimum rated working pressure of 250 p.s.i.g. Positive displacement pumps must have suitable pressure actuated bypass valves permitting flow from pump discharge to storage container or pump suction.

(k) Dispensing devices.

(A) Meters, vapor separators, valves, and fittings in the dispenser must be suitable for LP-Gas service and have a minimum working pressure of 250 p.s.i.g.

(B) Vent LP-Gas in a dispensing device to a safe location.

(C) Pumps used to transfer LP-Gas must allow control of the flow and prevent leakage or accidental discharge. There must be a way outside the dispensing device to shut off the power in case of fire or accident.

(D) A manual shutoff valve and an excess flow check valve must be downstream of the pump and ahead of the dispenser inlet.

(E)

(i) Dispensing hose must be resistant to the action of liquid LP-Gas and have a minimum bursting pressure of 1,250 p.s.i.g.

(ii) An excess flow check valve or automatic shutoff valve must be at the terminus of the liquid line at the point of attachment of the dispensing hose.

(F)

(i) LP-Gas dispensing devices must be at least 10 feet from aboveground storage containers more than 2,000 gallons water capacity. The dispensing devices must be at least 20 feet from any building (not including canopies), basement, cellar, pit, or line of adjoining property that may be developed and not less than 10 feet from sidewalks, streets, or thoroughfares. No drains or blowoff lines may discharge into or near to the sewer systems used for other purposes.

(ii) LP-Gas dispensing devices must be on a concrete foundation or as part of a complete storage and dispensing assembly mounted on a common base, and must be adequately protected from physical damage.

(iii) LP-Gas dispensing devices may not be in a building except that they may be under a weather shelter or canopy if it is not enclosed on more than two sides. If the enclosing sides are next to each other, the area must have proper ventilation.

(G) The dispensing of LP-Gas into the fuel container of a vehicle must be done by a competent attendant who stays at the LP-Gas dispenser during the entire transfer operation.

(l) Smoking. There must be no smoking on the driveway of dispensing facilities or transport truck unloading areas. Post signs prohibiting smoking in places easily seen by facility users.

(m) Motors. The motors of all vehicles being fueled must be off during the fueling operations.

(n) Electrical. Electrical equipment and installations must conform to **OAR 437-004-0780(3)(n)** and **(o)**.

(o) Fire protection. Each dispensing facility must have at least one approved portable fire extinguisher with at least an 8-B, C, rating.

Stat. Auth.: ORS 654.025(2) and 656.726(4).
Stats. Implemented: ORS 654.001 through 654.295.
Hist: OR-OSHA Admin. Order 4-1998, f/8/28/98, ef. 10/1/98.

437-004-0790 Use of Liquefied Petroleum Gas or Natural Gas in Fields and Orchards.

(1) Scope. This applies to the storage and use of liquefied petroleum gas or natural gas, in fields and orchards, to fuel or power stationary orchard heaters, fans, and other such fixed equipment. It does not cover portable orchard and field equipment. OAR 437-004-0780 covers all other uses of these gases.

(2) Definitions.

Approved – See universal definition in 4/B.

Competent person – See universal definition in 4/B.

Labeled – See universal definition in 4/B.

Liquefied petroleum gases – “LPG” and “LP-Gas” – Any material made mostly of any of the following hydrocarbons, or mixtures of them; propane, propylene, butane (normal butane or iso-butane), and butylenes.

Listed – See universal definition in 4/B.

(3) Components. The tank regulator and all components in between must be labeled, listed or approved.

(a) All piping and end use components, like fans and heaters, must be on the low pressure side of approved regulators.

(4) Installation. Installation of systems and equipment that use liquefied petroleum gas must only be by persons licensed according to ORS 480.410 through .460 and must conform to OAR 837, Division 30. (Contact the Office of State Fire Marshal for more information on these requirements.)

(5) Welding. Do not weld on parts of the system subject to pressure.

Stat. Auth.: ORS 654.025(2) and 656.726(4).
Stats. Implemented: ORS 654.001 through 654.295.
Hist: OR-OSHA Admin. Order 4-1998, f. 8/28/98, ef. 10/1/98.
OR-OSHA Admin. Order 7-2001, f. 5/15/01, ef. 5/15/01.

437-004-0800 Storage and Handling of Anhydrous Ammonia.

(1) Scope.

(a) This standard applies to the operation of anhydrous ammonia systems including refrigerated ammonia storage systems.

(b) This standard does not apply to applications that use ammonia solely as a refrigerant.

(2) Definitions.

Appurtenances – All devices such as pumps, compressors, safety relief devices, liquid-level gaging devices, valves and pressure gages.

Capacity – Total volume of the container in standard U.S. gallons.

Certified – See universal definitions in Subdivision 4/B, OAR 437-004-0100.

Code – The Boiler and Pressure Vessel Code, Section VIII, Unfired Pressure Vessels of the American Society of Mechanical Engineers (ASME) – 1968.

Container – Includes all vessels, tanks, cylinders, or spheres used for transportation, storage, or application of anhydrous ammonia.

Cylinder – A container of 1,000 pounds of water capacity or less built according to Department of Transportation specifications.

Design pressure – is identical to the term “Maximum Allowable Working Pressure” used in the Code.

DOT – U.S. Department of Transportation.

DOT specifications – Regulations of the Department of Transportation in 49 CFR Chapter I.

Farm vehicle (implement of husbandry) – A vehicle for use on a farm with a container of not more than 1,200 gallons water capacity on it.

Labeled – See universal definitions in Subdivision 4/B, OAR 437-004-0100.

Listed – See universal definitions in Subdivision 4/B, OAR 437-004-0100.

(3) Basic rules.

(a) Approval of equipment and systems. All systems, equipment and appurtenances must comply with one of the following three paragraphs.

(A) If installed before February 8, 1973, it must comply with American National Standard for the Storage and Handling of Anhydrous Ammonia, K61.1-1999 or CGA G-2.1-1999.

(B) It must be listed and labeled by a nationally recognized testing laboratory as defined in 29 CFR 1910.7.

(C) A registered engineer may test and certify custom designed and custom built systems as meeting the criteria in **OAR 437-004-0800(3)(a)(A)**. This certification must be on file with the employer for agency review. The certification must detail the test criteria, data and results along with the qualifications of the person doing the test.

(b) Requirements for construction, original test and recertification of non-refrigerated containers.

(A) Only competent persons and/or companies may design, install and maintain non-refrigerated containers.

(B) Containers used with systems in **OAR 437-004-0800(4)**, **(7)**, **(8)** and **(9)** must comply with the Code (Boiler and Pressure Vessel Code, Sec VIII, Unfired Pressure Vessels of the American Society of Mechanical Engineers (ASME) – 1968). Construction under Table UW 12 at a basic joint efficiency of less than 80 percent is not authorized.

(C) Containers more than 36 inches in diameter or 250 gallons water capacity must comply with one or more of the following:

(i) Containers must be stress relieved after fabrication according to the Code, or

(ii) Cold-form heads must be stress relieved, or

(iii) Use only hot-formed heads.

(D) Paragraph **(B)** above does not prohibit the continued use or reinstallation of containers constructed and maintained according to the 1949, 1950, 1952, 1956, 1959, and 1962 editions of the Code or any revisions in effect at the time of fabrication.

(E) Welding to the shell, head or any other part of the container subject to internal pressure must comply with the Code. Other welding is permitted only on saddle plates, lugs or brackets attached to the container by the container manufacturer.

(F) Containers used with systems in **OAR 437-004-0800(5)** must comply with DOT specifications.

(c) Marking of containers. Keep the original markings on refrigerated and non-refrigerated containers as they were at the time of installation.

(d) Location of containers.

(A) When selecting the location for the storage container consider the physiological effects as well as adjacent fire hazards. Locate containers outside buildings unless the building was built for this purpose.

(B) Locate permanent storage containers 50 feet from a dug well or other sources of potable water supply, unless the container is a part of a water-treatment installation.

(C) Keep storage areas free of readily ignitible materials such as waste, weeds and long dry grass.

(e) Container appurtenances.

(A) Design appurtenances to stand the maximum working pressure of that part of the system on which they are installed. Make appurtenances from material proved suitable for anhydrous ammonia service.

(B) All connections to containers except safety relief devices, gaging devices, or those fitted with a .0550-inch orifice must have shutoff valves as close to the container as practicable.

(C) Excess flow valves where required by these standards must close automatically at the rated flows of vapor or liquid specified by the manufacturer. The connections and line including valves and fittings protected by an excess flow valve must have a larger capacity than the rated flow of the excess flow valve so that the valve will close in case of failure of the line or fittings.

(D) Liquid-level gaging devices that require bleeding of the product to the atmosphere and are built so that outward flow will not be more than that passed by a .0550-inch opening do not need excess flow valves.

(E) Openings from the container or through fittings attached directly on the container to which pressure gage connections are made need do not need excess flow valves if they are not larger than .0550-inch.

(F) Excess flow and back pressure check valves where required by this section must be inside the container or if outside as close as practicable to where the line enters the container. In the latter case installation must prevent strain beyond the excess flow or back pressure check valve from causing a break between the container and the valve.

(G) Excess flow valves must have a bypass not to exceed a .0400-inch opening to allow equalization of pressures.

(H) All excess flow valves must have plain and permanent markings with the name or trademark of the manufacturer, the catalog number, and the rated capacity.

(f) Piping, tubing and fittings.

(A) All piping, tubing and fittings must be made of material suitable for anhydrous ammonia service.

(B) All piping, tubing and fittings must be designed for a pressure not less than the maximum pressure under which they might operate.

(C) All refrigerated piping must conform to the Refrigeration Piping Code, American National Standard, B31.5-1966 with addenda B31.5a-1968 as it applies to ammonia.

(D) Piping on non-refrigerated systems must be at least American Society for Testing and Materials (ASTM) A-53-69 Grade B Electric Resistance Welded and Electric Flash Welded Pipe or equal. For welded or welded and flanged joints the pipe must be at least schedule 40. For threaded joints the pipe must be at least schedule 80. Do not back-weld threaded connections. Do not use brass, copper or galvanized steel pipe.

(E) Do not use tubing made of brass, copper, or other material subject to attach by ammonia.

(F) Do not use cast iron fittings but this does not prohibit the use of fittings made specifically for ammonia service or malleable, nodular, or high strength gray iron meeting American Society for Testing and Materials (ASTM) A47-68, ASTM 395-68 or ASTM A126-66 Class B or C.

(G) Use joint compounds that are resistant to ammonia.

(g) Hose specifications.7

(A) Hose used in ammonia service must conform to the joint Agricultural Ammonia Institute – Rubber Manufacturers Association Specifications for Anhydrous Ammonia Hose.

(B) Hose subject to container pressure must be designed for a minimum working pressure of 350 p.s.i.g. and a minimum burst pressure of 1,750 p.s.i.g. Hose assemblies, when made up, must be capable of withstanding a test pressure of 500 p.s.i.g.

(C) Hose and hose connections on the low-pressure side of flow control or pressure-bleeding valves must have a bursting pressure rating of not less than five times the pressure setting of the safety relief devices protecting that part of the system but not less than 125 p.s.i.g. All connections must not leak when connected.

(D) Where using hose to transfer liquid from one container to another, “wet” hose is recommended. Such hose must have approved shutoff valves at the discharge end. Prevent excessive pressure in the hose.

(E) On all hose 1/2-inch outside diameter and larger, used for the transfer of anhydrous ammonia liquid or vapor, there must be etched, cast, or impressed at 5-foot intervals the following information.

“Anhydrous Ammonia” xxx p.s.i.g. (maximum working pressure), manufacturer’s name or trademark, year of manufacture.

In place of this requirement the same information may be on a nameplate permanently attached to the hose.

Table 1

[Minimum required rate of discharge in cubic feet per minute of air at 120 percent of the maximum permitted start to discharge pressure of safety relief valves]

Surface area (sq. ft.)	Flow rate CFM air	Surface area (sq. ft.)	Flow rate CFM air	Surface area (sq. ft.)	Flow rate CFM air
20	258	185	1,600	900	5,850
25	310	190	1,640	950	6,120
30	360	195	1,670	1,000	6,380
35	408	200	1,710	1,050	6,640
40	455	210	1,780	1,100	6,900
45	501	220	1,850	1,150	7,160
50	547	230	1,920	1,200	7,410
55	591	240	1,980	1,250	7,660
60	635	250	2,050	1,300	7,910
65	678	260	2,120	1,350	8,160
70	720	270	2,180	1,400	8,410
75	762	280	2,250	1,450	8,650
80	804	290	2,320	1,500	8,900
85	845	300	2,380	1,550	9,140
90	885	310	2,450	1,600	9,380
95	925	320	2,510	1,650	9,620
100	965	330	2,570	1,700	9,860
105	1,010	340	2,640	1,750	10,090
110	1,050	350	2,700	1,800	10,330
115	1,090	360	2,760	1,850	10,560
120	1,120	370	2,830	1,900	10,800
125	1,160	380	2,890	1,950	11,030
130	1,200	390	2,950	2,000	11,260
135	1,240	400	3,010	2,050	11,490
140	1,280	450	3,320	2,100	11,720
145	1,310	500	3,620	2,150	11,950
150	1,350	550	3,910	2,200	12,180
155	1,390	600	4,200	2,250	12,400
160	1,420	650	4,480	2,300	12,630
165	1,460	700	4,760	2,350	12,850
170	1,500	750	5,040	2,400	13,080
175	1,530	800	5,300	2,450	13,300
180	1,570	850	5,590	2,500	13,520

"Surface Area = total outside surface area of container in square feet. When the surface area is not on the nameplate or when the marking is not legible calculate the area using one of the following formulas:

(1) Cylindrical container with hemispherical heads:

Area = overall length in feet times outside diameter in feet times 3.1416.

(2) Cylindrical container with other than hemispherical heads:

Area = (overall length in feet plus 0.3 outside diameter in feet) times outside diameter in feet times 3.1416.

(3) Spherical container:

Area = outside diameter in feet squared times 3.1416."

"Flow Rate – CFM Air = cubic feet per minute of air required at standard conditions, 60 degrees F. and atmospheric pressure (14.7 p.s.i.a.)."

"The rate of discharge may be interpolated for intermediate values of surface area. For containers with total outside surface area greater than 2,500 square feet, the required flow rate can be calculated using the formula: Flow Rate CFM Air = 22.11 A082, where A = outside surface area of the container in square feet."

(h) Safety relief devices.

(A) Every container in systems covered by **OAR 437-004-0800(4)**, **(7)**, **(8)** and **(9)** must have one or more safety relief valves of the spring-loaded or equivalent type. The discharge from safety-relief valves must vent away from the container, upward and unobstructed to the atmosphere. All relief-valve discharge openings must have suitable rain caps that allow free discharge of the vapor and prevent entrance of water. Accumulated condensation must drain away. The rate of the discharge must comply with Table 1.

(B) Container safety-relief valves must be set to start-to-discharge as follows, with relation to the design pressure of the container:

Containers	Minimum (percent)	Maximum (percent)
ASME-U-68, U-69	110	125
ASME-U-200, U-202	95	100
ASME 1959, 1956, 1952 or 1962	95	100
API-ASME	95	100
U.S. Coast Guard	95	100

(C) Safety relief devices in systems covered by **OAR 437-004-0800(4)**, **(7)**, **(8)** and **(9)** must discharge at not less than the rates in **(3)(h)(A)** above before the pressure is in excess of 120 percent (not including the 10 percent tolerance in **(3)(h)(B)** above) of the maximum permitted start-to-discharge pressure setting of the device.

(D) Arrange safety relief valves to minimize the possibility of tampering. If the pressure setting adjustment is external, the relief valves must have a means of sealing the adjustment.

(E) Shutoff valves must not be between the safety relief valves and the container; except, that a shutoff valve may be where the arrangement of this valve is such as to always afford full required capacity flow through the relief valves.

(F) Safety relief valves must have direct communication with the vapor space of the container.

(G) Each container safety relief valve used with systems covered by **OAR 437-004-0800(4)**, **(7)**, **(8)** and **(9)** must have plain and permanent markings with the symbol "NH3" or "AA"; with the pressure in pounds-per-square-inch at which the valve is set to start-to-discharge; with the actual rate of discharge of the valve at its full open position in cubic feet per minute of air at 60 degrees F. and atmospheric pressure; and the manufacturer's name and catalog number.

Example: "NH3 250-4050 Air" indicates that the valve is suitable for use on an anhydrous ammonia container, is set to start-to-discharge at a pressure of 250 p.s.i.g., and that its rate of discharge at full open position is 4,050 cubic feet per minute of air.

(H) There must be no connection on either the upstream or downstream side that restricts the flow capacity of the relief valve.

(I) A hydrostatic relief valve must be between each pair of valves in the liquid ammonia piping or hose to relieve into the atmosphere at a safe location.

(i) General.

(A) All stationary storage installations must have at least two readily accessible suitable gas masks. Full face masks with ammonia canisters, not cartridges, approved by the National Institute for Occupational Safety and Health (NIOSH), are suitable for emergency action for most leaks, particularly those that are outdoors. For protection in concentrated ammonia atmospheres the use of self-contained breathing air apparatus is mandatory. Refer to OAR 437-004-1041 Respiratory Protection 4/I for additional requirements for personal protective equipment.

(B) Stationary storage installations must have an easily accessible shower or a 50-gallon drum of water.

(C) Each vehicle transporting ammonia in bulk except farm applicator vehicles must carry a container of at least 5 gallons of water and a full face mask.

(j) Charging of containers.

(A) The filling densities for unrefrigerated containers must not be more than the following:

Containers	Percent by Weight	Percent by Volume
Aboveground – Uninsulated	56	82
Aboveground – Uninsulated		87.5
Aboveground – Insulated	57	83.5
Underground – Uninsulated	58	85
DOT – In accord with DOT regulations		

(B) Aboveground uninsulated containers may be charged 87.5 percent by volume if the temperature of the anhydrous ammonia being charged is not lower that 30 degrees F. or if the charging of the container stops at the first indication of frost or ice formation on its outside surface and does not resume until the frost or ice is gone.

(k) Transfer of liquids.

(A) Anhydrous ammonia must always be at a temperature suitable for the material of construction and the design of the receiving container.

(B) The employer must require the continuous presence of an attendant in the vicinity of the operation during ammonia transfer.

(C) Charge and use containers only with authorization of the owner.

(D) Gage and charge containers only in the open atmosphere or in buildings or areas for that purpose.

(E) Pumps used for transferring ammonia must be made for that purpose.

(i) Pumps must be designed for at least 250 p.s.i.g. working pressure.

(ii) Positive displacement pumps must have, installed off the discharge port, a constant differential relief valve discharging into the suction port of the pump through a line of sufficient size to carry the full capacity of the pump at relief valve setting, which setting and installation must be according to the pump manufacturer's recommendations.

(iii) On the discharge side of the pump, before the relief valve line, there must be a pressure gage graduated from 0 to 400 p.s.i.

(iv) Plant piping must have shutoff valves as close as practical to pump connections.

(F) Compressors for transferring or refrigerating ammonia must be recommended for ammonia service by the manufacturer.

(i) Compressors must be designed for at least 250 p.s.i.g. working pressure.

(ii) Plant piping must have shutoff valves located as close as practical to compressor connections.

(iii) A relief valve large enough to discharge the full capacity of the compressor must be connected to the discharge before the shutoff valve.

(iv) Compressors must have pressure gages at suction and discharge graduated to at least 1 1/2 times the maximum pressure.

(v) Adequate means, such as a drainable liquid trap, must be on the compressor suction to minimize the entry of liquid into the compressor.

(G) In case the hose breaks, loading and unloading systems must have suitable devices to prevent emptying of the storage or supply container. Backflow check valves or properly sized excess flow valves must be where necessary to provide this protection. If such valves are not practical, remotely operated shutoff valves may are acceptable.

(l) Tank car unloading points and operations.

(A) Unloading of tank cars must conform to the applicable recommendations in DOT regulations.

(B) The employer must insure that unloading operations are done by reliable persons properly instructed and with the authority to monitor careful compliance with all applicable procedures.

(C) Caution signs must be on the track or car to give warning to people approaching the car from the open end or ends of the siding. They must be left up until after the car is empty and disconnected from discharge connections. Signs must be metal or other suitable material, at least 12 inches by 15 inches and bear the words “STOP – Tank Car Connected” or “STOP – Men at Work” the word, “STOP,” being in letters at least 4 inches high and the other words in letters at least 2 inches high.

(D) The track of a tank car siding must be substantially level.

(E) Set the brakes and block the wheels on cars during unloading.

(m) Liquid-level gaging device.

(A) Each container except those filled by weight must have an approved liquid-level gaging device. A thermometer well must be in containers without a fixed liquid-level gaging device.

(B) All gaging devices must be arranged so that the maximum liquid level to which the container is filled is readily determined.

(C) Gaging devices that require bleeding of the product to the atmosphere such as the rotary tube, fixed tube, and slip tube devices must have a maximum opening of the bleed valve not larger than .0550-inch unless they have an excess flow valve. (This requirement does not apply to farm vehicles used for the application of ammonia as in **OAR 437-004-0800(9)**.)

(D) Gaging devices must have a design pressure equal to or greater than the design pressure of their host container.

(E) Fixed tube liquid-level gages must indicate the container’s 85 percent fill level of its water capacity.

(F) Use columnar gage glasses only on stationary storage installations. They must have shutoff valves with metallic handwheels, excess-flow valves and extra heavy glass adequately protected with a metal housing applied by the gage manufacturer. They must be shielded from the direct rays of the sun.

(n) Electrical equipment and wiring.

(A) Electrical equipment and wiring for use in ammonia installations must be general purpose or weather resistant as appropriate.

(B) Electrical systems must comply with 4/S.

(4) Systems using stationary, non-refrigerated storage containers.

(a) Applies to all storage containers except portable DOT containers.

(A) The minimum design pressure and construction for non-refrigerated containers is 250 p.s.i.g.

(B) Each filling connection must have a combination back-pressure check valve and excess-flow valve; one double or two single back-pressure check valves; or a positive shutoff valve in conjunction with either an internal back-pressure check valve or an internal excess flow valve.

(C) All liquid and vapor connections to containers except filling pipes, safety relief connections, and liquid-level gaging and pressure gage connections with orifices not larger than .0550-inch required in **OAR 437-004-0800(3)(e)(D)** and **(E)** must have excess-flow valves.

(D) Each storage container must have a pressure gage graduated from 0 to 400 p.s.i. Gages must be designated for use in ammonia service.

(E) All containers must have vapor return valves.

(b) Safety-relief devices.

(A) Every container must have one or more safety-relief valves of the spring-loaded or equivalent type according to **OAR 437-004-0800(b)(9)**.

(B) The rate of discharge of spring-loaded safety relief valves on underground containers may be a minimum of 30 percent of the rate of discharge in Table 1. After installation, do not uncover containers with this protection until empty of liquid ammonia. Consider containers that may contain liquid ammonia before being installed underground and before being completely covered with earth to be aboveground containers when determining the rate of discharge requirements of the safety-relief valves.

(C) On underground installations where there is a probability of the manhole or housing becoming flooded, the discharge from vent lines must be above the high water level. All manholes or housings must have ventilated louvers or their equivalent, the area which equal or exceed the combined discharge areas of safety-relief valves and vent lines that discharge their content into the manhole housing.

(D) Do not restrict vent pipes. They may not be a smaller diameter than the relief-valve outlet connection.

(E) Vent pipes from two or more safety-relief devices on the same unit, or similar lines from two or more different units may run into a common discharge header, if the capacity of the header is at least equal to the sum of the capacities of the individual discharge lines.

(c) Reinstallation of containers.

(A) Containers that were installed underground must not be reinstalled aboveground or underground, unless they withstand hydrostatic pressure retests at their original rating required by the code under which they were made. They must show no serious corrosion.

(B) Containers reinstalled aboveground, must have safety devices or gaging devices that comply with **OAR 437-004-0800(i)** and this paragraph respectively for aboveground containers.

(d) Installation of storage containers.

(A) Aboveground containers, except as in **(4)(d)(E)** below must have substantial concrete or masonry supports, or structural steel supports on firm concrete or masonry foundations. All foundations must extend below the frost line.

(B) Horizontal aboveground containers must be on foundations that permit expansion and contraction. Containers must have supports that prevent the concentration of excessive loads on the supporting portion of the shell. That part of the container in contact with foundations or saddles must have corrosion protection.

(C) The top of underground containers must be below the frost line and at least 2 feet below the surface. If ground conditions make compliance with these requirements impracticable, installation methods must prevent physical damage. It is not necessary to cover the part of the container where there are manhole and other connections. Anchor or weight containers when necessary to prevent floating.

(D) Underground containers must be on a firm foundation (firm earth is OK) and surrounded with compacted earth or sand. The container must have a corrosion resisting protective coating. This coating must remain undamaged when placing the container into the ground.

(E) Containers with foundations (portable or semi-portable tank containers with suitable steel “runners” or “skids” and commonly known in the industry as “skid tanks”) must comply with **OAR 437-004-0800(4)(a)(A)**.

(F) There must be secure anchorage or adequate pier height to prevent container flotation where high flood water might occur.

(G) The distance between underground containers of over 2,000 gallons capacity must be at least 5 feet.

(e) Protection of appurtenances.

(A) Protect valves, regulators, gages and other appurtenances against tampering and physical damage. This also applies during transit of containers.

(B) All connections to underground containers must be within a dome, housing, or manhole and with access by means of a substantial cover.

(f) Damage from vehicles. Protect ammonia systems from vehicle damage.

(5) Refrigerated storage systems.

(a) Container design.

(A) The design temperature must be the minimum temperature to which the container will be refrigerated.

(B) Containers with a design pressure more than 15 p.s.i.g. must comply with **OAR 437-004-0800(3)(b)**, and the materials must be from those in API Standard 620, Recommended Rules for Design and Construction of Large, Welded, Low-Pressure Storage Tanks, Fourth Edition, 1970, Tables 2.02, R2.2, R2.2(A), R2.2.1, or R2.3.

(C) Containers with a design pressure of 15 p.s.i.g. and less must comply with the applicable requirements of API Standard 620 including its Appendix R.

(D) Use the Code as a guide to select austenitic steels or non-ferrous materials to build containers for use at the design temperature.

(E) The filling density for refrigerated storage containers must be such that the container will not be liquid full at a liquid temperature corresponding to the vapor pressure at the start-to-discharge pressure setting of the safety-relief valve.

(b) Installation.

(A) Containers must be on suitable non-combustible foundations.

(B) There must be adequate protection against flotation or other water damage where high flood water might occur.

(C) Containers for product storage at less than 32 degrees F. must have protection from freezing and consequent frost heaving.

(c) Shutoff valves. When operating conditions make it advisable, there must be a check valve on the fill connection and a remotely operated shutoff valve on other connections below the maximum liquid level.

(d) Safety relief devices.

(A) Set safety relief valves to start-to-discharge at a pressure not more than the design pressure of the container. The valves must prevent a maximum pressure in the container of more than 120 percent of the design pressure. Relief valves for refrigerated storage containers must be self-contained spring-loaded, weight-loaded, or self-contained pilot-operated type.

(B) The total relieving capacity must be the larger of:

(i) Possible refrigeration system upset such as (1) cooling water failure, (2) power failure, (3) instrument air or instrument failure, (4) mechanical failure of any equipment, (5) excessive pumping rates.

(ii) Fire exposure determined by Compressed Gas Association (CGA) S-1, Part 3, Safety Relief Device Standards for Compressed Gas Storage Containers, 1959, except that "A" must be the total exposed surface area in square feet up to 25 feet above grade or to the equator of the storage container if it is a sphere, whichever is greater. If the relieving capacity required for fire exposure is greater than that required by **OAR 437-004-0800(a)**, the additional capacity may be provided by weak roof to shell seams in containers operating at essentially atmospheric pressure and having an inherently weak roof-to-shell seam. The weak roof-to-shell seam is not to provide any of the capacity required in **OAR 437-004-0800(a)**.

(C) If vent lines conduct the vapors from the relief valve, the back pressure under full relieving conditions must not be more than 50 percent of the start-to-discharge pressure for pressure balanced valves or 10 percent of the start-to-discharge pressure for conventional valves. The vent lines must prevent accumulation of liquid in the lines.

(D) The valve or valve installation must provide weather protection.

(E) Atmospheric storage must have vacuum breakers. Ammonia gas, nitrogen, methane, or other inert gases are acceptable to provide a pad.

(e) Protection of container appurtenances. Protect appurtenances against tampering and physical damage.

(f) Reinstallation of refrigerated storage containers. When reinstalling containers that require field fabrication, reconstruct and reinspect them according to their original construction requirements. Pressure retest the containers and if rerating is necessary, it must comply with applicable requirements.

(g) Damage from vehicles. Protect containers from damage by vehicles.

(h) Refrigeration load and equipment.

(A) Compute the total refrigeration load as the sum of the following:

(i) Load imposed by heat flow into the container caused by the temperature differential between design ambient temperature and storage temperature.

(ii) Load imposed by heat flow into the container caused by maximum sun radiation.

(iii) Maximum load imposed by filling the container with ammonia warmer than the design storage temperature.

(B) A single refrigeration system may serve more than one storage container.

(i) Compressors.

(A) There must be a minimum of two compressors either of which must be large enough to handle the loads. Where there are more than two compressors, there must be minimum standby equipment equal to the largest normally operating equipment. Filling compressors are acceptable as standby equipment for holding compressors.

(B) Compressors must be able to operate with a suction pressure at least 10 percent below the minimum setting of the safety valve(s) on the storage container and must withstand a suction pressure at least equal to 120 percent of the design pressure of the container.

(j) Compressor drives.

(A) Each compressor must have its individual driving unit.

(B) There must be an emergency power source that can handle the loads unless facilities are available to safely dispose of vented vapors while the refrigeration system is not operating.

(k) Automatic control equipment.

(A) The refrigeration system must have suitable controls to govern the compressor operation.

(B) There must be an emergency alarm system to function in case the container pressure rises to the maximum allowable operating pressure.

(C) An emergency alarm and shut-off must be in the condenser system to respond to excess discharge pressure caused by failure of the cooling medium.

(D) All automatic controls must be prevent operation of alternate compressors unless the controls will function with the alternate compressors.

(l) Separators for compressors. An entrainment separator of suitable size and design pressure must be in the compressor suction line of lubricated compression. The separator must have a drain and gaging device.

(m) Condensers. The condenser system may be air or water cooled or both. The condenser must have minimum design pressure of at least 250 p.s.i.g. There must be a way to purge noncondensibles either manually or automatically.

(n) Receiver and liquid drain. A receiver must have a liquid-level control to discharge the liquid ammonia to storage. The receiver must be able to operate at least 250 p.s.i.g. and have the necessary connections, safety valves, and gaging device.

(o) Insulation. Insulated refrigerated containers and pipelines must have covers of a material of suitable quality and thickness for the temperatures. Weatherproofing must be flame retardant.

(6) Systems using portable DOT containers.

(a) Cylinders must comply with DOT specifications and must comply with 49 CFR Chapter I and Marking Portable Compressed Gas Containers to Identify the Material Contained, ANSI Z48.1-1954 (R1970).

(b) Store cylinders in an area free from ignitable debris and in such manner as to prevent external corrosion. Storage may be indoors or outdoors.

(c) Cylinders filled according to DOT regulations will become liquid full at 145 degrees F. Protect cylinders from heat sources such as radiant flame and steam pipes. Do not apply heat directly to cylinders to raise the pressure.

(d) Store cylinders in a way that protects them from vehicles or external damage.

(e) Any cylinder designed to have a valve protection cap must have the cap securely in place when the cylinder is not in service.

(7) Tank motor vehicles for the transportation of ammonia.

(a) This paragraph applies to containers and equipment on tank motor vehicles including semitrailers and full trailers used to transport ammonia. This paragraph does not apply to farm vehicles. For requirements covering farm vehicles, refer to **OAR 437-004-0800 (8)** and **(9)**. Paragraph **(b)** below applies to this paragraph unless otherwise noted. Containers and pertinent equipment for tank motor vehicles for the transportation of anhydrous ammonia, must also comply with DOT requirements.

(b) Design pressure and construction of containers.

(A) The minimum design pressure for containers must comply with DOT regulations.

(B) The shell or head thickness of containers must be at least 3/16-inch.

(C) All container openings, except safety relief valves, liquid-level gaging devices, and pressure gages, must have labels that designate whether they communicate with liquid or vapor space.

(c) Container appurtenances.

(A) Protect appurtenances from physical damage.

(B) All connections to containers, except filling connections, safety relief devices, and liquid-level and pressure gage connections, must have suitable automatic excess flow valves, or may have quick-closing internal valves, that must remain closed except during delivery operations. The control mechanism for such valves may have a secondary control remote from the delivery connections and such control mechanism must have a fusible section (melting point 208 degrees F. to 220 degrees F.) that permits the internal valve to close automatically in case of fire.

(C) Filling connections must have automatic back-pressure check valves, excess-flow valves, or quick-closing internal valves, to prevent back-flow in case the filling connection breaks. You do not need an automatic valve where the filling and discharge connect to a common opening in the container shell and that opening has a quick-closing internal valve as in **OAR 437-004-0800(f)(3)(ii)**.

(D) All containers must be capable of spray loading (filling in the vapor space) or with an approved vapor return valve of adequate capacity.

(d) Piping and fittings.

(A) Securely mount all piping, tubing, and fittings and protect them from damage. Protect hoses while the vehicle is moving.

(B) Fittings must comply with **OAR 437-004-0800(3)(e)**. Pipe must be Schedule 80.

(e) Safety relief devices.

(A) The discharge from safety relief valves must vent upward away from the container and to the open air in such a manner as to prevent any impingement of escaping gas. Use loose-fitting rain caps. Size of discharge lines from safety valves must not be smaller than the nominal size of the safety-relief valve outlet connection. Condensate that accumulates in the discharge pipe must drain off.

(B) Any part of liquid ammonia piping that may close at both ends must have a hydrostatic relief valve.

(f) Transfer of liquids.

(A) Determine the content of tank motor vehicle containers by weight, by a suitable liquid-level gaging device, or other approved methods. If using a liquid-level measurement, the container must have a thermometer well. This volume when converted to weight must not be more than the filling density specified by the DOT.

(B) Any pump, except a constant speed centrifugal pump, must have a suitable pressure actuated bypass valve permitting flow from discharge to suction when the discharge pressure rises above a pre-determined point. Pump discharge must also have a spring-loaded safety relief valve set at a pressure not more than 135 percent of the setting of the bypass valve or more than 400 p.s.i.g., whichever is larger.

(C) Compressors must have manually operated shutoff valves on both suction and discharge connections. Pressure gages of bourdon-tube type must be on the suction and discharge of the compressor before the shutoff valves. The compressor must not operate if either pressure gage is removed or is inoperative. A spring-loaded, safety-relief valve capable of discharging to atmosphere the full flow of gas from the compressor at a pressure not more than 300 p.s.i.g. must be between the compressor discharge and the discharge shutoff valve.

(D) Valve functions have clear and legible identification by metal tags or nameplates permanently affixed to each valve.

(g) Full trailers and semitrailers.

(A) Securely attach full trailers to the vehicle drawing them with suitable drawbars and a safety chain (or chains) or safety cables.

(B) Every full trailer or semitrailer must have reliable brakes that operate from the driver's seat.

(C) Every full trailer must have self-energizing brakes.

(D) Full trailers must follow substantially in the path of their towing vehicle and will not whip or swerve dangerously from side to side.

(E) Where using a fifth wheel, securely fasten it to both units, and use a positive locking mechanism that prevents separation of the two units except by manual release.

(h) Protection against collision. Each tank motor vehicle must have properly attached bumpers or chassis extension that protects the tank, piping, valves, and fittings from physical damage.

(i) Chock blocks. There must be at least two chock blocks. Use these blocks to prevent rolling during loading and unloading.

(j) Portable tank containers (skid tanks). Where these tanks are for farm storage they must comply with **OAR 437-004-0800(4)(a)(A)**. When portable tank containers substitute for cargo tanks and are permanently on tank motor vehicles for the transportation of ammonia, they must comply with the requirements of this paragraph.

(8) Systems on farm vehicles other than for the application of ammonia.

(a) Application. This paragraph applies to containers of 1,200 gallons capacity or less and equipment on farm vehicles (implements of husbandry) not used to apply ammonia to the soil. **OAR 437-004-0800(4)** applies unless otherwise noted.

(b) Design pressure and classification of containers.

(A) The minimum design pressure for containers is 250 p.s.i.g.

(B) Container shell or head thickness must be at least 3/16-inch.

(c) Mounting containers.

(A) A suitable “stop” or “stops” must be on the vehicle or on the container so that the container does not be come loose from its mounting.

(B) At one or more places on each side of the container, a “hold down” device must anchor the container to the vehicle.

(C) When containers are on four-wheel trailers, the weight must be even over both axles.

(d) Container appurtenances.

(A) All containers must have a fixed liquid-level gage.

(B) All containers with a capacity more than 250 gallons must have a pressure gage with a dial graduated from 0-400 p.s.i.

(C) The filling connection must have a combination back-pressure check valve and excess-flow valve; one double or two single back-pressure check valves; or a positive shutoff valve in conjunction with either an internal back-pressure check valve or an internal excess flow valve.

(D) All containers with a capacity more than 250 gallons must be equipped for spray loading or have an approved vapor return valve.

(E) All vapor and liquid connections except safety-relief valves and those specifically exempted in ANSI K61.1-1966, must have approved excess-flow valves or quick-closing internal valves that, except during operating periods, must be closed.

(F) Fittings must have protection from damage by a metal box or cylinder with an open top fastened to the container or by rigid guards welded to the container on both sides of the fittings or by a metal dome. If there is a metal dome, the relief valve must vent through the dome.

(G) If there is a liquid withdrawal line in the bottom of a container, its connections, including hose, must not be lower than the lowest horizontal edge of the vehicle axle.

(H) Secure both ends of the hose while in transit.

(e) Marking the container. The words, **"Caution – Ammonia"** must be on each side and the rear end of the container in letters at least 4 inches high or its markings must comply with DOT regulations.

(f) Farm vehicles. All vehicles must carry a container of at least 5 gallons of water for washing ammonia from the skin.

(9) Systems on farm vehicles for the application of ammonia.

(a) This applies to systems using containers of 250 gallons capacity or less on farm vehicles (implements of husbandry) used to apply ammonia to the soil. **OAR 437-004-0800(4)** applies unless otherwise noted. Larger containers must comply with ANSI K61.1-1966.

(b) Design pressure and classification of containers.

(A) The minimum design pressure for containers is 250 p.s.i.g.

(B) The shell or head thickness of a container is less than 3/16-inch.

(c) Mounting of containers. All containers and flow-control devices must have secure mountings.

(d) Container valves and accessories.

(A) Each container must have a fixed liquid-level gage.

(B) The filling connection must have a combination back-pressure check valve and an excess-flow valve; one double or two single back-pressure check valves: or a positive shut-off valve in conjunction with an internal back-pressure check valve or an internal excess-flow valve.

(C) You can fill the applicator tank by venting to open air if the bleeder valve orifice is not more than 7/16-inch in diameter.

(D) Regulation equipment may connect directly to the tank coupling or flange only with a flexible connection between the regulating equipment and the rest of the liquid withdrawal system. Otherwise, connect the regulating equipment flexibly to the container shutoff valve.

(E) There need be no excess flow valve in the liquid withdrawal line if the controlling orifice between the contents of the container and the outlet of the shutoff valve is not more than 7/16-inch in diameter.

Stat. Auth.: ORS 654.025(2) and 656.726(4).
Stats. Implemented: ORS 654.001 through 654.295.
Hist: OR-OSHA Admin. Order 4-1998, f/8/28/98, ef. 10/1/98.
OR-OSHA Admin. Order 9-2006, f. 9/22/06, ef. 9/22/06.

437-004-0950 Hazardous Waste Operations and Emergency Response. (HAZWOPER)

(1) If an agricultural employer requires employees to respond to an emergency release of a hazardous chemical with a reasonable possibility for employee exposure to safety or health hazards, that response activity must be in compliance with the applicable sections of Division 2/H, 1910.120, Hazardous Waste Operations and Emergency Response.

(2) Agricultural employers whose activities include clean-up operations involving hazardous waste, including those conducted at a treatment, storage, and disposal (TSD) facility, are subject to the applicable requirements in Division 2/H, 1910.120, Hazardous Waste Operations and Emergency Response.

NOTES:

There are two primary considerations for most agricultural employers to determine if the HAZWOPER rules apply to you:

(1) Do you expect your employees to respond to spills of hazardous chemicals in a way that involves a reasonable possibility of exposure to safety or health hazards? (If NO, the HAZWOPER rules do not apply.)

(2) If YES, would your employees respond only to an incidental release of a hazardous chemical; or, to an emergency release of a hazardous chemical?

(a) IF you expect your employees to respond only to an incidental release (defined as a situation where the spilled substance can be absorbed, neutralized, or otherwise controlled at the time of release by employees in the immediate area, or by maintenance personnel;) and there is no potential safety or health hazard (such as fire, explosion, or chemical exposure;) THEN, the HAZWOPER RULES DO NOT APPLY. However, you must train and equip employees who are expected to respond to incidental releases to safely handle that type of non-routine task as required by Division 4/Z, 437-004-9800, Hazard Communication Standard for Agricultural Employers.)

(b) IF you expect your employees to respond to an emergency release (defined as an occurrence that results in, or is likely to result in an uncontrolled release of a hazardous substance; or, a situation that requires a response effort by employees from outside the immediate release area, or by other designated responders such as mutual-aid groups or local fire departments;) THEN, the HAZWOPER RULES APPLY. Agricultural employers who expect their employees to respond to these types of emergencies are required to follow the sections in the HAZWOPER rules that apply to emergency releases “without regard to the location of the hazard.” (See Division 2/H, 1910.120(q) Emergency responses to hazardous substance releases.)

The best source of information about any chemical in the workplace (including recommended personal protective equipment and procedures for spill-response) is often the chemical’s Safety Data Sheet (SDS).

Stat. Auth.: ORS 654.025(2) and 656.726(4).
Stats. Implemented: ORS 654.001 through 654.295.
Hist: OR-OSHA Admin. Order 4-1998, f/8/28/98, ef. 10/1/98.
OR-OSHA Admin. Order 3-2014, f. 8/8/14, ef. 8/8/14.

– END OF DOCUMENT –

TABLE OF CONTENTS

437-004-1005 General Requirements for Protective Equipment I-1
(1) Definitions I-1
(2) Hazard assessment and protective equipment selection I-1
(3) Payment for protective equipment I-1
(4) Employees' equipment I-2
(5) Equipment inspection, maintenance, and storage I-2
(6) Skin protection I-2
(7) Follow manufacturer's instruction I-2
(8) Watches and jewelry I-2
(9) Control hazards first I-2
(10) Training I-3

437-004-1020 Personal Fall Protection I-4

437-004-1030 Work Clothing I-6
(1) General requirements I-6

437-004-1035 Eye and Face Protection I-7
(1) General requirements I-7
(2) Criteria for protective eye and face devices I-7

437-004-1041 Respiratory Protection I-8
(1) Permissible practice I-8
(2) Definitions I-8
(3) Respiratory protection program I-11
(4) Selection of respirators I-12
(5) Medical evaluation I-15
(6) Fit testing I-17
(7) Use of respirators I-18
(8) Maintenance and care of respirators I-20
(9) Breathing air quality and use I-22
(10) Identification of filters, cartridges, and canisters I-23
(11) Training and information I-24
(12) Program evaluation I-24
(13) Recordkeeping I-25
(14) Appendices I-25
(15) Effective Date I-26
Appendix A to OAR 437-004-1041, Respiratory Protection – Fit Testing Procedures (Mandatory) I-27
Appendix B-1 to OAR 437-004-1041, Respiratory Protection – User Seal Check Procedures (Mandatory) I-47
Appendix B-2 to OAR 437-004-1041, Respiratory Protection – Respirator Cleaning Procedures (Mandatory) I-49
Appendix C to OAR 437-004-1041, Respiratory Protection – Respirator Medical Evaluation Questionnaire (Mandatory) I-51
Apéndice C de OAR 437-004-1041, Protección de la Respiración Cuestionario Para Evaluacion Medica Respiratoria (Obligatorio) I-59
Appendix D to OAR 437-004-1041, Information for Employees Voluntarily Using Respirators (Mandatory) I-67
Apéndice D to OAR 437-004-1041 – Información para Trabajadores que Usan Respiradores Voluntariamente (Obligatorio) I-69

437-004-1050 Head Protection I-71
(1) General requirements I-71
(2) Criteria for protective headwear I-71

437-004-1060 Hand, Foot, and Extremity Protection I-71
(1) General requirements for hand protection I-72
(2) General requirements for protective footwear I-72
(3) Protection of extremities I-72

437-004-1070 Working Underway on Water I-73
(1) Definitions I-73
(2) Personal flotation devices I-73

437-004-1075 Working Over or in Water I-74
(1) Definition I-74
(2) Scope and Application I-74
(3) Personal flotation and rescue devices I-74

Appendix A to Subdivision 4/I (Nonmandatory) – Sample Hazard Assessment for Personal Protective Equipment (PPE) I-75

437-004-1005 General Requirements for Protective Equipment.

(1) Definitions.

Contaminants – include any substance that can cause illness or physical harm to a person by contact with or entry into the body. Examples include dust in the air and pesticide residues in water.

Hazards – include chemicals, contaminants, and energy sources that are present in the workplace environment in a way that can cause injury to, or functional impairment of, any part of the body through absorption, inhalation or physical contact.

Personal protective equipment (PPE) – includes anything worn or used for protecting a person from hazards.

(2) Hazard assessment and protective equipment selection.

NOTE: This section applies to protective equipment not covered in OAR 437-004-1041 (Respiratory Protection) or OAR 437-004-0630 (Noise Exposure).

(a) The employer must assess the workplace to determine if hazards are present, or are likely to be present, that would make the use of personal protective equipment (PPE) necessary to protect employees.

(b) If such hazards are present, or likely to be present, the employer must:

(A) Select, and ensure that each exposed employee use, the types of PPE that will protect them from the hazards identified in the hazard assessment;

(B) Communicate PPE selection decisions to each exposed employee; and,

(C) Select PPE that properly fits each exposed employee.

NOTE: Nonmandatory Appendix A to Subdivision I provides a sample hazard assessment procedure.

(3) Payment for protective equipment.

(a) Except as in paragraphs (3)(b) through (3)(e), employers must provide, at no cost to the employee, all protective equipment, including personal protective equipment (PPE). For purposes of this rule, employees of labor contractors, labor leasing companies and temporary labor providers are the employees of the using employer. The using employer must supply PPE in compliance with this rule.

Note: When another Oregon OSHA standard specifies that the employer must pay for protective equipment, that standard applies over this one.

(b) Employers do not have to pay for non-specialty safety-toe protective footwear (including steel-toe shoes or steel-toe boots) and non-specialty prescription safety eyewear, if the employer allows employees to wear the items off the job site.

(c) When employers provide metatarsal guards and allow the employee, to use shoes or boots with built-in metatarsal protection, employers do not have to reimburse the employee for the shoes or boots.

(d) Employers do not have to pay for:

(A) Everyday clothing, such as long-sleeve shirts, long pants, street shoes, and normal work boots; or

(B) Ordinary clothing, skin creams, or other items, used solely for protection from weather, such as winter coats, jackets, gloves, parkas, rubber boots, hats, raincoats, ordinary sunglasses, and sunscreen.

(e) Employers must pay for replacement PPE, except when the employee has lost or intentionally damaged the PPE.

NOTE: Employees must not be allowed to work in hazardous conditions without the appropriate PPE.

(f) Where an employee provides their own protective equipment the employer does not have to reimburse the employee for that equipment. (Also see paragraph (4))

(4) Employees' equipment. If employees provide their own protective equipment, the employer is responsible to ensure that it is adequate and is right for the job and hazards.

(5) Equipment inspection, maintenance, and storage. Do not allow workers to use defective or damaged personal protective equipment. All protective equipment, whether furnished by the employer or provided by the employee, must be maintained in a sanitary and reliable condition.

(6) Skin protection. Where needed, provide and require the use of protective coverings, such as aprons, ointments, gloves or other effective protection to employees exposed to materials or conditions that are hazardous to their skin.

(7) Follow manufacturer's instruction. Require employees to wear and use personal protective equipment according to the manufacturer's instructions.

(8) Watches and jewelry. Employees working where they might contact moving parts of powered machinery or live parts of electrical equipment, must not be allowed to wear rings, watches, earrings, bracelets or other things that could cause a hazard.

(9) Control hazards first. Contain or eliminate hazards at the source by using administrative or engineering controls. Personal protective equipment is appropriate when these types of controls are not feasible or where there are still hazards.

(10) Training.

NOTE: This section applies to protective equipment not covered in OAR 437-004-1041 (Respiratory Protection) or OAR 437-004-0630 (Noise Exposure).

(a) The employer must provide training to each employee who is required to use Personal Protective Equipment (PPE), that includes at least the following:

(A) When PPE is necessary;

(B) What type of PPE is necessary;

(C) How to properly put on, take off, adjust, and use the PPE;

(D) The limitations and useful life of the PPE; and,

(E) The proper care, maintenance, storage and disposal of the PPE.

(b) Each affected employee must demonstrate an understanding of the training specified in paragraph (10)(a) of this section, and the ability to use PPE properly, before being allowed to perform work requiring the use of PPE.

(c) When the employer has reason to believe that any affected employee who has already been trained does not have the understanding and skill required by paragraph (10)(a) of this section, the employer must retrain that employee. Circumstances where retraining is required include:

(A) When changes in the workplace make previous training obsolete;

(B) When changes in the types of PPE to be used make previous training obsolete;

(C) When deficiencies in an affected employee's demonstrated knowledge or use of assigned PPE indicate that the employee has not retained the required understanding or skill.

Stat. Auth.: ORS 654.025(2) and 656.726(4).
Stats. Implemented: ORS 654.001 through 654.295.
Hist: OR-OSHA Admin. Order 4-1998, f/8/28/98, ef. 10/1/98.
OR-OSHA Admin. Order 5-2008, f. 5/1/08, ef. 5/15/08.
OR-OSHA Admin. Order 4-2012, f. 9/19/12, ef. 1/1/13.

437-004-1020 Personal Fall Protection.

NOTE: The general requirements for Protective Equipment in 437-004-1005 apply to Personal Fall Protection.

(1) Definitions.

Competent person – is a person who because of training and experience, can identify existing and predictable hazards in equipment, material, conditions or practices and who has the knowledge and authority to take corrective steps.

Lanyard – A flexible line connected at one end to a body belt or harness and at the other end to an anchorage.

Personal fall arrest system means a system used to stop an employee in a fall from a working level. It consists of an anchorage, connectors, body harness and may include a lanyard, deceleration device, lifeline, or suitable combinations of these.

Personal fall protection systems include arrest systems, restraint systems or positioning device systems.

Personal fall restraint system means a fall protection system that prevents the user from falling any distance. The system is comprised of either a body belt or body harness, along with an anchorage, connectors and other necessary equipment. The other components typically include a lanyard, and may also include a lifeline and other devices.

Positioning device system means a body belt or body harness system rigged to allow an employee to be supported on an elevated vertical surface, such as a wall, and work with both hands free while leaning.

Qualified person – is a person who has a recognized degree, certification, professional standing, knowledge, training or experience; and has successfully demonstrated the ability to perform the work, or solve or resolve problems relating to the work, subject matter, or project.

(2) Protect all employees from falls when working:

(a) On unguarded surfaces more than 10 feet above a lower level; and

(b) Above open pits, tanks or dangerous equipment at any height.

NOTE: The requirements to protect employees from falls when working on unguarded surfaces more than 10 feet above a lower level does NOT apply when the work is of limited duration and limited exposure, and it is equally or more hazardous to set up or use a fall protection system. Examples include work on haystacks, stacked silage, and stacked Christmas trees in open, outdoor areas.

(3) Personal fall protection systems must use:

(a) Lanyards and vertical lifelines that have a minimum breaking strength of 5,000 pounds.

(b) Connectors that are drop forged, pressed or formed steel, or equivalent materials.

(c) Connectors that have a corrosion-resistant finish, and with smooth surfaces and edges to prevent damage to interfacing parts of the system.

(d) Dee-rings, snap hooks or carabiners that have a minimum tensile strength of 5,000 lbs. and that are proof-tested to a minimum tensile load of 3,600 pounds without cracking, breaking, or taking permanent deformation.

(e) Snap hooks and carabiners that are self-locking or double-locking and sized to be compatible with the member to which they are connected.

(4) Use lifelines, body belts or safety harnesses and lanyards only for the purpose they were intended. Remove fall protection equipment from service after it has been subjected to a load.

(5) Anchorages:

(a) Anchorages used for attachment of personal fall arrest equipment must be capable of supporting at least 5,000 pounds per employee attached, or must be designed, installed, and used as follows:

(A) Under the supervision of a qualified person; and

(B) As part of a complete personal fall arrest system which maintains a safety factor of at least two.

(b) Anchorages used for attachment of personal fall restraint or positioning device systems must be capable of supporting 3000 lbs. per employee attached, or be designed, installed and used as follows:

(A) Under the supervision of a qualified person; and

(B) As part of a complete personal fall restraint or positioning device system which maintains a safety factor of at least two.

(6) Horizontal lifelines must be designed, installed, and used, under the supervision of a qualified person, as part of a complete personal fall arrest system, which maintains a safety factor of at least two.

(7) Fall arrest and fall restraint systems.

(a) Fall arrest systems must be rigged so that an employee can neither free fall more than 6 feet, nor contact any lower level.

(b) Fall arrest systems, when stopping a fall, must limit maximum arresting force on an employee to 1,800 pounds

(c) Fall arrest systems must bring an employee to a complete stop and limit maximum deceleration distance an employee travels to 3.5 feet.

(d) Fall restraint systems must be rigged to prevent the user from falling any distance.

(e) Positioning device systems must be rigged such that an employee cannot free fall more than 2 feet.

(8) Personal fall protection systems must be inspected by a competent person prior to each use for wear, damage and other deterioration, and defective components must be removed from service.

(9) When employees use personal fall arrest systems, the employer must provide for prompt rescue of employees in the event of a fall or ensure that employees are able to rescue themselves.

Stat. Auth.: ORS 654.025(2) and 656.726(4).
Stats. Implemented: ORS 654.001 through 654.295.
Hist: OR-OSHA Admin. Order 4-1998, f/8/28/98, ef. 10/1/98.
OR-OSHA Admin. Order 4-2012, f. 9/19/12, ef. 1/1/13.

437-004-1030 Work Clothing.

(1) General requirements. Ensure that employees:

(a) Wear clothing that provides adequate protection for the hazards of the work.

(b) Do not wear loose sleeves or other loose clothing when near enough to be caught in moving parts of machinery.

NOTE: See Divisions 4/O and 4/P for equipment and tool guarding requirements.

(c) Do not wear clothing soaked with flammable liquids or contaminated with other hazardous substances.

NOTE: See Subdivision 4/P 437-004-2230 for requirements for PPE while using chain saws.

(2) High visibility garments.

(a) The employer is responsible to determine, before work begins, if any task or work assigned will expose employees to hazards casued by on-highway type moving vehicles in work zones and street or highway traffic.

(b) Work that exposes employees to these hazards must comply with Division 2/I, 437-002-0134(7) High Visibility Garments.

Stat. Auth.: ORS 654.025(2) and 656.726(4).
Stats. Implemented: ORS 654.001 through 654.295.
Hist: OR-OSHA Admin. Order 4-1998, f/8/28/98, ef. 10/1/98.
OR-OSHA Admin. Order 9-2006, f. 9/22/06, ef. 9/22/06.
OR-OSHA Admin. Order 4-2012, f. 9/19/12, ef. 1/1/13.

437-004-1035 Eye and Face Protection.

NOTES:

See Division 4/Q, 437-004-2310(6) for the protective equipment requirements for welders in agricultural workplaces.

See Division 4/W, 437-004-6000, 170.240(c)(7) for the protective eyewear requirements for pesticide handlers.

(1) General requirements. Employers must:

(a) Provide and require the use of eye or face protection that protects employees from hazards such as flying particles, molten metal, liquid chemicals, acids or caustic materials, gases and vapors, electrical hazards, or potentially harmful light radiation.

(b) If an employee wears prescription lenses while doing work that involves eye or face hazards, either provide protective equipment that incorporates the prescription lenses or provide protective equipment that can be worn over the prescription lenses in a way that does not disturb the proper position of either the prescription lenses or the protective equipment.

(c) Require employees to use eye or face protection with side protection when there is a hazard from flying objects. Detachable side protectors on safety glasses (such as, clip-on or slide-on side shields) are acceptable if they offer adequate protection from the hazard.

(d) Eye and face protection equipment must be clean and in good repair.

(2) Criteria for protective eye and face devices.

(a) Protective eye and face protection devices must comply with any of the following consensus standards:

(A) ANSI Z87.1-2003, “American National Standard Practices for Occupational and Educational Eye and Face Protection;”

(B) ANSI Z89.1-1997, “American National Standard for Industrial Head Protection;”

(C) ANSI Z89.1-1986, “American National Standard for Personnel Protection – Protective Headwear for Industrial Workers – Requirements.”

NOTE: The Oregon OSHA Resource Center has copies of these standards for public review at 350 Winter Street NE, Salem OR.

(b) Protective eye and face protection devices that the employer demonstrates are at least as effective as protective eye and face protection devices that are constructed in accordance with one of the consensus standards will be deemed to be in compliance with the requirements of this section.

(3) Laser protection.

(a) The employer is responsible to determine, before work begins, if any task or work assigned will expose employees to laser light beams.

(b) Work that exposes employees to laser light beams must be furnished laser safety goggles which will protect for the specific wavelength of the laser and be of optical density adequate for the energy involved.

Stat. Auth.: ORS 654.025(2) and 656.726(4).
Stats. Implemented: ORS 654.001 through 654.295.
Hist: OR-OSHA Admin. Order 4-1998, f. 8/28/98, ef. 10/1/98.
OR-OSHA Admin. Order 2-2010, f. 2/25/10, ef. 2/25/10.
OR-OSHA Admin. Order 4-2012, f. 9/19/12, ef. 1/1/13.

437-004-1041 Respiratory Protection.

(1) Permissible practice.

(a) To control occupational diseases caused by breathing contaminated air, the best method is to prevent contamination with engineering controls. To the extent feasible, accepted engineering controls must be used. Examples of engineering controls include enclosing the source of contamination, providing general or local exhaust ventilation to remove the contaminated air from work areas, and substituting less toxic materials. When this approach is not feasible, or while engineering controls are being established, employers must provide appropriate respirators in compliance with this standard.

(b) You must provide a respirator to each employee when it is necessary to protect their health. Respirators must be appropriate for the hazard. You must also establish and maintain an effective respiratory protection program that includes at least the requirements outlined in paragraph (3) of this standard. The program must cover each employee required to use a respirator.

(2) Definitions. The following definitions apply to this standard.

Air-purifying respirator is a respirator with an air-purifying filter, cartridge, or canister that removes specific air contaminants by passing ambient air through the air-purifying element.

Assigned protection factor (APF) means the workplace level of respiratory protection that a respirator or class of respirators is expected to provide to employees when the employer implements a continuing, effective respiratory protection program as specified by this section.

Atmosphere-supplying respirator is a respirator that supplies the user with breathing air from a source independent of the ambient atmosphere, and includes supplied-air respirators (SARs) and self-contained breathing apparatus (SCBA) units.

Canister or cartridge is a container with a filter, sorbent, or catalyst, or combination of these items, that removes specific contaminants from the air passed through the container.

Competent person is a person who, because of training and experience, can identify existing and predictable hazards in equipment, material, conditions or practices and who has the knowledge and authority to take corrective steps.

Demand respirator is an atmosphere-supplying respirator that admits breathing air to the face piece only when inhalation creates a negative pressure inside the face piece.

Elastomer (elastomeric) is an elastic substance like rubber or neoprene.

Emergency situation is any event such as, but not limited to, equipment failure, rupture of containers, or failure of control equipment that may or does result in an uncontrolled significant release of an airborne contaminant.

Employee exposure is exposure to a concentration of an airborne contaminant that would occur if the employee were not using respiratory protection.

End-of-service-life indicator (ESLI) is a device, on the cartridge, that warns respirator users when their respirator is near the end of its ability to protect them. For example, an indicator on the cartridge will change to warn the user that the cartridge sorbent material is nearing saturation and is no longer effective.

Engineering control measures are methods to eliminate or control employee exposure to the hazard; e.g., substitution of a less toxic material, general or local ventilation and enclosing the operation.

Escape-only respirator is a respirator only for use during emergency exit.

Filter or air purifying element is a respirator component (e.g., canister or cartridge) that removes solid or liquid aerosols from the inspired air.

Filtering face piece (dust mask) is a tight fitting negative pressure particulate respirator with a filter as an integral part of the face piece or with the entire face piece made of the filtering medium.

Fit factor is a quantitative estimate of the fit of a particular respirator to a specific person, and typically estimates the ratio of the concentration of a substance in ambient air to its concentration inside the respirator when worn. Instrumentation is used with ambient air as the “test agent” to quantify the respirator fit. See appendix A.

Fit test is the use of procedures in Appendix A to qualitatively or quantitatively evaluate the fit of a respirator on a person. (See also Qualitative fit test QLFT and Quantitative fit test QNFT.)

Helmet is a rigid respirator covering that also provides head protection against impact and penetration.

High efficiency particulate air (HEPA) filter is a filter that is at least 99.97 percent efficient in removing monodisperse particles of 0.3 micrometers in diameter. The equivalent NIOSH 42 CFR 84 particulate filters are the N100, R100, and P100 filters.

Hood is a respirator covering that completely covers the head and neck and may also cover portions of the shoulders and torso.

Immediately dangerous to life or health (IDLH) is an atmosphere that poses an immediate threat to life, would cause irreversible adverse health effects, or would impair an individual's ability to escape from a dangerous atmosphere.

Interior structural firefighting is the physical activity of fire suppression, rescue or both, inside of buildings or enclosed structures which are involved in a fire situation beyond the incipient stage.

Loose-fitting face piece is a respiratory covering that forms a partial seal with the face, e.g., hood.

Maximum use concentration (MUC) means the maximum atmospheric concentration of a hazardous substance from which an employee can be expected to be protected when wearing a respirator, and is determined by the assigned protection factor of the respirator or class of respirators and the exposure limit of the hazardous substance. The MUC can be determined mathematically by multiplying the assigned protection factor specified for a respirator by the required OSHA permissible exposure limit, short-term exposure limit, or ceiling limit. When no OSHA exposure limit is available for a hazardous substance, an employer must determine an MUC on the basis of relevant available information and informed professional judgment.

Negative pressure respirator (tight fitting) is a respirator in which the air pressure inside the face piece is negative during inhalation with respect to the ambient air pressure outside the respirator.

Oxygen deficient atmosphere is an atmosphere with an oxygen content less than 19.5 percent by volume.

Physician or other licensed health care professional (PLHCP) is a person whose legally permitted scope of practice (i.e., license, registration, or certification) allows them to independently provide, or be delegated to provide, some or all of the health care services required by this standard.

Positive pressure respirator is a respirator in which the pressure inside the respiratory covering is higher than the air pressure outside the respirator.

Powered air-purifying respirator (PAPR) is an air-purifying respirator that uses a blower to force the ambient air through air-purifying elements to the inlet covering.

Pressure demand respirator is a positive pressure atmosphere-supplying respirator that admits breathing air to the face piece when inhalation reduces the positive pressure inside the face piece.

Qualitative fit test (QLFT) is a pass/fail fit test to assess the adequacy of respirator fit that relies on the individual's response to the test agent. See Appendix A.

Quantitative fit test (QNFT) is an assessment of the adequacy of respirator fit by numerically measuring the amount of leakage into the respirator. See Appendix A.

Respirator covering is that part of a respirator that forms the protective barrier between the user's respiratory tract and an air-purifying device or breathing air source, or both. It may be a face piece, helmet, hood, suit, or a mouthpiece respirator with nose clamp.

Self-contained breathing apparatus (SCBA) is an atmosphere-supplying respirator for which user carries the breathing air source.

Service life is the period of time that a respirator, filter or sorbent, or other respiratory equipment adequately protects the wearer.

Supplied-air respirator (SAR) or airline respirator is an atmosphere-supplying respirator for which the source of breathing air is not carried by the user.

Tight-fitting face piece is a respirator covering that forms a complete seal with the face, e.g., half mask or full-face piece.

User seal check is an action by the respirator user to determine if the respirator is properly seated to the face. See appendix B-1.

(3) Respiratory protection program.

(a) When respirators are necessary to protect the health of workers or when you require workers to wear them, you must have an effective, written respiratory protection program, managed by a knowledgeable person, with procedures specific to your work site. Keep the program updated to reflect changes in conditions that require the use of respirators. You must include at least these points, as applicable:

(A) Procedures for selecting respirators for use in the workplace;

(B) Procedures for the medical evaluations of employees required to use respirators;

(C) Fit testing procedures for tight-fitting respirators;

(D) Procedures for proper use of respirators in routine and reasonably foreseeable emergency situations;

(E) Procedures and schedules for cleaning, disinfecting, storing, inspecting, repairing, discarding, and otherwise maintaining respirators;

(F) Procedures to ensure adequate air quality, quantity, and flow of breathing air for atmosphere-supplying respirators;

(G) Procedures for training employees in the respiratory hazards to which they are potentially exposed during routine and emergency situations;

(H) Procedures for training employees in the proper use of respirators, including putting on and removing them, any limitations on their use, and their maintenance; and

(I) Procedures for regularly evaluating the effectiveness of the program.

(b) The employer must provide respirators, and all other program requirements including training, and medical evaluations at no cost to the employee.

(c) Where respirator use is voluntary:

(A) You may provide respirators to employees who request them or they may use their own respirators. If you allow this voluntary use;

(i) You must determine that it will not create a hazard to the user.

(ii) You must provide the voluntary user with the information in Appendix D, "Information for Employees Using Respirators When Not Required Under the Standard", and;

(B) You must have a limited written respiratory program for voluntary users. It must include those parts of the standard program necessary to ensure that:

(i) The user is medically able to use the respirator without adverse health effects. Users of tight-fitting respirators other than dust masks must have a medical evaluation.

(ii) The user will properly clean, store and maintain the respirator.

(4) Selection of respirators. Identify and evaluate the respiratory hazard(s) including a reasonable estimate of employee exposures and an identification of the contaminant's chemical state and physical form. You must treat atmospheres with the potential for IDLH conditions as an IDLH hazard and provide appropriate respiratory protection.

(a) General requirements.

(A) You must evaluate respiratory hazards, conditions in the workplace and user factors, then select and provide the appropriate respirators.

(B) All respirators must have NIOSH certification and all use must conform to that certification.

(C) Respirators must correctly fit and be acceptable to the user.

(b) Respirators for IDLH atmospheres.

(A) Provide the following respirators for employee use in IDLH atmospheres:

(i) A full face piece pressure demand SCBA certified by NIOSH for a minimum service life of 30 minutes, or

(ii) A combination full-face piece pressure demand supplied-air respirator (SAR) with auxiliary self-contained air supply.

(B) Respirators only for escape from IDLH atmospheres must have NIOSH certification for escape from the atmosphere of use.

(C) Treat all oxygen-deficient atmospheres as IDLH.

EXCEPTION to paragraph (4)(b)(C): If you can demonstrate that under all foreseeable conditions, the oxygen concentration will stay within the ranges in Table A for the appropriate altitudes set out in the table, then your selection of atmosphere-supplying respirators is not limited to the types listed in (4)(b)(A).

Table A

Altitude (ft.)	Oxygen deficient Atmospheres (% 0_2) for which the employer may rely on atmosphere-supplying respirators
Less than 3,001	16.0-19.5
3,001-4,000	16.4-19.5
4,001-5,000	17.1-19.5
5,001-6,000	17.8-19.5
6,001-7,000	18.5-19.5
7,001-8,000[1]	19.3-19.5

[1] This exception does not apply to altitudes above 8,000 feet. Oxygen-enriched breathing air must be supplied above 14,000 feet.

(c) Respirators for atmospheres that are not IDLH.

(A) Provide respirators adequate to protect the health of workers and ensure compliance with all other OR-OSHA requirements, under routine and reasonably foreseeable emergency situations.

(i) Assigned Protection Factors (APFs). Employers must use the assigned protection factors listed in Table B to select a respirator that meets or exceeds the required level of employee protection. When using a combination respirator (e.g., airline respirators with an air-purifying filter), employers must ensure that the assigned protection factor is appropriate to the mode of operation in which the respirator is being used.

Table B. -- Assigned Protection Factors[5]

Type of respirator[1, 2]	Quarter mask	Half mask	Full facepiece	Helmet/ hood	Loose-fitting facepiece
1. Air-Purifying Respirator	5	[3]10	50	……..	…….
2. Powered Air-Purifying Respirator (PAPR)	……..	50	1,000	[4]25/1,000	25
3. Supplied-Air Respirator (SAR) or Airline Respirator					
• Demand mode	……..	10	50	……..	……..
• Continuous flow mode	……..	50	1,000	[4]25/1,000	25
• Pressure-demand or other positive-pressure mode	…….	50	1,000	……..	……..
4. Self-Contained Breathing Apparatus (SCBA)					
• Demand mode	……..	10	50	50	……..
• Pressure-demand or other positive-pressure mode (e.g., open/closed circuit)	……..	……..	10,000	10,000	……..

Notes:

1 Employers may select respirators assigned for use in higher workplace concentrations of a hazardous substance for use at lower concentrations of that substance, or when required respirator use is independent of concentration.

2 The assigned protection factors in Table B are only effective when the employer implements a continuing, effective respirator program as required by this section (Division 4/I, 437-004-1041), including training, fit testing, maintenance, and use requirements.

3 This APF category includes filtering facepieces, and half masks with elastomeric facepieces.

4 The employer must have evidence provided by the respirator manufacturer that testing of these respirators demonstrates performance at a level of protection of 1,000 or greater to receive an APF of 1,000. This level of performance can best be demonstrated by performing a WPF or SWPF study or equivalent testing. Absent such testing, all other PAPRs and SARs with helmets/hoods are to be treated as loose-fitting facepiece respirators, and receive an APF of 25.

5 These APFs do not apply to respirators used solely for escape. For escape respirators used in association with specific substances covered by Division 4/Z, employers must refer to the appropriate substance-specific standards in that subpart. Escape respirators for other IDLH atmospheres are specified by Division 4/I, 437-004-1041(4)(b)(B).

(ii) Maximum Use Concentration (MUC).

(I) The employer must select a respirator for employee use that maintains the employee's exposure to the hazardous substance, when measured outside the respirator, at or below the MUC.

(II) Employers must not apply MUCs to conditions that are immediately dangerous to life or health (IDLH); instead, they must use respirators listed for IDLH conditions in paragraph (4)(b) of this standard.

(III) When the calculated MUC exceeds the IDLH level for a hazardous substance, or the performance limits of the cartridge or canister, then employers must set the maximum MUC at that lower limit.

(B) The respirator must be appropriate for the chemical state and physical form of the contaminant.

(C) For protection against gases and vapors, provide:

(i) An atmosphere-supplying respirator, or

(ii) An air-purifying respirator, if:

(I) It has and end-of-service-life indicator (ESLI) certified by NIOSH for the contaminant; or

(II) If there is no ESLI appropriate for your conditions, implement a change schedule for canisters and cartridges that is based on objective information or data that will ensure that canisters and cartridges are changed before the end of their service life. Describe in the respirator program the information and data relied on and the basis for the canister and cartridge change schedule and the basis for reliance on the data.

(**NOTE:** The Worker Protection Standard contains criteria for specific change out schedules for respirator canisters and cartridges. See Division 4/W, 170.240.)

(D) For protection against particulates, provide:

(i) An atmosphere-supplying respirator; or

(ii) An air-purifying respirator with a filter certified by NIOSH under 30 CFR part 11 as a high efficiency particulate air (HEPA) filter, or an air-purifying respirator with a filter certified for particulates by NIOSH under 42 CFR part 84; or

(iii) For contaminants consisting primarily of particles with mass median aerodynamic diameters (MMAD) of at least 2 micrometers, an air-purifying respirator with any filter certified for particulates by NIOSH.

(5) Medical evaluation. Using a respirator may place a physiological burden on employees that depends on the type of respirator, the job and workplace conditions in which the respirator is used, and the medical status of the employee.

(a) General. You must provide medical evaluations to determine each worker's ability to use a respirator without causing adverse health effects. Do this before the worker's fit test and before they perform any work requiring respirator use. The employer may discontinue an employee's medical evaluations when the employee no longer uses a respirator.

(b) Medical evaluation procedures. The employer must identify a physician or other licensed health care professional (PLHCP) to perform medical evaluations using a medical questionnaire or an initial examination that obtains the same information as the medical questionnaire. The medical evaluation must obtain the information requested by the questionnaire in Appendix C, Part A, Sections 1 and 2, of this standard.

NOTE: If the employee refuses the examination, they may not be permitted to work in jobs that require a tight-fitting respirator.

(c) Follow-up medical examination.

(A) The employer must ensure that a follow-up medical examination is provided for an employee if, in the opinion of the PLHCP, this is necessary.

NOTE: The PLHCP may require a follow-up examination for an employee who gives a positive response to any question among questions 1 through 9, or 10 through 15 in Appendix C, Part A, Section 2; or whose initial medical examination demonstrates the need for a follow-up medical examination.

(B) The follow-up medical examination must include any medical tests, consultations, or diagnotic procedures that the PLHCP deems necessary to make a final determination.

(d) Administration of the medical questionnaire and examinations.

(A) You must allow the employee to complete the questionnaire in a way that protects the confidentiality of the information. Employers are not allowed to see the answers or to review the completed form. You must allow employees to complete the form during normal working hours or at a time and place convenient to them. If employees need help, allow them to ask your PLHCP or anybody other than their employer or representatives of their employer.

(B) The employer must provide the employee with an opportunity to discuss the questionnaire and examination results with the PLHCP.

(e) Supplemental information for the PLHCP.

(A) You must give the PLHCP the required supplemental information before they make any recommendation about a worker's ability to use a respirator. Use Appendix C, Part B, Section 2 of this standard, or an equivalent form to provide this information.

(i) The type and weight of the respirator the employee will use;

(ii) How long and how often the employee will use the respirator (including use for rescue and escape);

(iii) The expected physical work effort while using the respirator;

(iv) Additional protective clothing and equipment to be worn; and

(v) Temperature and humidity extremes that may exist during use.

(B) Supplemental information you provide for an employee's medical evaluation does not have to be provided again for later evaluations unless the information or the PLHCP changes.

Note to Paragraph (5)(e): When the employer replaces a PLHCP, the employer must ensure that the new PLHCP has this information, either by providing the documents directly to the new PLHCP or by having the documents transferred from the former PLHCP to the new PLHCP. However, OR-OSHA does not expect employers to have employees medically reevaluated solely because there is a new PLHCP.

(f) Medical determination. In determining the employee's ability to use a respirator, the employer must:

(A) Obtain a written recommendation about the employee's ability to use the respirator from the PLHCP. The recommendation must provide only the following information:

(i) Any limitations on respirator use relating to the medical condition of the employee, or relating to the workplace conditions, including whether or not the employee is medically able to use the respirator;

(ii) The need, if any, for follow-up medical evaluations; and

(iii) A statement that the PLHCP gave a copy of the recommendation to the worker.

(B) If the respirator is a negative pressure respirator and the PLHCP finds that using it would increase the employee's health risk, the employer must provide a PAPR until a subsequent evaluation clears the employee for another type.

(g) Additional medical evaluations. At a minimum, the employer must provide additional medical evaluations that comply with this standard if:

(A) An employee reports medical signs or symptoms related to ability to use a respirator;

(B) A PLHCP, supervisor, or the knowledgeable person who manages the respiratory protection program informs the employer that an employee needs a reevaluation; or

(C) Information from the respiratory protection program, including observations made during fit testing and program evaluation, indicates a need for employee reevaluation; or

(D) A change occurs in work conditions (such as physical work effort, protective clothing, and temperatures) that may result in a substantial increase in the physiological burden to the employee.

(6) Fit testing. You must:

(a) Ensure that employees using a tight-fitting face piece respirator pass an appropriate qualitative fit test (QLFT) or quantitative fit test (QNFT), using the same make, model, style and size respirator that they will use in the workplace.

(b) Ensure that each worker using a tight-fitting face piece respirator is fit tested, before initial respirator use; whenever they change to another type, style, model, or make of respirator, and at least annually thereafter.

(c) Do a new fit test on a worker when you observe or the worker, a supervisor, the program administrator, or a PLCHP report any change in the worker's physical condition that could affect the respirator fit. Such conditions include, but are not limited to, facial scarring, dental changes, cosmetic surgery, or an obvious change in body weight.

(d) Give employees a reasonable opportunity to select a different respirator face piece and redo the fit test if, after passing a QLFT or QNFT, the employee notifies the employer, supervisor, or PLHCP that the fit of the respirator is unacceptable.

(e) Ensure that all fit tests comply with the accepted QLFT or QNFT protocols in Appendix A of this standard.

(f) Ensure that qualitative fit tests (QLFT) are used only to fit test negative pressure air-purifying respirators that must achieve an assigned protective factor of 50 or less.

(g) Ensure that quantitative fit tests (QNFT), using an accepted QNFT protocol, are only passed by achieving a fit factor of 100 or more for a tight fitting half face piece respirator, and a fit factor of 500 or more for a tight fitting full face piece respirator.

(h) Ensure that fit testing of tight-fitting atmosphere-supplying respirators and tight-fitting powered air-purifying respirators is only accomplished by performing quantitative or qualitative fit testing in the negative pressure mode, regardless of the mode of operation (negative or positive pressure) that is used for respiratory protection.

(A) Do qualitative fit testing of these respirators by temporarily converting the respirator user's actual face piece into a negative pressure respirator with appropriate filters, or by using an identical negative pressure air-purifying respirator face piece with the same sealing surfaces as a surrogate for the atmosphere-supplying or powered air-purifying respirator face piece.

(B) Do quantitative fit testing of these respirators by modifying the face piece to allow sampling inside the face piece in the breathing zone of the user, midway between the nose and mouth. Do this by installing a permanent sampling probe onto a surrogate face piece, or by using a sampling adapter designed to temporarily provide a way to sample air from inside the face piece.

(C) Before returning a face piece to normal use, completely remove any modifications done for fit testing, and restore the face piece to NIOSH-approved configuration.

(7) Use of respirators.

(a) Face piece seal protection.

(A) You must not permit workers to wear tight-fitting face pieces if they have:

(i) Facial hair that comes between the face-to-face piece sealing surface or that interferes with the respirator's valve function; or

(ii) Any other condition that interferes with the face-to-face piece seal or valve function.

(B) If an employee wears glasses or goggles or other personal protective equipment, the employer must ensure that it does not interfere with the seal of the face piece to the face of the user.

(C) Employers must ensure that workers who wear respirators perform a user seal check before every use, using the procedures in Appendix B-1 or, if equally effective, the recommendations of the respirator manufacturer.

(b) Continuing respirator effectiveness.

(A) You must reevaluate the effectiveness of a respirator when there is a change in work area conditions or degree of employee exposure or stress that may affect respirator effectiveness.

(B) You must ensure that employees leave the area where respirators are required:

(i) To wash their faces and respirator face pieces as necessary to prevent eye or skin irritation associated with respirator use; or

(ii) If they detect vapor or gas breakthrough, changes in breathing resistance, or leakage of the face piece; or

(iii) To replace the respirator or the filter, cartridge, or canister elements.

(C) If the employee detects vapor or gas breakthrough, changes in breathing resistance, or leakage of the face piece, the employer or a competent person must replace or repair the respirator before allowing the employee to return to the work area.

(c) Procedures for IDLH atmospheres. For all IDLH atmospheres, the employer must ensure that:

(A) One employee or, when needed, more than one employee is stationed outside the IDLH atmosphere;

(B) Visual, voice, or line communication is continuous between the employee(s) in the IDLH atmosphere and the employee(s) outside the IDLH atmosphere;

(C) The employee(s) outside the IDLH atmosphere have the training and equipment to provide effective emergency rescue;

(D) The employer or designee is notified before the employee(s) outside the IDLH atmosphere enter the IDLH atmosphere to provide emergency rescue;

(E) The employer or designee authorized to do so by the employer, once notified, provides necessary assistance appropriate to the situation;

(F) Employee(s) outside the IDLH atmospheres have:

(i) Pressure demand or other positive pressure SCBAs, or a pressure demand or other positive pressure supplied-air respirator with auxiliary SCBA; and either

(ii) Appropriate retrieval equipment for removing the employee(s) who enter(s) these hazardous atmospheres where retrieval equipment would contribute to the rescue of the employee(s) and would not increase the overall risk resulting from entry; or

(iii) Equivalent means for rescue when there is no requirement for retrieval equipment under paragraph (7)(c)(F)(ii).

(d) Procedures for interior structural firefighting. If you require your workers to fight interior structural fires, paragraph (7)(c) applies. You must also do the following:

(A) At least two employees enter the IDLH atmosphere and remain in visual or voice contact with one another at all times; and

(B) At least two employees are located outside the IDLH atmosphere; and

(C) All employees engaged in interior structural firefighting use SCBA's.

Note 1 to paragraph (7)(d): One of the two individuals located outside the IDLH atmosphere may be assigned to an additional role, such as incident commander in charge of the emergency or safety officer, so long as this individual is able to perform assistance or rescue activities with- out jeopardizing the safety of health of any firefighter working at the incident.

Note 2 to paragraph (7)(d): Nothing in this section is meant to preclude firefighters from performing emergency rescue activities before an entire team has assembled.

(8) Maintenance and care of respirators.

(a) Cleaning and disinfecting. You must provide each respirator user with a respirator that is clean, sanitary, and in good working order. You also must ensure that respirators are cleaned and disinfected using the procedures in Appendix B-2, or equally effective procedures recommended by the respirator manufacturer, at the following intervals:

(A) Clean and disinfect respirators used exclusively by one worker as often as necessary to keep them sanitary;

(B) Clean and disinfect respirators after each use, or before being worn by different individuals, if used by more than one worker;

(C) Clean and disinfect emergency use respirators after each use; and

(D) Clean and disinfect fit test and training respirators after each use.

(b) Storage. Ensure that respirators are stored as follows:

(A) Store all respirators to protect them from damage, contamination, dust, sunlight, extreme temperatures, excessive moisture, damaging chemicals, and to prevent deformation of the face piece and exhalation valve.

(B) In addition to the requirements of paragraph (8)(b)(A), keep emergency respirators:

(i) Accessible to the work area;

(ii) In compartments or in covers clearly marked as containing emergency respirators; and

(iii) In accordance with any applicable manufacturer instructions.

(c) Inspections.

(A) The employer must require respirator inspections as follows:

(i) Inspect all routine use respirators before each use and during cleaning;

(ii) Inspect emergency use respirators at least monthly and according to the manufacturer's recommendations. Check for proper function before and after each use; and

(iii) Inspect escape respirators before taking them into the workplace for use.

(B) The employer must ensure that respirator inspections include the following:

(i) A check of respirator function, tightness of connections, and the condition of the various parts including, but not limited to, the face piece, head straps, valves, connecting tube, and cartridges, canisters or filters; and

(ii) A check of elastomeric parts for pliability and signs of deterioration.

(C) In addition to the requirements of paragraphs (8)(c)(A) and (B), inspect self-contained breathing apparatus monthly. Keep air and oxygen fully charged and recharge them when the pressure falls to 90 percent of the manufacturer's recommended pressure level. Be certain the regulator and warning devices work properly.

(D) For emergency use respirators, the employer must:

(i) Certify the respirator by documenting the date of inspection, the name (or signature) of the inspector, the findings, required remedial action, and a serial number or other means of identifying the respirator; and

(ii) Provide this information on a tag or label attached to the respirator storage compartment, or keep it with the respirator, or include it in paper or electronic inspection reports. Keep this information until the next report replaces it.

(d) Repairs. Do not use respirators that fail an inspection or are otherwise defective. Either discard them or repair them according to these procedures:

(A) Only people with appropriate training may repair or adjust respirators. They must use only the manufacturer's NIOSH-approved parts designed for the particular respirator;

(B) Repairs must conform to the manufacturer's recommendations for the type of repair to be performed;

(C) Only the manufacturer or a technician trained by the manufacturer may repair or adjust the reducing and admission valves, regulators and alarms.

(9) Breathing air quality and use.

(a) The employer must ensure or have their supplier certify that compressed air, compressed oxygen, liquid air, and liquid oxygen used for respiration meets the following specifications:

(A) Compressed and liquid oxygen must meet the United States Pharmacopoeia requirements for medical or breathing oxygen; and

(B) Compressed breathing air must meet at least the requirements for Grade D breathing air described in ANSI/Compressed Gas Association Commodity Specification for Air, G-7.1-1989, to include:

(i) Oxygen content (v/v) between 19.5 and 23.5 percent;

(ii) Hydrocarbon (condensed) content of no more than 5 milligrams per cubic meter of air;

(iii) Carbon monoxide (CO) content of no more than 10 ppm;

(iv) Carbon dioxide content of no more than 1,000 ppm; and

(v) No noticeable odor.

NOTE: Do not fill your own air vessels unless they and the contents meet all the requirements of this standard

(b) Do not use compressed oxygen in atmosphere-supplied respirators that previously held compressed air.

(c) The employer must ensure that oxygen concentrations more than 23.5 percent are used only in equipment designed for oxygen service or distribution.

(d) The employer must ensure that cylinders to supply breathing air to respirators meet the following requirements:

(A) Cylinders are tested and maintained as prescribed in the Shipping Container Specification Regulations of the Department of Transportation (49 CFR part 180);

(B) Cylinders of purchased breathing air have a certificate of analysis from the supplier that the breathing air meets the requirements for Grade D breathing air; and

(C) The moisture content in the cylinder does not exceed a dew point of –50 degrees F. (-45.6 degrees C.) at 1 atmosphere pressure.

(e) The employer must ensure that compressors supplying breathing air to respirators are constructed and situated to:

(A) Prevent entry of contaminated air into the air-supply system;

(B) Minimize moisture content so that the dew point at 1 atmosphere pressure is 10 degrees F. (5.56 degrees C.) below the ambient temperature;

(C) Have suitable in-line air-purifying sorbent beds and filters to further ensure breathing air quality. Maintain and replace sorbent beds and filters according to the manufacturer's instructions.

(D) Have a tag at the compressor showing the most recent change date and the signature of the authorized person who did the change.

(f) For compressors that are not oil-lubricated, ensure that carbon monoxide levels in the breathing air do not exceed 10 ppm.

(g) For oil-lubricated compressors, use only a high-temperature or carbon monoxide alarm, or both, to monitor carbon monoxide levels. If you use only high-temperature alarms, monitor the air supply often enough to prevent carbon monoxide in the breathing air from exceeding 10 ppm.

(h) The employer must ensure that breathing air couplings are incompatible with outlets for nonrespirable worksite air or other gas systems. Do not allow any asphyxiating substance to get into breathing airlines.

(i) Use only the respirator manufacturer's NIOSH approved breathing gas containers marked and maintained in accordance with the Quality Assurance provisions of the NIOSH approval for the SCBA, as issued in accordance with the NIOSH respirator certification standard at 42 CFR part 84.

(10) Identification of filters, cartridges, and canisters. The employer must ensure that all filters, cartridges and canisters have labels and color codes that comply with the NIOSH standards and that the label remains in place and legible.

(11) Training and information.

(a) The employer must ensure that each employee can demonstrate knowledge of at least the following:

(A) Why the respirator is necessary and how improper fit, use, or maintenance can compromise the protective effect of the respirator;

(B) What the limitations and capabilities of the respirator are;

(C) How to use the respirator effectively in emergency situations, including situations in which the respirator malfunctions;

(D) How to inspect, put on and remove, use, and check the seals of the respirator;

(E) What the procedures are for maintenance and storage of the respirator;

(F) How to recognize medical signs and symptoms that may limit or prevent the effective use of respirators; and

(G) The general requirements of this rule.

(b) Training must be in a language or form that workers understand.

(c) Training must be complete before workers use respirators.

(d) Retrain respirator users annually and when these situations happen:

(A) Changes in the work or the type of respirator make previous training obsolete;

(B) Inadequacies in the employee's knowledge or use of the respirator indicate that they no longer have the basic understanding or skill; or

(C) Any other situation arises in which retraining appears necessary to ensure safe respirator use.

(e) An employer who can demonstrate that a new employee has training within the last 12 months that addresses the elements in paragraph (11)(a)(A) through (G) does not have to repeat that training if, the employee can demonstrate knowledge of those element(s). Previous training not repeated initially by the employer must be provided no later than 12 months from the date of the previous training.

(f) Provide every voluntary respirator user with the basic advisory information in Appendix D. Any written or oral format that the employee understands is acceptable.

(12) Program evaluation.

(a) Evaluate the workplace as necessary to ensure effective implementation of the current written program.

(b) Regularly consult your respirator users to get their views on your program's effectiveness and to identify problems. Correct the problems identified. Things to assess include at least:

(A) Respirator fit (including the ability to use the respirator without interfering with effective workplace performance);

(B) Users have and use the correct respirator and components for their exposure hazards;

(C) Proper respirator use; and

(D) Proper respirator maintenance.

(13) Recordkeeping.

(a) Medical evaluation. Retain and make available all medical evaluations required by this standard according to Division 2/Z, 1910.1020. (Division 4/A, 437-004-0005, Medical Records Access, stipulates that Division 2/Z, 1910.1020 applies to agricultural employers.)

(b) Fit testing.

(A) You must keep a record of qualitative and quantitative fit tests for each user including:

(i) The name or identification of the employee;

(ii) Type of fit test;

(iii) Specific make, model, style, and size of respirator tested;

(iv) Date of test; and

(v) The pass/fail results for QLFTs or the fit factor and strip chart recording or other recording of the test results for QNFTs.

(B) Keep fit test records until records of a new test replace them.

(c) You must keep a written copy of your current respirator program.

(d) On request, you must make written records required by this standard, available to the Oregon OSHA Administrator or their designee for examination or copying.

(14) Appendices. Compliance with Appendix A, Appendix B-1, Appendix B-2, Appendix C, and Appendix D of this rule is mandatory.

(15) Effective Date. OAR 437-004-1041, Respiratory Protection, is effective March 1, 2007.

Stat. Auth.: ORS 654.025(2) and 656.726(4).
Stats. Implemented: ORS 654.001 through 654.295.
Hist: OR-OSHA Admin. Order 3-2006, f. 6/7/06, ef. 3/1/07.
OR-OSHA Admin. Order 10-2006, f. 11/30/06, ef. 11/30/06.
OR-OSHA Admin. Order 3-2007, f. 8/13/07, ef. 8/13/07.
OR-OSHA Admin. Order 4-2012, f. 9/19/12, ef. 1/1/13.

Appendix A to OAR 437-004-1041, Respiratory Protection – Fit Testing Procedures (Mandatory)

Part I. Acceptable Fit Test Procedures

A. Fit Testing Procedures – General Requirements. These fit test procedures are mandatory and apply to both Qualitative Fit Tests (QLFT) and Quantitative Fit Tests (QNFT).

(1) Provide enough respirators so the employee can choose an acceptable model that fits correctly. Be sure they understand that they must select a respirator that gives the best fit.

(2) Before the employee selects their respirator you must show them how to put on a respirator, how to position it on their face, how to set the strap tension and how to make sure the fit is acceptable. There must be a mirror for them to use when evaluating the position and fit. This instruction does not replace the required formal training.

(3) They must hold each face piece they choose up to their face to find the one with the best fit.

(4) Once they choose a mask, have them wear it for at least 5 minutes to evaluate the comfort level. Discuss the points in the following paragraph to assure the worker makes a good evaluation. If they are not familiar with using a particular respirator, have them put it on and take it off several times to assure they make the needed adjustments for a good fit.

(5) Assessment of comfort must include a review of the following points with the test subject and allowing the test subject enough time to determine the comfort of the respirator:

(a) Position of the mask on the nose

(b) Room for eye protection

(c) Room to talk

(d) Position of mask on face and cheeks

(6) Use the following criteria to help determine the adequacy of the respirator fit:

(a) Chin properly placed;

(b) Adequate strap tension, not too tight;

(c) Fit across nose bridge;

(d) Respirator of proper size to span distance from nose to chin;

(e) Tendency of respirator to slip;

(f) Self-observation in mirror to evaluate fit and respirator position.

(7) Have the employee do a user seal check according to Appendix B-1. Before they do the check have them seat the mask by moving their head from side to side and up and down slowly while taking a few deep breaths. If the test fails, have them select another mask.

(8) Do not do the test if the employee has any hair (including beard stubble) between the skin and sealing surface. They must alter or remove any clothing or items that interfere with the fit.

(9) If the testing employee shows signs of difficult breathing during the test, send them to a PLHCP to evaluate their ability to use a respirator.

(10) If the employee finds the fit unacceptable, you must allow them to select another respirator and retest.

(11) Exercises. Before beginning the fit test, give the worker a description of the test and advise them of their responsibilities during the test. The description must include the exercises. They must wear the respirator for 5 minutes before the start of the test.

(12) During the test the employee must wear any other safety equipment normally required for their work, if it could interfere with the respirator fit.

(13) Test Exercises.

(a) The worker must do these test exercises for all fit test methods except CNP. There are different exercises for CNP. The worker must do these in the test environment as follows:

(1) Normal breathing. In a normal standing position, without talking, the subject must breathe normally.

(2) Deep breathing. In a normal standing position, the subject must breathe slowly and deeply, taking caution so as not to hyperventilate.

(3) Turning head side to side. Standing in place, the subject must slowly turn their head from side to side between the extreme positions on each side. The head must be held at each extreme momentarily so the subject can inhale at each side.

(4) Moving head up and down. Standing in place, the subject must slowly move their head up and down. Instruct the subject to inhale in the up position (i.e., when looking toward the ceiling).

(5) Talking. The subject must talk out loud slowly and loud enough to be heard clearly by the test conductor. The subject can read from a prepared text such as the Rainbow Passage, count backward from 100, or recite a memorized poem or song.

Rainbow Passage

When the sunlight strikes raindrops in the air, they act like a prism and form a rainbow. The rainbow is a division of white light into many beautiful colors. These take the shape of a long round arch, with its path high above, and its two ends apparently beyond the horizon. There is, according to legend, a boiling pot of gold at one end. People look, but no one ever finds it. When a man looks for something beyond reach, his friends say he is looking for the pot of gold at the end of the rainbow.

(6) Grimace. The test subject must grimace by smiling or frowning. (This applies only to QNFT testing; it is not for QLFT.)

(7) Bending over. The test subject must bend at the waist as if they were to touch their toes. Substitute jogging in place for this exercise in those test environments such as shroud type QNFT or QLFT units that do not permit bending over at the waist.

(8) Normal breathing. Same as exercise (1).

(b) Do each test exercise for 1-minute except for the grimace exercise which is only for 15 seconds. Ask the test subject about the comfort of the respirator upon completion of the procedure. If there are problems, try another respirator. Do not adjust the respirator after the fit test exercises begin. Any adjustment voids the test.

B. Qualitative Fit Test (QLFT) Procedures

(1) General

(a) The employer must ensure that persons administering QLFT are able to prepare test solutions, calibrate equipment and perform tests properly, recognize invalid tests, and ensure that test equipment works properly.

(b) The employer must ensure that QLFT equipment is clean and well maintained so as to operate within its design parameters.

(2) Isoamyl Acetate Procedures

Note: This procedure is not appropriate to use for the fit testing of particulate respirators unless the particulate cartridges can be replaced with organic vapor cartridges for the duration of the test.

(a) Odor Threshold Screening. Odor threshold screening, done without wearing a respirator, is to determine if the individual tested can detect the odor of isoamyl acetate at low levels.

(1) You'll need three 1 liter glass jars with metal lids.

(2) Use odor-free water (e.g., distilled or spring water) at approximately 25 degrees C. (77 degrees F.) for the solutions.

(3) Make the isoamyl acetate (IAA) (also known at isopentyl acetate) stock solution by adding 1 ml of pure IAA to 800 ml of odor-free water in a 1-liter jar, closing the lid and shaking for 30 seconds. Make a new solution at least weekly.

(4) Do the screening test in a room separate from the room used for actual fit testing. Ventilate the two rooms to prevent the odor of IAA from becoming evident in the general room air where testing takes place.

(5) Make the odor test solution in a second jar by placing 0.4 ml of the stock solution into 500 ml of odor-free water using a clean dropper or pipette. Shake the solution for 30 seconds and allow it to stand for 2 to 3 minutes so that the IAA concentration above the liquid may reach equilibrium. Use this solution for only 1-day.

(6) Make a test blank in a third jar by adding 500 cc of odor-free water.

(7) Label the odor test and test blank jar lids (e.g., 1 and 2) for jar identification. Place the labels on the lids so that they can be peeled off periodically and switched to maintain the integrity of the test.

(8) Type the following instruction on a card and place it on the table in front of the two test jars (i.e., 1 and 2): "The purpose of this test is to determine if you can smell banana oil at a low concentration. The two bottles in front of you contain water. One of these bottles also has a small amount of banana oil. Be sure the covers are on tight, then shake each bottle for two seconds. Unscrew the lid of each bottle, one at a time, and sniff at the mouth of the bottle. Indicate to the test conductor which bottle contains banana oil."

(9) Make the mixtures for the IAA odor detection test in an area separate from where you do the test, in order to prevent olfactory fatigue in the subject.

(10) If the test subject cannot correctly identify the jar containing the odor test solution, do not do the IAA qualitative fit test.

(11) If the test subject correctly identifies the jar containing the odor test solution, the test subject may proceed to respirator selection and fit testing.

(b) Isoamyl Acetate Fit Test

(1) The fit test chamber must be a clear 55-gallon drum liner suspended inverted over a 2-foot diameter frame so that the top of the chamber is about 6 inches above the test subject's head. If no drum liner is available, make a similar chamber using plastic sheeting. The inside top center of the chamber must have a small hook attached.

(2) Each respirator for the fitting and fit testing must have organic vapor cartridges or offer protection against organic vapors.

(3) After selecting, donning, and properly adjusting a respirator, the test subject must wear it to the fit testing room. This room must be separate from the room used for odor threshold screening and respirator selection, and must be well-ventilated, as by an exhaust fan or lab hood, to prevent general room contamination.

(4) Tape a copy of the test exercises and any prepared text from which the subject is to read to the inside of the test chamber.

(5) Give the test subject a 6-inch by 5-inch piece of paper towel, or other porous, absorbent, single-ply material, folded in half and wetted with 0.75 ml of pure IAA when they enter the test chamber. Have the test subject hang the wet towel on the hook at the top of the chamber. You may substitute an IAA test swab or ampule for the IAA wetted paper towel if the alternative IAA source will generate an IAA test atmosphere with a concentration equivalent to that generated by the paper towel method.

(6) Allow 2 minutes for the IAA test concentration to stabilize before starting the fit test exercises. This would be an appropriate time to talk with the test subject; to explain the fit test, the importance of their cooperation, and the purpose for the test exercises; or to demonstrate some of the exercises.

(7) If at any time during the test, the subject detects the banana-like odor of IAA, the test is a failure. The subject must quickly exit from the test chamber and leave the test area to avoid olfactory fatigue.

(8) If the test fails, the subject must return to the selection room and remove the respirator. The test subject must repeat the odor sensitivity test, select and put on another respirator, return to the test area and again begin the fit test procedure in (b)(1) through (7) above. The process continues until they find a respirator that fits right. Should the odor sensitivity test fail, the subject must wait at least a few minutes before re-testing. Odor sensitivity will usually return by this time.

(9) If the subject passes the test, demonstrate the efficiency of the test procedure by having the subject break the respirator face seal and take a breath before exiting the chamber.

(10) When the test subject leaves the chamber, they must remove the saturated towel and return it to the person conducting the test, so that there is no significant IAA concentration build-up in the chamber during subsequent tests. Keep the used towels in a self-sealing plastic bag to prevent contamination of the test area.

(3) Saccharin Solution Aerosol Procedure

You must explain the entire screening and testing procedure to the test subject before starting the screening test.

(a) Taste threshold screening. The saccharin taste threshold screening, done without wearing a respirator, is to determine if the individual being tested can detect the taste of saccharin.

(1) During threshold screening as well as during fit testing, subjects must wear an enclosure about the head and shoulders that is approximately 12 inches in diameter by 14 inches tall with at least the front portion clear and that allows free movements of the head when wearing a respirator. An enclosure substantially similar to the 3M hood assembly, parts # FT 14 and # FT 15 combined, is adequate.

(2) The test enclosure must have a 3/4-inch (1.9 cm) hole in front of the test subject's nose and mouth area to accommodate the nebulizer nozzle.

(3) Have the test subject put on the test enclosure. Throughout the threshold screening test, the test subject must breathe through their slightly open mouth with tongue extended. Tell the subject to report when they detect a sweet taste.

(4) Using a DeVilbiss Model 40 Inhalation Medication Nebulizer or equivalent, the test conductor must spray the threshold check solution into the enclosure. Direct the nozzle away from the nose and mouth of the person. Clearly mark this nebulizer to distinguish it from the fit test solution nebulizer.

(5) Make the threshold check solution by dissolving 0.83 gram of sodium saccharin USP in 100 ml of warm water. You can also put 1 ml of the fit test solution (see (b)(5) below) in 100 ml of distilled water.

(6) To produce the aerosol, firmly squeeze the nebulizer bulb so that it collapses completely, then release and allow to fully expand.

(7) Repeat ten squeezes rapidly and then ask the test subject if they can taste the saccharin. The test is over when the test subject reports tasting the sweet taste during the ten squeezes. Note the taste threshold as ten regardless of the number of squeezes actually done.

(8) If the first response is negative, do ten more squeezes rapidly and ask the test subject if they taste the saccharin. If the test subject reports tasting the sweet taste during the second ten squeezes, the screening test is over. The taste threshold is twenty regardless of the number of squeezes actually done.

(9) If the second response is negative, do ten more squeezes rapidly and ask the test subject again if they taste the saccharin. If the test subject reports tasting the sweet taste during the third set of ten squeezes, the screening test is over. The taste threshold is thirty regardless of the number of squeezes actually done.

(10) The test conductor will take note of the number of squeezes required to solicit a taste response.

(11) If the test subject cannot taste saccharin after 30 squeezes they may not perform the saccharin fit test.

Note to paragraph 3.(a): If the test subject eats or drinks something sweet before the screening test, they may be unable to taste the weak saccharin solution.

(12) If the test subject gives a taste response, ask them to take note of the taste for reference in the fit test.

(13) Correct use of the nebulizer uses approximately 1 ml of liquid at a time in the nebulizer body.

(14) Thoroughly rinse the nebulizer in water, shake it dry, and refill it at least each morning and afternoon or at least every 4 hours.

(b) Saccharin solution aerosol fit test procedure.

(1) The test subject may not eat, drink (except plain water), smoke, or chew gum for 15 minutes before the test.

(2) The fit test uses the same enclosure as in 3.(a) above.

(3) The test subject must put on the enclosure while wearing the respirator selected in section I.A.. They must properly adjust the respirator and it must have a particulate filter(s).

(4) Use a second DeVilbiss Model 40 Inhalation Medication Nebulizer or equivalent to spray the fit test solution into the enclosure. Clearly mark this nebulizer to distinguish it from the screening test solution nebulizer.

(5) Make the fit test solution by adding 83 grams of sodium saccharin to 100 ml of warm water.

(6) As before, the test subject must breathe through the slightly open mouth with tongue extended, and report if they taste the sweet taste of saccharin.

(7) Insert the nebulizer into the hole in the front of the enclosure and spray an initial concentration of saccharin fit test solution into the enclosure using the same number of squeezes (either 10, 20 or 30 squeezes) based on the number of squeezes required to elicit a taste response as noted during the screening test. The minimum is 10 squeezes.

(8) After generating the aerosol, tell the test subject to perform the exercises in section I.A.13.

(9) Replenish the aerosol concentration every 30 using one half the original number of squeezes used initially (e.g., 5, 10 or 15).

(10) The test subject must indicate to the test conductor if at any time during the fit test they taste saccharin. If the test subject does not report tasting the saccharin, the test is successful.

(11) If they taste the saccharin, the fit is unsatisfactory and a failure. Try a different respirator and repeat the entire test procedure (taste threshold screening and fit testing).

(12) Since the nebulizer has a tendency to clog during use, the test operator must make periodic checks of the nebulizer to ensure that it is not clogged. If clogging is found at the end of the test session, the test is invalid.

(4) Bitrex™ (Denatonium Benzoate) Solution Aerosol Qualitative Fit Test Procedure

The Bitrex™ (Denatonium benzoate) solution aerosol QLFT procedure uses the published saccharin test procedure because that procedure is widely accepted. Bitrex is a taste aversion agent used in household liquids that children should not drink and is endorsed by the American Medical Association, the National Safety Council, and the American Association of Poison Control Centers. Explain the entire screening and testing procedure to the test subject before the screening test.

(a) Taste Threshold Screening.

The Bitrex taste threshold screening, done without wearing a respirator, is to determine if the person being tested can detect the taste of Bitrex.

(1) During threshold screening as well as during fit testing, subjects must wear an enclosure about the head and shoulders that is approximately 12 inches (30.5 cm) in diameter by 14 inches (35.6 cm) tall. The front portion of the enclosure must be clear from the respirator and allow free movement of the head when a respirator is worn. An enclosure substantially similar to the 3M hood assembly, parts # FT 14 and # FT 15 combined, is adequate.

(2) The test enclosure must have a 3/4-inch (1.9 cm) hole in front of the test subject's nose and mouth area to accommodate the nebulizer nozzle.

(3) The test subject must put on the test enclosure. Throughout the threshold screening test, the test subject must breathe through his or her slightly open mouth with tongue extended. Tell the subject to report when they detect a bitter taste.

(4) Using a DeVilbiss Model 40 Inhalation Medication Nebulizer or equivalent, the spray the Threshold Check Solution into the enclosure. Clearly mark this Nebulizer to distinguish it from the fit test solution nebulizer.

(5) Make the Threshold Check Solution by adding 13.5 milligrams of Bitrex to 100 ml of 5 percent salt (NaCl) solution in distilled water.

(6) To produce the aerosol, firmly squeeze the nebulizer bulb so that the bulb collapses completely, and then release it and allow it to fully expand.

(7) Repeat the initial ten squeezes rapidly and then ask the test subject if they taste the Bitrex. If the test subject tastes the bitter taste during the ten squeezes, the screening test is over. The taste threshold is ten regardless of the number of squeezes actually done.

(8) If the first response is negative, repeat ten more squeezes rapidly and ask the test subject if they taste the Bitrex. If the test subject tastes the bitter taste during the second ten squeezes, the screening test is over. The taste threshold is twenty regardless of the number of squeezes actually done.

(9) If the second response is negative, do ten more squeezes rapidly and ask the test subject if they taste the Bitrex. If the test subject tastes the bitter taste during the third set of ten squeezes, the screening test is over. The taste threshold is as thirty regardless of the number of squeezes actually done.

(10) The test conductor will take note of the number of squeezes required to solicit a taste response.

(11) If the subject does not taste the Bitrex after 30 squeezes (step 10), the test subject cannot taste Bitrex and may not do the Bitrex fit test.

(12) If they taste the Bitrex, ask the test subject to remember the taste for reference in the fit test.

(13) Correct use of the nebulizer is approximately 1 ml of liquid at a time in the nebulizer body.

(14) Thoroughly rinse the nebulizer in water, shake to dry, and refill at least each morning and afternoon or at least every 4 hours.

(b) Bitrex Solution Aerosol Fit Test Procedure.

(1) The test subject may not eat, drink (except plain water), smoke, or chew gum for 15 minutes before the test.

(2) The fit test uses the same enclosure as in 4.(a) above.

(3) The test subject must put on the enclosure while wearing the respirator selected according to section I.A. They must properly adjust the respirator and it must have any type particulate filter(s).

(4) Use a second DeVilbiss Model 40 Inhalation Medication Nebulizer or equivalent to spray the fit test solution into the enclosure. Clearly mark this nebulizer to distinguish it from the screening test solution nebulizer.

(5) Make the fit test solution by adding 337.5 mg of Bitrex to 200 ml of a 5 percent salt (NaCl) solution in warm water.

(6) As before, the test subject must breathe through his or her slightly open mouth with tongue extended, and report if they taste the bitter taste of Bitrex.

(7) Insert the nebulizer into the hole in the front of the enclosure and spray an initial concentration of the fit test solution into the enclosure using the same number of squeezes (either 10, 20 or 30 squeezes) based on the number of squeezes required to elicit a taste response as noted during the screening test.

(8) After generating the aerosol, tell the test subject to do the exercises in section I.A.13.

(9) Replenish the aerosol concentration every 30 seconds using one half the number of squeezes used initially (e.g., 5, 10 or 15).

(10) The test subject must indicate to the test conductor if they taste the Bitrex during the test. If the test subject does not taste the Bitrex, the test passes.

(11) If they taste the Bitrex, the fit is unsatisfactory and the test fails. They must try a different respirator and repeat the entire test procedure (taste threshold screening and fit testing).

(5) Irritant Smoke (Stannic Chloride) Procedure

This qualitative fit test uses a person's response to the irritating chemicals released in the "smoke" produced by a stannic chloride ventilation smoke tube to detect leakage into the respirator.

(a) General Requirements and Precautions

(1) The test respirator must have high efficiency particulate air (HEPA) or P100 series filter(s).

(2) Use only stannic chloride smoke tubes for this procedure.

(3) Do not use any form of test enclosure or hood for the test subject.

(4) The smoke can be irritating to the eyes, lungs, and nasal passages. The test conductor must take precautions to minimize the test subject's exposure to irritant smoke. Sensitivity varies, and certain individuals may respond to a greater degree to irritant smoke. Use only the smallest amount of smoke necessary to get a response when doing the sensitivity screening checks that determine if the test subject can detect irritant.

(5) Do the fit test in an area with adequate ventilation to prevent exposure of the person doing the fit test or the build-up of irritant smoke in the general area.

(b) Sensitivity Screening Check

The person taking the test must demonstrate their ability to detect a weak concentration of the irritant smoke.

(1) The test operator must break both ends of a ventilation smoke tube containing stannic chloride, and attach one end of the smoke tube to a low flow air pump set to deliver 200 milliliters per minute, or an aspirator squeeze bulb. The test operator must cover the other end of the smoke tube with a short piece of tubing to prevent potential injury from the jagged end of the smoke tube.

(2) The test operator must advise the test subject that the smoke can be irritating to the eyes, lungs, and nasal passages and instruct the subject to keep their eyes closed during the test.

(3) Allow the test subject to smell a weak concentration of the irritant smoke before putting the respirator on to become familiar with its irritating properties and to determine if they can detect the irritating properties of the smoke. Carefully direct a small amount of the irritant smoke in the test subject's direction to determine that they can detect it.

(c) Irritant Smoke Fit Test Procedure

(1) The person fit tested must put on the respirator without assistance, and do the required user seal check(s).

(2) Tell the test subject to keep their eyes closed.

(3) The test operator must direct the stream of irritant smoke from the smoke tube toward the face seal area of the test subject, using the low flow pump or the squeeze bulb. The test operator must begin at least 12 inches from the face piece and move the smoke stream around the whole perimeter of the mask. The operator must gradually make two more passes around the perimeter of the mask, moving to within 6 inches of the respirator.

(4) If the test subject has no involuntary response and/or does not detect the irritant smoke, proceed with the test exercises.

(5) The test subject must do the exercises in section I.A.13. while the respirator seal is continually challenged by the smoke, directed around the perimeter of the respirator at a distance of 6 inches.

(6) If the person detects the irritant smoke, the test fails. The person re-testing must repeat the entire sensitivity check and fit test procedure.

(7) Give a second sensitivity screening check to each test subject passing the irritant smoke test without evidence of a response (involuntary cough, irritation), with the smoke from the same smoke tube used during the fit test, with the respirator off, to determine if they still reacts to the smoke. Failure to evoke a response voids the fit test.

(8) If there is a response during this second sensitivity check, then the fit test passes.

C. Quantitative Fit Test (QNFT) Procedures

The following quantitative fit testing procedures are acceptable: Quantitative fit testing using a non-hazardous test aerosol (such as corn oil, polyethylene glycol 400 [PEG 400], di-2-ethyl hexyl sebacate [DEHS], or sodium chloride) generated in a test chamber, and using instrumentation to quantify the fit of the respirator; Quantitative fit testing using ambient aerosol as the test agent and appropriate instrumentation (condensation nuclei counter) to quantify the respirator fit; Quantitative fit testing using controlled negative pressure and appropriate instrumentation to measure the volumetric leak rate of a face piece to quantify the respirator fit.

(1) General

(a) The employer must ensure that persons administering QNFT are able to calibrate equipment and perform tests properly, recognize invalid tests, calculate fit factors properly and ensure that test equipment is in proper working order.

(b) The employer must ensure that QNFT equipment is clean, and maintained and calibrated according to the manufacturer's instructions so as to operate at its design parameters.

(2) Generated Aerosol Quantitative Fit Testing Procedure

(a) Apparatus.

(1) Instrumentation. Use aerosol generation, dilution, and measurement systems using particulates (corn oil, polyethylene glycol 400 [PEG 400], di-2-ethyl hexyl sebacate [DEHS] or sodium chloride) as test aerosols.

(2) Test chamber. The test chamber must be large enough to permit all test subjects to perform freely all required exercises without disturbing the test agent concentration or the measurement apparatus. The test chamber must effectively isolate the test agent from the outside air, yet allow its concentration to be uniform throughout the chamber.

(3) When testing air-purifying respirators, replace the normal filter or cartridge element with a high efficiency particulate air (HEPA) or P100 series filter supplied by the same manufacturer.

(4) The sampling instrument must make a computer record or strip chart record of the test showing the rise and fall of the test agent concentration with each inhale and exhale at fit factors of at least 2,000. Integrators or computers that integrate the amount of test agent penetration leakage into the respirator for each exercise are Ok if they make a record of the readings.

(5) The combination of substitute air-purifying elements, test agent and test agent concentration must not expose the test subject in excess of an established exposure limit for the test agent at any time during the testing process.

(6) The sampling port on the test specimen must not allow leaks around the port (e.g., where the respirator is probed). It must always allow a free airflow into the sampling line, and there must be no interference with the fit or performance of the respirator. The in-mask sampling device (probe) must draw the air sample from the breathing zone of the test subject, midway between the nose and mouth and with the probe extending into the face piece cavity at least 1/4-inch.

(7) The test setup must permit the person administering the test to observe the test subject inside the chamber during the test.

(8) The equipment generating the test atmosphere must keep the concentration of test agent constant to within a 10 percent variation for the duration of the test.

(9) The time lag (interval between an event and the recording of the event on the strip chart or computer or integrator) must be minimal. There must be a clear association between the occurrence of an event and its recording.

(10) The sampling line tubing for the test chamber atmosphere and for the respirator sampling port must be of equal diameter and of the same material. The length of the two lines must be equal.

(11) The exhaust flow from the test chamber must pass through an appropriate filter (i.e., high efficiency particulate filter) before release.

(12) When using sodium chloride aerosol, the relative humidity inside the test chamber must not exceed 50 percent.

(13) Take into account the limitations of instrument when determining the fit factor.

(14) Test respirators must work right. Inspect them regularly for deficiencies such as cracks or missing valves and gaskets.

(b) Procedural Requirements.

(1) When performing the initial user seal check using a positive or negative pressure check, crimp the sampling line closed to avoid air pressure leakage during either of these pressure checks.

(2) The use of an abbreviated screening QLFT test is optional. Such a test may quickly identify poor fitting respirators that passed the positive and/or negative pressure test and reduce the amount of QNFT time. The use of the CNC QNFT instrument in the count mode is another optional method to obtain a quick estimate of fit and eliminate poor fitting respirators before going on to perform a full QNFT.

(3) You must measure a reasonably stable test agent concentration in the test chamber prior to testing. For canopy or shower curtain types of test units, you may determine the test agent's stability after the test subject enters the test environment.

(4) Immediately after the subject enters the test chamber, measure the test agent concentration inside the respirator to ensure that the peak penetration does not exceed 5 percent for a half mask or 1 percent for a full-face piece respirator.

(5) You must have a stable test agent concentration before starting the test.

(6) Do not tighten the respirator restraining straps too much for testing. The wearer must adjust the straps without assistance to give a reasonably comfortable fit typical of normal use. Do not adjust the after the fit test exercises begin.

(7) Stop the test when any single peak penetration exceeds 5 percent for half masks and 1 percent for full-face piece respirators. The test subject must refit and retest.

(8) Calculation of fit factors.

(i) Determine the fit factor for the quantitative fit test by taking the ratio of the average chamber concentration to the concentration measured inside the respirator for each test exercise except the grimace exercise.

(ii) Calculate the average test chamber concentration as the arithmetic average of the concentration measured before and after each test (i.e., 7 exercises) or the arithmetic average of the concentration measured before and after each exercise or the true average measured continuously during the respirator sample.

(iii) Use one of these methods to figure the concentration of the challenge agent inside the respirator:

(A) Average peak penetration method means the method of determining test agent penetration into the respirator using a strip chart recorder, integrator, or computer. The agent penetration is the average of the peak heights on the graph or by computer integration, for each exercise except the grimace exercise. Integrators or computers that calculate the actual test agent penetration into the respirator for each exercise meet the requirements of the average peak penetration method.

(B) Maximum peak penetration method means the method of determining test agent penetration in the respirator as determined by strip chart recordings of the test. The highest peak penetration for a given exercise is representative of average penetration into the respirator for that exercise.

(C) Integration by calculation of the area under the individual peak for each exercise except the grimace exercise. This includes computerized integration.

(D) The calculation of the overall fit factor using individual exercise fit factors involves first converting the exercise fit factors to penetration values, determining the average, and then converting that result back to a fit factor. This equation represents the procedure:

$$\text{Overal Fit Factor} = \frac{\text{Number of exercises}}{1/ff_1 + 1/ff_2 + 1/ff_3 + 1/ff_4 + 1/ff_5 + 1/ff_7 + 1/ff_8}$$

Where ff_1, ff_2, ff_3, etc. are the fit factors for exercises 1, 2, 3, etc.

(9) Do not allow the test subject to wear a half mask or quarter face piece respirator unless they have a minimum fit factor of 100, or a full face piece respirator unless they have a minimum fit factor of 500.

(10) Replace filters used for quantitative fit testing when they cause increased breathing resistance, or when the test agent has altered the integrity of the filter media.

(3) Quantitative fit testing (QNFT) procedure for the ambient aerosol condensation nuclei counter (CNC).

Ambient aerosol condensation nuclei counter (CNC) quantitative fit testing procedure.

The ambient aerosol condensation nuclei counter (CNC) quantitative fit testing (Portacount™) procedure quantitatively fit tests respirators with the use of a probe. The probed respirator is only for use with quantitative fit tests. A probed respirator has a special sampling device, installed on the respirator, that allows the probe to sample the air from inside the mask. A probed respirator is required for each make, style, model, and size that the employer uses and is available from the respirator manufacturer or distributor. The CNC instrument manufacturer, TSI Inc., also provides probe attachments (TSI sampling adapters) that permit fit testing in an employee's own respirator. A minimum fit factor pass level of at least 100 is necessary for a half-mask respirator and a minimum fit factor pass level of at least 500 is required for a full-face piece negative pressure respirator. Explain the entire screening and testing procedure to the test subject before doing the screening test.

(a) Portacount Fit Test Requirements.

(1) Check the respirator to make sure the sampling probe and line are properly attached to the face piece and that the respirator has a particulate filter capable of preventing significant penetration by the ambient particles used for the fit test (e.g., NIOSH 42 CFR 84 series 100, series 99, or series 95 particulate filter) per manufacturer's instruction.

(2) Instruct the test employee to put on the respirator for 5 minutes before the fit test starts. This purges the ambient particles trapped inside the respirator and permits the wearer to make certain the respirator is comfortable. This person must have training on how to wear the respirator properly.

(3) Check the following conditions for the adequacy of the respirator fit: Chin properly placed; Adequate strap tension, not overly tightened; Fit across nose bridge; Respirator of proper size to span distance from nose to chin; Tendency of the respirator to slip; Self-observation in a mirror to evaluate fit and respirator position.

(4) Have the person wearing the respirator do a user seal check. If it leaks, determine the cause. If the leak is from a poorly fitting face piece, try another size of the same model respirator, or another model of respirator.

(5) Follow the manufacturer's instructions for operating the Portacount and proceed with the test.

(6) Instruct the test subject to perform the exercises in section I.A.13.

(7) After the test exercises, question the test subject about the comfort of the respirator. If it has become unacceptable, try another model respirator.

(b) Portacount Test Instrument.

(1) The Portacount will automatically stop and calculate the overall fit factor for the entire set of exercises. The overall fit factor is what counts. The Pass or Fail message will indicate whether or not the test was successful. If the test was a Pass, the fit test is over.

(2) Since the pass or fail criterion of the Portacount is user programmable, the test operator must ensure that the pass or fail criterion meet the requirements for minimum respirator performance in this Appendix.

(3) Keep a record of the test, assuming the fit test was successful. The record must have the test subject's name; overall fit factor; make, model, style, and size of respirator; and date of the test.

(4) Controlled negative pressure (CNP) quantitative fit testing procedure.

The CNP procedure is an alternative to aerosol fit test methods. The CNP fit test method technology is based on exhausting air from a temporarily sealed respirator face piece to generate and then maintain a constant negative pressure inside the face piece. The rate of air exhaust is controlled so that there is a constant negative pressure in the respirator during the fit test. The level of pressure is selected to replicate the mean inhalation pressure that causes leakage into the respirator under normal use conditions. With pressure held constant, airflow out of the respirator is equal to air flow into the respirator. Therefore, measurement of the exhaust stream required to hold the pressure in the temporarily sealed respirator constant yields a direct measure of leakage airflow into the respirator. The CNP fit test method measures leak rates through the face piece as a method for determining the face piece fit for negative pressure respirators. The CNP instrument manufacturer Occupational Health Dynamics of Birmingham, Alabama also provides attachments (sampling manifolds) that replace the filter cartridges to permit fit testing in an employee's own respirator. To perform the test, the test subject closes his or her mouth and holds their breath, after which an air pump removes air from the respirator face piece at a pre-selected constant pressure. The face piece fit is expressed as the leak rate through the face piece, in milliliters per minute. The quality and validity of the CNP fit tests are determined by the degree to which the in-mask pressure tracks the test pressure during the system measurement time of approximately five seconds. Instantaneous feedback in the form of a real-time pressure trace of the in-mask pressure is provided and used to determine test validity and quality. A minimum fit factor pass level of 100 is necessary for a half-mask respirator and a minimum fit factor of at least 500 is required for a full-face piece respirator. Explain the entire screening and testing procedure to the test subject before doing the screening test.

(a) CNP Fit Test Requirements.

(1) The instrument must have a nonadjustable test pressure of 15.0 mm water pressure.

(2) The CNP system defaults selected for test pressure must be set at -15 mm of water (-0.58 inches of water) and the modeled inhalation flow rate must be 53.8 liters per minute for performing fit tests.

(**Note:** CNP systems have built-in capability to conduct fit testing that is specific to unique work rate, mask, and gender situations that might apply in a specific workplace. Use of system default values, which were selected to represent respirator wear with medium cartridge resistance at a low-moderate work rate, will allow inter-test comparison of the respirator fit.)

(3) The individual who conducts the CNP fit testing must have adequate training to lead the test.

(4) Replace the respirator filter or cartridge with the CNP test manifold. Temporarily remove or prop open the inhalation valve downstream from the manifold.

(5) Train the test subject to hold his or her breath for at least 20 seconds.

(6) The test subject must put on the test respirator without any assistance. The respirator must not be adjusted once the fit-test exercises begin. Any adjustment voids the test, and the test subject must repeat the fit-test.

(7) Follow the QNFT procedure according to section I.C.1. with an exception for the CNP test exercises.

(b) CNP Test Exercises.

(1) Normal breathing. In a normal standing position, without talking, the subject must breathe normally for 1-minute. After the normal breathing exercise, the subject needs to hold their head straight ahead and hold their breath for 10 seconds during the test measurement.

(2) Deep breathing. In a normal standing position, the subject must breathe slowly and deeply for 1-minute, being careful not to hyperventilate. After the deep breathing exercise, the subject must hold their head straight ahead and hold their breath for 10 seconds during test measurement.

(3) Turning head side to side. Standing in place, the subject must slowly turn their head from side to side between the extreme positions on each side for 1-minute. The head must be held at each extreme momentarily so the subject can inhale at each side. After the turning head side to side exercise, the subject needs to hold their head full left and hold his or her breath for 10 seconds during test measurement. Next, the subject needs to hold their head full right and hold his or her breath for 10 seconds during test measurement.

(4) Moving head up and down. Standing in place, the subject must slowly move their head up and down for 1-minute. Instruct the subject to inhale in the up position (i.e., when looking toward the ceiling). After the moving head up and down exercise, the subject must hold their head full up and hold his or her breath for 10 seconds during test measurement. Next, the subject must hold their head full down and hold his or her breath for 10 seconds during test measurement.

(5) Talking. The subject must talk out loud slowly and loud enough to be heard clearly by the test conductor. The subject can read from a prepared text like the Rainbow Passage, count backward from 100, or recite a memorized poem or song for 1-minute. After the talking exercise, the subject must hold their head straight ahead and hold their breath for 10 seconds during the test measurement.

(6) Grimace. The test subject must grimace by smiling or frowning for 15 seconds.

(7) Bending Over. The test subject must bend at the waist as if they were to touch their toes for 1-minute. Substitute jogging in place for this exercise in those test environments such as shroud-type QNFT units that prohibit bending at the waist. After the bending over exercise, the subject must hold their head straight ahead and hold their breath for 10 seconds during the test measurement.

(8) Normal Breathing. The test subject must remove and re-don the respirator within a 1-minute period. Then, in a normal standing position, without talking, the subject must breathe normally for 1-minute. After the normal breathing exercise, the subject must hold their head straight ahead and hold their breath for 10 seconds during the test measurement. After the test exercises, question the test about the comfort of the respirator after completion of the test. If it is unacceptable, try another model of respirator.

(c) CNP Test Instrument.

(1) The test instrument must have an effective audio warning device when the test subject fails to hold their breath during the test. Stop the test when the test subject fails to hold their breath. Refit and retest the test subject.

(2) Keep a record of the test, assuming the fit test was successful. The record must have the test subject's name; overall fit factor; make, model, style and size of respirator; and date of the test.

Part II. New Fit Test Procedures – Oregon OSHA will accept any new procedures that OSHA accepts. For more information of submitting new procedures for acceptance or other information about this subject, read the federal rules.

Stat. Auth.: ORS 654.025(2) and 656.726(4).
Stats. Implemented: ORS 654.001 through 654.295.
Hist: OR-OSHA Admin. Order 3-2006, f. 6/7/06, ef. 3/1/07.
OR-OSHA Admin. Order 3-2007, f. 8/13/07, ef. 8/13/07.
OR-OSHA Admin. Order 4-2012, f. 9/19/12, ef. 1/1/13.

Appendix B-1 to OAR 437-004-1041, Respiratory Protection – User Seal Check Procedures (Mandatory)

The user of a tight-fitting respirator must do a seal check every time they put on the respirator. They must use one of the two methods below or the manufacturer's recommended method. (These tests do not substitute for qualitative or quantitative fit tests.)

(I) Face piece Positive and/or Negative Pressure Checks

(A) Positive pressure check. Close off the exhalation valve and exhale gently into the face piece. The face fit is satisfactory if a slight positive pressure can be built up inside the face piece without any evidence of outward leakage of air at the seal. For most respirators this method of leak testing requires the wearer to first remove the exhalation valve cover before closing off the exhalation valve and then carefully replacing it after the test.

(B) Negative pressure check. Close off the inlet opening of the canister or cartridge(s) by covering with the palm of the hand(s) or by replacing the filter seal(s), inhale gently so that the face piece collapses slightly, and hold the breath for ten seconds. The design of the inlet opening of some cartridges cannot be effectively covered with the palm of the hand. The test can be performed by covering the inlet opening of the cartridge with a thin latex or nitrile glove. If the face piece remains in its slightly collapsed condition and there is no sign of inward leakage of air, the tightness of the respirator is satisfactory.

(II) Manufacturer's Recommended User Seal Check Procedures

You may use the respirator manufacturer's recommended procedures for performing a user seal check instead of the positive and/or negative pressure check procedures if you can demonstrate that the manufacturer's procedures are equally effective.

Stat. Auth.: ORS 654.025(2) and 656.726(4).
Stats. Implemented: ORS 654.001 through 654.295.
Hist: OR-OSHA Admin. Order 3-2006, f. 6/7/06, ef. 3/1/07.
OR-OSHA Admin. Order 4-2012, f. 9/19/12, ef. 1/1/13.

Appendix B-2 to OAR 437-004-1041, Respiratory Protection – Respirator Cleaning Procedures (Mandatory)

These are general procedures for cleaning respirators. You may also use the manufacturer's recommendations if they meet the objectives of these procedures to prevent harm to the user and/or damage to the respirator.

I. Procedures for Cleaning Respirators

(A) Remove filters, cartridges, or canisters. Disassemble face pieces by removing speaking diaphragms, demand and pressure-demand valve assemblies, hoses, or any components recommended by the manufacturer. Discard or repair any defective parts.

(B) Wash components in warm (43 degrees C. [110 degrees F.] maximum) water with a mild detergent or with a cleaner recommended by the manufacturer. A stiff bristle (not wire) brush may be used to facilitate the removal of dirt.

(C) Rinse components thoroughly in clean, warm (43 degrees C. [110 degrees F.] maximum), preferably running water. Drain.

(1) When the cleaner does not contain a disinfecting agent, immerse respirator components for 2 minutes in one of the following:

(2) Hypochlorite solution (50 ppm of chlorine) of approximately one-milliliter of laundry bleach and one liter of water at 43 degrees C. (110 degrees F.); or,

(3) Aqueous solution of iodine (50 ppm iodine) of approximately 0.8 milliliters of tincture of iodine (6-8 grams ammonium and/or potassium iodide/100 cc of 45 percent alcohol) to one liter of water at 43 degrees C. (110 degrees F.); or,

(D) Other commercially available cleansers of equivalent disinfectant quality, if the respirator manufacturer recommends their use.

(E) Rinse components thoroughly in clean, warm (43 degrees C. [110 degrees F.] maximum), preferably running water. Drain. Thorough rinsing is extremely important. Detergents or disinfectants that dry on face pieces may cause dermatitis. In addition, some disinfectants may cause deterioration of rubber or corrosion of metal parts if not completely removed.

(F) Components should be hand-dried with a clean lint-free cloth or air-dried.

(G) Reassemble face piece, replacing filters, cartridges, and canisters where necessary.

(H) Test the respirator to ensure that all components work properly.

Stat. Auth.: ORS 654.025(2) and 656.726(4).
Stats. Implemented: ORS 654.001 through 654.295.
Hist: OR-OSHA Admin. Order 3-2006, f. 6/7/06, ef. 3/1/07.
OR-OSHA Admin. Order 3-2007, f. 8/13/07, ef. 8/13/07.
OR-OSHA Admin. Order 4-2012, f. 9/19/12, ef. 1/1/13.

RESPIRATOR MEDICAL EVALUATION QUESTIONNAIRE

Appendix C to OAR 437-004-1041, Respiratory Protection

RESPIRATOR MEDICAL EVALUATION QUESTIONNAIRE (MANDATORY)

EMPLOYEE: Your employer must allow you to answer this questionnaire during normal working hours, or at a time and place that is convenient to you. To maintain your confidentiality, your employer or supervisor must not look at or review your answers. Your employer must tell you how to send or deliver this questionnaire to the health care professional who will review it.

Part A. Section 1. Every employee selected to use any type of respirator must provide the following information (please print).

Date: _____

Name: _____ Job Title: _____

Age: _____ Sex: M / F Height: _____ Weight: _____
Phone #: ( )_____-_____

A phone number where the health care professional can reach you (include the Area Code):
( )_____-_____

The best time to phone you at this number: _____

Has your employer told you how to contact the health care professional who will review this questionnaire (circle one)? Yes / No

Check the type of respirator you will use (you can check more than one category):

a. ____ N, R, or P disposable respirator (filter-mask, non-cartridge type only).

b. ____ Other type (for example, half or full-face type, powered-air purifying, supplied-air, self-contained breathing apparatus).

Have you worn a respirator (circle one)? Yes / No

If "yes", what type(s): _____

RESPIRATOR MEDICAL EVALUATION QUESTIONNAIRE

Part A. Section 2. Every employee selected to use any type of respirator must answer questions 1 through 9 below (please circle "yes" or "no").

1. Do you *currently* smoke tobacco, or have you smoked tobacco in the last month? Yes / No

2. Have you *ever* had any of the following conditions?
   a. Seizures (fits) Yes / No
   b. Diabetes (sugar disease) Yes / No
   c. Allergic reactions that interfere with your breathing Yes / No
   d. Claustrophobia (fear of closed-in places) Yes / No
   e. Trouble smelling odors Yes / No

3. Have you *ever* had any of the following pulmonary or lung problems?
   a. Asbestosis Yes / No
   b. Silicosis Yes / No
   c. Asthma Yes / No
   d. Pneumothorax (collapsed lung) Yes / No
   e. Chronic bronchitis Yes / No
   f. Lung cancer Yes / No
   g. Emphysema Yes / No
   h. Broken ribs Yes / No
   i. Pneumonia Yes / No
   j. Any chest injuries or surgeries Yes / No
   k. Tuberculosis Yes / No
   l. Any other lung problem that you have been told about Yes / No

4. Do you *currently* have any of the following symptoms of pulmonary or lung illness?
   a. Shortness of breath Yes / No
   b. Shortness of breath when walking fast on level ground or walking up a slight hill or incline Yes / No
   c. Shortness of breath when walking with other people at an ordinary pace on level ground Yes / No
   d. Have to stop for breath when walking at your own pace on level ground Yes / No
   e. Shortness of breath when washing or dressing yourself Yes / No
   f. Shortness of breath that interferes with your job Yes / No
   g. Coughing that produces phlegm (thick sputum) Yes / No
   h. Coughing that wakes you early in the morning Yes / No
   i. Coughing that occurs mostly when you are lying down Yes / No
   j. Coughing up blood in the last month Yes / No
   k. Wheezing Yes / No

l. Wheezing that interferes with your job Yes / No
m. Chest pain when you breath deeply Yes / No
n. Any other symptoms that you think may be related to lung problems Yes / No

5. Have you *ever* had any of the following cardiovascular or heart problems?
   a. Heart attack Yes / No
   b. Stroke Yes / No
   c. Angina Yes / No
   d. Heart failure Yes / No
   e. Swelling in your legs or feet (not caused by walking) Yes / No
   f. Heart arrhythmia (heart beating irregularly) Yes / No
   g. High blood pressure Yes / No
   h. Any other heart problems that you have been told about Yes / No

6. Have you *ever* had any of the following cardiovascular or heart symptoms?
   a. Frequent pain or tightness in your chest Yes / No
   b. Pain or tightness in your chest during physical activity Yes / No
   c. Pain or tightness in your chest that interferes with your job Yes / No
   d. In the past 2 years, have you noticed your heart skipping or missing a beat Yes / No
   e. Heartburn or indigestion that is not related to eating Yes / No
   f. Any other symptoms that you think may be related to heart or circulation problems Yes / No

7. Do you *currently* take medication for any of the following problems?
   a. Breathing or lung problems Yes / No
   b. Heart trouble Yes / No
   c. Blood pressure Yes / No
   d. Seizures (fits) Yes / No

8. If you have used a respirator, have you *ever* had any of the following problems? (If you have *never* used a respirator continue to question 9)
   a. Eye irritation Yes / No
   b. Skin allergies or rashes Yes / No
   c. Anxiety Yes / No
   d. General weakness or fatigue Yes / No
   e. Any other problem that interferes with your use of a respirator Yes / No

9. Would you like to discuss your answers with the health care professional who will review this questionnaire? Yes / No

Employees who will use either a full-face respirator OR a self-contained breathing apparatus (SCBA) MUST answer Questions 10 through 15:

10. Have you ever lost vision in either eye temporarily or permanently? Yes / No

11. Do you *currently* have any of the following vision problems?
    a. Wear contact lenses — Yes / No
    b. Wear glasses — Yes / No
    c. Color blind — Yes / No
    d. Any other eye or vision problem — Yes / No

12. Have you *ever* had an injury to your ears, including a broken ear drum? — Yes / No

13. Do you *currently* have any of the following hearing problems?
    a. Difficulty hearing — Yes / No
    b. Wear a hearing aid — Yes / No
    c. Any other hearing or ear problem — Yes / No

14. Have you *ever* had a back injury? — Yes / No

15. Do you *currently* have any of the following musculoskeletal problems?
    a. Weakness in any of your arms, hands, legs, or feet — Yes / No
    b. Back pain — Yes / No
    c. Difficulty fully moving your arms and legs — Yes / No
    d. Pain or stiffness when you lean forward or backward at the waist — Yes / No
    e. Difficulty fully moving your head up or down — Yes / No
    f. Difficulty fully moving your head side to side — Yes / No
    g. Difficulty bending at your knees — Yes / No
    h. Difficulty squatting to the ground — Yes / No
    i. Climbing a flight of stairs or a ladder carrying more than 25 pounds — Yes / No
    j. Any other muscle or skeletal problem that interferes with using a respirator — Yes / No

Part B. Section 1. The health care professional who will review this questionnaire may – at their discretion – add these questions and any other questions pertinent to this evaluation.

1. In your present job are you working at high altitudes (over 5,000 feet) or in a place that has lower than normal amounts of oxygen? — Yes / No

   If "Yes," do you have feelings of dizziness, shortness of breath, pounding in your chest, or other symptoms when you are working under these condition? — Yes / No

RESPIRATOR MEDICAL EVALUATION QUESTIONNAIRE

2. At work or at home, have you ever been exposed to hazardous solvents, hazardous airborne chemicals (e.g., gases, fumes, or dust), or have you come into skin contact with hazardous chemicals? Yes / No

   If "Yes," name the chemicals if you know them: _____
   _____

3. Have you ever worked with any of the materials, or under any of the conditions listed below:
   a. Asbestos Yes / No
   b. Coal (for example, mining) Yes / No
   c. Silica (e.g., sandblasting) Yes / No
   d. Iron Yes / No
   e. Tungsten/cobalt (grinding or welding this material) Yes / No
   f. Tin Yes / No
   g. Dusty environments Yes / No
   h. Beryllium Yes / No
   i. Any other hazardous exposures Yes / No
   j. Aluminum Yes / No

   If "Yes," describe these exposures: _____
   _____

4. List any second jobs or side businesses you have: _____
   _____

5. List your previous occupations: _____
   _____

6. List your current and previous hobbies: _____
   _____

7. Were you ever in the military services? Yes / No

   If "yes" were you exposed to biological or chemical agents (either in training or combat)? Yes / No

8. Have you ever worked on a HAZMAT team? Yes / No

9. Other than medications for breathing and lung problems, heart trouble, blood pressure, and seizures mentioned earlier in this questionnaire, are you taking any other medications for any reason (including over-the-counter medications)? Yes / No

   If "Yes," name the medications if you know them: _____
   _____

NOTES:

Part B. Section 2. The EMPLOYER must provide this supplemental information to the health care professional (PLHCP) who will review the employee's medical questionnaire:

EMPLOYEE'S NAME: _____

EMPLOYEE'S JOB TITLE/CLASSIFICATION: _____

1. What type of respirator will this employee use?
   Check the type(s) below (you can check more than one category):
   - _____ N-, R-, or P- filtering facepiece (disposable, "dust mask" type)
   - _____ Tight-fitting, air-purifying half-mask,
   - _____ Tight-fitting full-face mask
     - _____ Air-purifying type
     - _____ Supplied air type
   - _____ Powered-air purifying respirator (PAPR)
     - _____ Tight-fitting, full face mask
     - _____ Loose-fitting helmet or hood
   - _____ Self-Contained Breathing Apparatus (SCBA)
   - _____ Escape (gas mask)

2. What is the approximate weight of the respirator and any tanks or air hoses?
   _____

3. Will the employee use any of the following items with these respirator(s)?
   a. HEPA filters Yes / No
   b. Canisters (gas masks) Yes / No
   c. Cartridges (air-purifying) Yes / No

4. How often will the employee use the respirator(s)? (circle "yes" or "no" for all answers that apply)
   a. Escape only (no rescue duties) Yes / No
   b. Less than 2 hrs. per day Yes / No
   c. Emergency rescue only Yes / No
   d. 2 to 4 hrs. per day Yes / No
   e. Less than 5 hrs. per week Yes / No
   f. over 4 hrs. per day Yes / No

5. When the employee uses the respirator(s), is their work effort:

   a. Light (less than 200 kcal per hour) Yes / No

   If "yes" how long does this period last during the average shift:
   hrs._____ mins._____

   Examples of light work effort are sitting while writing, typing, drafting, or performing light assembly work; or standing while controlling machines.

   b. Moderate (200 to 350 kcal per hour): Yes / No

   If "yes" how long does this period last during the average shift:
   hrs._____ mins._____

   Examples of moderate work effort are sitting while nailing or filing: driving a truck, drilling, nailing performing assembly work, or transferring a moderate load (about 35 pounds) at trunk level; walking on a level surface about 2 mph or down a 5 degree grade about 3 mph; or pushing a wheelbarrow with a heavy load (about 100 pounds) on a level surface. (**NOTE:** A gallon of water weighs about 8 lbs; so, a full, 3-gallon, backpack sprayer weights about 25 lbs.)

   c. Heavy (above 350 kcal per hour): Yes / No

   If "yes" how long does this period last during the average shift?
   hrs._____ mins._____

   Examples of heavy work are lifting a heavy load (about 50 pounds) from the floor to your waist or shoulder; working on a loading dock; shoveling; standing while bricklaying or chipping castings; walking up an 8 degree grade about 2 mph, climbing stairs with a heavy load (about 50 pounds).

RESPIRATOR MEDICAL EVALUATION QUESTIONNAIRE

6. Will the employee wear protective clothing and/or equipment (other than the respirator) when using their respirator? Yes / No

   If "yes," describe this protective clothing and/or equipment:_____
   _____

7. Will they be working in hot conditions (temperature more than 77 degrees F)? Yes / No

8. Will they be working in humid conditions? Yes / No

9. Describe the work they will be doing while using their respirator(s): _____
   _____

10. Describe any special or hazardous conditions they might encounter when using a respiratory protection (for example, confined spaces, oxygen-deficient atmospheres, life threatening gases): _____
    _____

11. Provide the following information, if you know it, for each toxic substance that they will be exposed to when using their respirator(s):

    Name of the first toxic substance:_____

    Estimated maximum exposure level per shift: _____

    Duration of exposure per shift: _____

    Name of the second toxic substance: _____

    Estimated maximum exposure level per shift: _____

    Duration of exposure per shift: _____

    Name of the third toxic substance: _____

    Estimated maximum exposure level per shift: _____

    Duration of exposure per shift: _____

    Name of any other toxic substances that they will be exposed to while using a respirator:
    _____

12. Describe any special responsibilities they will have while using their respirator(s) that may affect the safety and well-being of others (i.e., rescue, security):_____
    _____

Stat. Auth.: ORS 654.025(2) and 656.726(4).
Stats. Implemented: ORS 654.001 through 654.295.
Hist: OR-OSHA Admin. Order 3-2006, f. 6/7/06, ef. 3/1/07.
OR-OSHA Admin. Order 4-2012, f. 9/19/12, ef. 1/1/13.

Apéndice C de OAR 437-004-1041, Protección de la Respiración
CUESTIONARIO PARA EVALUACION MEDICA RESPIRATORIA

(OBLIGATORIO)

TRABAJADOR: Su empleador debe permitirle contestar estas preguntas durante horas normales de trabajo o durante un tiempo y lugar que le sea conveniente a usted. Para mantener su confidencialidad, su empleador o supervisor no debe ver o revisar sus respuestas. Su empleador deberá decirle como enviar o entregar este cuestionario al profesional de cuidado de la salud que lo revisará.

Parte A. Sección 1.

Cada trabajador elegido para usar cualquier tipo de respirador debe proporcionar la siguiente información (use letra de molde).

Fecha: _____

Nombre: _____ Ocupación, título o tipo de trabajo: _____ _____

Edad: _____ Género: M / F Estatura: _____ Peso: _____

Número de Teléfono: (__)____-_____

Dé un número de teléfono donde el profesional de salud que revisará este cuestionario pueda comunicarse con usted (incluya el Código de Área)
La mejor hora de hablarle ha este teléfono: _____

¿Su patrón le explicó como comunicarse con el profesional de salud que revisará este cuestionario? (circule uno) Sí / No

Marque el tipo de respirador que usará (puede marcar más de una categoría):

a. ____ N, R, o P respirador desechable (máscara de filtro solamente sin cartucho).
b. ____ Otro tipo (por ejemplo, máscara de media cara o cara completa, purificadores motorizados, de suministro de aire, equipo autónomo de respiración).

¿Ha usado usted un respirador antes? (circule uno) Sí / No

Si “afirmativo”, ¿que tipo(s)?:

_____

CUESTIONARIO PARA EVALUACION MEDICA RESPIRATORIA

Parte A. Sección 2

Cualquier trabajador elegido ha usar cualquier tipo de respirador debe contestar las preguntas del 1 al 9 (circule sí o no).

1. ¿En la *actualidad*, fuma tabaco, o ha fumado tabaco en el último mes? Si / No

2. ¿Ha padecido usted de lo siguiente?
   a. Convulsiones Si / No
   b. Diabetes (azúcar en la sangre) Si / No
   c. Reacciones alérgicas que interfieren con su respiración Si / No
   d. Claustrofobia (temor a espacios cerrados) Si / No
   e. Problemas del olfato Si / No

3. ¿Ha padecido en *cualquier tiempo* usted de los siguientes problemas pulmonares?
   a. Asbestosis Si / No
   b. Silicosis Si / No
   c. Asma Si / No
   d. Neumotorax (desinfle del pulmón) Si / No
   e. Bronquitis crónica Si / No
   f. Cáncer del pulmón Si / No
   g. Enfisema Si / No
   h. Fracturas de las costillas Si / No
   i. Neumonía Si / No
   j. Cualquier lesión o cirugía del pecho Si / No
   k. Tuberculosis Si / No
   l. Cualquier otro problema del pulmón del cual se le ha informado Si / No

4. ¿*Actualmente* tiene usted alguno de los siguientes síntomas pulmonares o enfermedades del pulmón?
   a. Falta de aire Si / No
   b. Falta de aire cuando camina rápido sobre una superficie plana o una cuesta leve o una inclinación Si / No
   c. Falta de aire cuando camina con otras personas a un ritmo normal sobre una superficie plana Si / No
   d. Tener que detenerse a coger aire cuando camina a su propio paso sobre superficie plana Sí / No
   e. Falta de aire cuando usted se lava o se viste Sí / No
   f. Falta de aire que interfiere con su trabajo Sí / No
   g. Tos que produce flema espesa Sí / No
   h. Tos que lo despierta temprano por la mañana Sí / No
   i. Tos que se pasa más cuando esta acostado Sí / No
   j. Tos con sangre (durante el ultimo mes) Sí / No
   k. Respiración jadeante Sí / No

l. Respiración jadeante, que interfiere con su trabajo Sí / No
m. Dolor en el pecho cuando respira profundamente Sí / No
n. Cualquier otro síntoma que usted cree que puede estar relacionado con problemas del pulmón Sí / No

5. ¿Ha padecido en *cualquier tiempo* alguno de los siguientes problemas cardiovasculares o del corazón?

a. Ataque al corazón Sí / No
b. Derrame cerebral o Embolia Sí / No
c. Angina Sí / No
d. Falla del corazón Sí / No
e. Hinchazón de las piernas o pies (no causado por el andar) Sí / No
f. Arritmias del corazón (palpitación irregular) Sí / No
g. Presión alta de la sangre Sí / No
h. Otros problemas del corazón del cual se le ha informado Sí / No

6. ¿Ha padecido *cualquier tiempo* los siguientes síntomas cardiovasculares o del corazón?

a. Dolor o presión frecuente del pecho Sí / No
b. Dolor o presión en el pecho durante actividad física Sí / No
c. Dolor o presión en el pecho que interfiere con su trabajo Sí / No
d. En los últimos dos años ha notado que le salta o le falta un latido al corazón Sí / No
e. Agrura o indigestión, no ocasionada por la comida Sí / No
f. Otros síntomas los cuales usted cree están relacionados a problemas del corazón o la circulación Sí / No

7. ¿ *Actualmente* toma usted medicamentos para algunos de los siguientes problemas?

a. Problemas de la respiración o de los pulmones Sí / No
b. Problemas del corazón Sí / No
c. Presión Sí / No
d. Convulsiones Sí / No

8. *Si usted ha usado* un respirador, ¿ha tenido en alguna ocasión alguno de los siguientes problemas? (Si nunca ha usado un respirador por favor salte a la pregunta 9).

9. Quiere hablar de sus respuestas con el profesional de salud que revisará su cuestionario? Sí / No\

Trabajadores que usarán *un respirador de cara completa O Equipo Autónomo de Respiración (SCBA)* DEBERÁN contestar las preguntas del 10 al 15:

10. ¿Ha perdido la visión temporalmente o permanentemente en uno o ambos ojos? Sí / No

11. ¿*Actualmente* tiene alguno de los siguientes problemas de la vista?

a. Usa lentes de contacto Sí / No
b. Usa anteojos Sí / No
c. Dificultad para distinguir los colores Sí / No
d. Otros problemas con los ojos o la visón Sí / No

12. ¿Ha tenido *cualquier tiempo* una lesión en los oídos, incluyendo daño al tímpano? Si / No

13. ¿ *Actualmente* tiene alguno de los siguientes problemas con los oídos?

a. Dificultad al oír Sí / No
b. Usa prótesis en el oído Sí / No
c. Cualquier otro problema con la audición o el oído Sí / No

14. ¿ Se ha lesionado la espalda? Si / No

15. ¿ Actualmente tiene alguno de los siguientes problemas músculo esqueléticos?

a. Debilidad en cualquiera de los brazos, manos, piernas, o pies Sí / No
b. Dolor de la espalda Sí / No
c. Dificultad para mover completamente los brazos y piernas Sí / No
d. Dolor o entumecimiento al inclinarse hacia delante o atrás desde la cintura Sí / No
e. Dificultad en mover la cabeza completamente hacia arriba o abajo Sí / No
f. Dificultad en mover la cabeza completamente de un lado a otro Sí / No
g. Dificultad en doblar las rodillas Sí / No
h. Dificultad en ponerse de cuclillas Sí / No
i. Subiendo escalones o una escalera cargando más de 25 libras Sí / No
j. Cualquier otro problema del esqueleto o de los músculos que pueda interferir con usar un respirador Sí / No

Parte B. Sección 1

El profesional de la salud que revisará este cuestionario puede añadir a su discreción las siguientes preguntas y cualquier otra pregunta no listada.

1. ¿En su presente trabajo, trabaja en alturas elevadas (a más de 5,000 pies) o en lugares con niveles de oxigeno más bajas de lo normal? Sí / No

¿*Si "afirmativo"*, tiene mareos, falta de aire, presión en el pecho, u otros síntomas cuando está trabajando bajo estas condiciones? Sí / No

CUESTIONARIO PARA EVALUACION MEDICA RESPIRATORIA

2. ¿En el trabajo o su casa, ha sido usted expuesto a solventes peligrosos, químicos peligrosos transportados por el aire, (gases, humos, o polvos), o haentrado su piel en contacto con químicos peligrosos? Si / No

Si es afirmativo, nombre del (los) químico(s): _____

_____

3. ¿Ha trabajado usted con los siguientes materiales, o bajo alguna de las siguientes condiciones?

a. Asbesto Sí / No
b. Carbón (por ejemplo, en minas) Sí / No
c. Sílice (por ejemplo con chorro de arena) Sí / No
d. Hierro Sí / No
e. Tungsteno/cobalto (limando o soldando este material) Sí / No
f. Estaño Sí / No
g. Ambientes polvorosos Sí / No
h. Berilio Sí / No
i. Cualquier otras exposiciones peligrosas Sí / No
j. Aluminio Sí / No

Si es afirmativo, describa la(s) exposición(es): _____

_____

4. Liste segundos trabajos o negocios paralelos que usted tiene: _____

_____

5. Liste sus ocupaciones anteriores: _____

_____

6. Liste pasatiempos presentes y pasados: _____

_____

7. ¿Estuvo en el servicio militar? Si / No

Si "afirmativo", ¿estuvo expuesto a agentes biológicos o químicos (durante entrenamiento o combate)? Si / No

8. ¿ Ha trabajado en un equipo de limpieza de materiales peligrosos (HAZMAT)? Si / No

9. ¿Fuera de medicinas para la respiración, los pulmones, problemas del corazón, presión, y convulsiones mencionadas anteriormente en este cuestionario, está usted tomando otras medicinas por cualquier razón (incluyendo medicinas sin receta médica)? Sí / No

   Si "afirmativo", nombre las medicinas: _____

   _____

APUNTES:
Parte B. Sección 2.

El EMPLEADOR deberá proporcionar esta información suplementaria al profesional de cuidado de la salud (PLHCP) que revisará el cuestionario médico del trabajador:

NOMBRE DEL TRABAJADOR: _____

POSICIÓN DEL TRABAJADOR:

_____

1. ¿Qué tipo de respirador usará este trabajador?

Marque el (los) tipo(s) que siguen (puede marcar más de una categoría):

_____ N-, R-, o P- máscara filtrante (desechable, tipo "máscara de polvo").
_____ De ajuste apretado de purificación de media cara
_____ De ajuste apretado de cara completa
_____ De tipo de purificación de aire
_____ De tipo de línea

_____ Respirador purificador de aire motorizado (PAPR)
  _____ De ajuste apretado, de cara completa
  _____ De ajuste apretado de casco o capucha
_____ Equipo Autónomo de Respiración (SCBA)
_____ Escape (máscara de gas)

2. ¿Cuál es el peso aproximado del respirador, y cualquier tanque o mangueras?

   _____

3. ¿El trabajador va a utilizar alguno de los siguientes artículos con su(s) respirador(es)?

   a. Filtros HEPA Sí / No
   b. Cánisters (máscaras para gas) Sí / No
   c. Cartuchos (purificación de aire) Sí / No

4 ¿Con que frecuencia usará el trabajador el respirador? (circule sí o no a toda las preguntas que apliquen)

a. Solamente para escape (sin deberes de rescate) Sí / No
b. Menos de 2 horas por día Sí / No
c. Rescate de emergencia solamente Sí / No
d. 2 a 4 horas por día Sí / No
e. Menos de 5 horas por semana Sí / No
f. Más de 4 horas por día Sí / No

5. ¿Durante el período que el trabajador usa el respirador, el esfuerzo de trabajo es?

a. Liviano (menos de 200 Kcal por hora) Sí / No

Ejemplos de trabajo liviano es estar sentado al escribir, computación, haciendo planos, o realizando ensamble ligero, o de pie operando máquinas.
Si "afirmativo", cuanto tiempo dura esto en un turno promedio:
horas _____ minutos _____

b. Moderado (200 a 350 Kcal por hora) Sí / No

Ejemplos de trabajo moderado son: estar sentado martillando o limando, manejado un camión, perforando, o ensamble, moviendo cargas moderadas (aproximadamente 25 – 35 libras) a nivel de la cintura caminando en superficie planas a 2 millas por hora o bajando un nivel de terreno de 5 grados a 3 millas por hora, o empujando una carretilla con carga pesada (aproximadamente 100 libras) en superficie plana. (NOTA: Un galón de agua peso aproximadamente 8 libras, o sea, un rociadora de mochila llena con 3 galones pesa aproximadamente 25 libras.)

Si "afirmativo", cuanto tiempo dura esto en un turno promedio:
horas _____ minutos _____

c. Pesado (más de 350 Kcal por hora) Sí / No

Ejemplos de trabajo pesado son: levantar cargas pesadas(aproximadamente 50 libras) del suelo a la altura de la cintura u hombros, trabajando en un plataformas de carga, trabajo con pala, albañilería de pie, desbarbando piezas de fundición, subiendo niveles de terreno de 8 grados aproximadamente a 2 millas por hora, subiendo escalones con cargas pesadas (aproximadamente 50 libras)

Si "afirmativo", cuanto tiempo dura esto en un turno promedio:
horas _____ minutos _____

6. ¿El trabajador va a utilizar ropa o equipo protector aparte del respirador? Sí / No

   Si "afirmativo" describa el equipo que va a usar:

   _____

   _____

7. ¿El trabajador va a trabajar en temperaturas altas (temperaturas más de 77 F)? Sí / No

8. ¿El trabajador va a trabajar en condiciones húmedas? Sí / No

9. Describa el trabajo que hará el trabajador mientras usa su respirador(es):

   _____

   _____

10. Describa algunas condiciones especiales o condiciones peligrosas las cuales el trabajador puede enfrentar cuando usa el respirador (por ejemplo, espacios confinados, atmósferas deficientes en oxígeno, gases fulminantes):

   _____

   _____

11. Proporcione la siguiente información si lo sabe, para cada substancia tóxica a que el trabajador puede ser expuesto cuando usa el respirador(es):

Nombre de la primera substancia tóxica: _____
Nivel máximo de exposición por turno de trabajo: _____
Tiempo de exposición por turno de trabajo: _____

Nombre de la segunda substancia tóxica: _____
Nivel máximo de exposición por turno de trabajo: _____
Tiempo de exposición por turno de trabajo: _____

Nombre de la tercera substancia tóxica: _____
Nivel máximo de exposición por turno de trabajo: _____
Tiempo de exposición por turno de trabajo: _____

Nombre(s) de cualquier otra substancia(s) tóxica(s) a la cual el trabajador pueda ser expuesto mientras usa un respirador:

_____

_____

12. Describa otras responsabilidades especiales que tendrán durante el tiempo que estarán usando respiradores y que puedan afectar la seguridad y bienestar de otras personas (por ejemplo, rescate, seguridad):

_____

Stat. Auth.: ORS 654.025(2) and 656.726(4).
Stats. Implemented: ORS 654.001 through 654.295.
Hist: OR-OSHA Admin. Order 3-2006, f. 6/7/06, ef. 3/1/07.
OR-OSHA Admin. Order 4-2012, f. 9/19/12, ef. 1/1/13.

Appendix D to OAR 437-004-1041 – Information for Employees Voluntarily Using Respirators (Mandatory)

Respirators are an effective method of protection against designated hazards when properly selected and worn. Oregon OSHA encourages respirator use, even when exposures are below the exposure limit, to provide an additional level of comfort and protection for workers. However, if you improperly use a respirator or do not keep it clean, the respirator itself can become a hazard. Sometimes, workers may wear respirators to avoid exposures to hazards, even if the amount of hazardous substance does not exceed the limits set by Oregon OSHA standards. If your employer provides respirators for your voluntary use, of if you provide your own respirator, you need to take certain precautions to be sure that the respirator itself does not present a hazard.

You should do the following:

1. Read and follow all instructions from the manufacturer on use, maintenance, cleaning and care, and warnings regarding the respirators limitations.

2. Choose respirators certified for use to protect against the contaminant of concern. NIOSH, the National Institute for Occupational Safety and Health of the U.S. Department of Health and Human Services, certifies respirators. A label or statement of certification should appear on the respirator or respirator packaging. It will tell you what the respirator is designed for and how much it will protect you.

3. Do not wear your respirator into atmospheres with contaminants that it is not designed to protect against. For example, a respirator designed to filter dust particles will not protect you against gases, vapors, or very small solid particles of fumes or smoke.

4. Keep track of your respirator so that you do not mistakenly use someone else's respirator.

Stat. Auth.: ORS 654.025(2) and 656.726(4).
Stats. Implemented: ORS 654.001 through 654.295.
Hist: OR-OSHA Admin. Order 3-2006, f. 6/7/06, ef. 3/1/07.
OR-OSHA Admin. Order 4-2012, f. 9/19/12, ef. 1/1/13.

Apéndice D to OAR 437-004-1041 – Información para Trabajadores que Usan Respiradores Voluntariamente (Obligatorio)

Los respiradores que son seleccionados y usados correctamente son un método de protección efectivo contra peligros designados. Oregon OSHA promueve el uso de respiradotes, aunque la exposición sea menor al límite permitido de exposición, para proveer un mejor nivel de comodidad y protección a los trabajadores. Sin embargo, si usted usa su respirador de manera incorrecta o si la limpieza adecuada no es mantenida, el respirador mismo podría convertirse en un peligro. Los trabajadores pueden usar los respiradores para evitar la exposición a peligros aunque la cantidad de substancias peligrosas no exceda los límites establecidos bajo las reglas de Oregon OSHA. Si su empleador provee respiradores para uso voluntario, o si usted provee su propio respirador, necesita tomar ciertas precauciones para asegurarse de que el respirador no presenta ningún peligro.

Usted debería hacer lo siguiente:

1. Lea y siga todas las instrucciones del fabricante acerca del uso, mantenimiento, limpieza y cuidado. También siga las instrucciones acerca de las advertencias en cuanto a las limitaciones del respirador.

2. Elija respiradores que sean certificados para ser usados en la clase de atmósfera contaminada, específica a su situación El Instituto Nacional para Salud y Seguridad Ocupacional del Departamento de Salud y Servicios Humanos (NIOSH por sus siglas en inglés) certifica respiradores. Una certificación o declaración que debe aparecer en el respirador o paquete del respirador le dirá para qué clase de uso el respirador está diseñado y la capacidad de protección que éste ofrece.

3. No use su respirador en atmósferas que contengan contaminantes si éste no esta diseñado para protegerlo en esos ambientes. Por ejemplo, un respirador que esta diseñado para filtrar partículas de polvo, no lo protegerá contra gases, vapores o partículas sólidas muy pequeñas de humo.

4. Marque su respirador claramente para que por error usted no use el respirador de otra persona.

Stat. Auth.: ORS 654.025(2) and 656.726(4).
Stats. Implemented: ORS 654.001 through 654.295.
Hist: OR-OSHA Admin. Order 3-2006, f. 6/7/06, ef. 3/1/07.
OR-OSHA Admin. Order 4-2012, f. 9/19/12, ef. 1/1/13.

437-004-1050 Head Protection.

NOTE: See Division 4/W, 437-004-6000, 170.240(c)(10) for information about the chemical-resistant headwear requirements for pesticide handlers.

(1) General requirements. Require employees to wear head protection (helmets or hardhats) when working in areas where there is a potential for injury to the head such as from falling or flying objects or electrical hazards.

(2) Criteria for protective headwear.

(a) Head protection must comply with any of the following consensus standards:

(A) ANSI Z89.1-2003, "American National Standard for Industrial Head Protection;"

(B) ANSI Z89.1-1997, "American National Standard for Industrial Head Protection;" or

(C) ANSI Z89.1-1986, "American National Standard for Personnel Protection – Protective Headwear for Industrial Workers – Requirements."

NOTE: The Oregon OSHA Resource Center has copies of these standards or public review at 350 Winter Street NE, Salem OR.

(b) Protective headwear that the employer demonstrates is at least as effecive as protective headwear that is constructed in accordance with one of the above consensus standards will be deemed to be in compliance with the requirements of this section.

(3) Require employees who work close to moving parts of power-driven machinery or sources of ignition and whose hair is long enough to be caught in it or to be ignited, to wear caps or other head coverings that completely restrains the hair.

NOTE: See Divisions 4/O and 4/P for equipment and tool guarding requirements.

Stat. Auth.: ORS 654.025(2) and 656.726(4).
Stats. Implemented: ORS 654.001 through 654.295.
Hist: OR-OSHA Admin. Order 4-1998, f/8/28/98, ef. 10/1/98.
OR-OSHA Admin. Order 2-2010, f. 2/25/10, ef. 2/25/10.
OR-OSHA Admin. Order 4-2012, f. 9/19/12, ef. 1/1/13.

437-004-1060 Hand, Foot, and Extremity Protection.

NOTES:
See Division 4/P, 437-004-2220(10) for the protective equipment requirements (appropriate gloves, aprons and leg guards) for employees using sharp-edged cutting tools.

See Division 4/P, 437-004-2230 for requirements for PPE while using chain saws.

See Division 4/W, 437-004-6000, 170.240(c)(5) and (6) for information about the requirements for gloves and chemical-resistant footwear for pesticide handlers.

(1) General requirements for hand protection.

(a) Employers must select and require employees to use appropriate hand protection when the work exposes employees' hands to hazards such as contact with harmful substances; severe cuts, lacerations, or abrasions; punctures; chemical burns; electrical hazards; harmful temperature extremes.

(b) Do not allow the use of leather or other absorbent materials to protect against chemical hazards.

(c) Do not allow employees to wear gloves near moving parts or machines that might catch them.

NOTE: See Divisions 4/O and 4/P for equipment and tool guarding requirements.

(2) General requirements for protective footwear.

(a) Require employees to use appropriate protective footwear when there is a danger of foot injuries due to falling or rolling objects, objects piercing the sole, chemical exposures, or electrical hazards.

(b) Protective footwear must comply with any of the following consensus standards:

(A) ASTM F-2412-2005, "Standard Test Methods for Foot Protection," and ASTM F-2413-2005, "Standard Specification for Performance Requirements for Protective Footwear;"

(B) ANSI Z41-1999, "American National Standard for Personal Protection – Protective Footwear;" or

(C) ANSI Z41-1991, "American National Standard for Personal Protection – Protective Footwear."

NOTES:
Look for ANSI compliance information on the shoe, the box or tags.

The Oregon OSHA Resource Center has copies of these consensus standards for public review at 350 Winter Street NE, Salem OR.

(c) Protective footwear that the employer demonstrates is at least as effective as footwear that is constructed in accordance with one of the above consensus standards will be deemed to be in compliance with the requirements of this section.

(3) Protection of Extremities.

(a) Require employees to wear leggings or high boots of leather, rubber or other suitable material to protect legs from physical hazards such as hot or cold substances, or sharp objects, and from chemical hazards such as spills or splashes.

(b) Require employees to wear sleeves or long gloves of leather, rubber or other suitable material to protect arms from physical hazards such as hot or cold substances, or sharp objects; and from chemical hazards such as spills or splashes.

(c) Do not allow the use of leather or other absorbent materials to protect against chemical hazards.

NOTE: See Division 4/P, OAR 437-004-2230(1)(c)(G) for the requirement to provide flexible bassistic nylon pads, chaps (or other equivalent protective equipment for the legs from the thigh to the top of the boot) for employees using chain saws.

Stat. Auth.: ORS 654.025(2) and 656.726(4).
Stats. Implemented: ORS 654.001 through 654.295.
Hist: OR-OSHA Admin. Order 4-1998, f/8/28/98, ef. 10/1/98.
OR-OSHA Admin. Order 2-2010, f. 2/25/10, ef. 2/25/10.
OR-OSHA Admin. Order 4-2012, f. 9/19/12, ef. 1/1/13.

437-004-1070 Working Underway on Water.

(1) Definitions.

(a) Boat – means every description of water craft used or capable of being used as a means of transportation on the water, but does not include aircraft built to land on the water.

Examples include rowboats, powerboats, rafts, barges, pontoons, and dredges.

(b) Underway – means when a boat is in or on the water and on the move - not at anchor, not moored, and not made fast to the shore.

(2) Personal flotation devices.

(a) Workers in boats that are underway must wear Coast Guard approved or equivalent, wearable personal flotation devices (PFD).

Exception: A worker below deck or in an enclosed part of a boat, like a cabin or pilot house, need not wear the PFD but must have it readily available.

(b) The PFD provided must be:

(A) The right size for the wearer,

(B) Able to perform the function that the manufacturer intended, and

(C) Maintained according to the manufacturer's requirements and recommendations.

Stat. Authority: ORS 654.025(2) and 656.726(4).
Stats. Implemented: ORS 654.001 through 654.295.
Hist: OR-OSHA Admin. Order 1-2001, f. 1/18/01, ef. 3/1/01.
OR-OSHA Admin. Order 4-2012, f. 9/19/12, ef. 1/1/13.

437-004-1075 Working Over or in Water.

(1) Definition.

(a) Rescue device means a ring buoy and line, gaff pole, throwable rescue device or other device that serves as a means to rescue somebody from the water without requiring the rescuer to enter the water.

(2) Scope and application.

(a) These rules apply where there is a danger of drowning and the water is more than 5 feet deep. These rules do not apply to workers protected by general or personal fall protection.

(b) If employees are engaged in diving and related support operations conducted in connection with Agricultural employment, Division 2, 1910.401 through 1910.440, Commercial Diving Operations, applies.

(3) Personal flotation and rescue devices.

(a) Workers in water, over water on floating or unstable surfaces, or adjacent to water, must wear a Coast Guard approved or equivalent, wearable personal flotation device (PFD).

(b) The PFD must be:

(A) The right size for the wearer,

(B) Able to perform the function that the manufacturer intended, and

(C) Maintained according to the manufacturer's requirements and recommendations.

(c) Piers, docks, wharves and work sites along developed shorelines must have rescue devices available within 200 feet of the water or shoreline work area.

Stat. Authority: ORS 654.025(2) and 656.726(4).
Stats. Implemented: ORS 654.001 through 654.295.
Hist: OR-OSHA Admin. Order 1-2001, f. 1/18/01, ef. 3/1/01.
OR-OSHA Admin. Order 4-2012, f. 9/19/12, ef. 1/1/13.

Appendix A to Subdivision 4/I – (NONMANDATORY)
SAMPLE HAZARD ASSESSMENT for
PERSONAL PROTECTIVE EQUIPMENT (PPE)

NOTE: The following list does not cover all possible hazards that employees may face or for which personal protective equipment may be required. Noisy environments or those that may require respirators must be evaluated with appropriate test equipment to quantify the exposure level when overexposure is suspected.

Employer:

_____
_____
_____

Address:

_____
_____
_____

Workplace/Area/ Job Assessed:

_____
_____
_____

Name / Job Title of Person performing Assessment:

_____
_____

Date(s) of Assessment:

_____

TYPES OF HAZARDS:

A.___IMPACT HAZARDS/ FALLING OBJECTS

1. Is work performed above or below other workers? YES NO
2. Is it possible for an employee to be struck by a falling object? YES NO
3. Are there any activities generating flying fragments/particles? YES NO
4. If "YES," list the sources of falling or flying materials: _____
   _____
   _____
5. Do employees carry heavy objects, which could cause injury if dropped? YES NO
6. Could movement of personnel result in a collision with stationary objects? YES NO
7. Are there any other potential impact hazards, such as moving objects or mechanical processes? YES NO
8. If "YES," list the sources of potential mechanical impact:
   _____
   _____

9. Number and characteristic of this type injury logged in company records for the last 5 years: _____

B.___PENETRATION (by sharp objects)

1. Are there sharp or breakable objects such as glass, scrap metal, nails, wire, staples, or other objects that could penetrate hands or feet used in this area? YES NO
2. Are there sharp tools used in the area? YES NO
3. Are there rough surfaces that could scrape, scratch or abrade the skin? YES NO
4. List the source(s) of penetration hazards: _____
_____
5. Number and characteristic of this type injury logged in company records for the last 5 years: _____
_____

C.___COMPRESSION HAZARDS: CRUSHING/ ROLLING / PINCHING OBJECTS

1. Are forklifts used in employee walk areas? YES NO
2. Do employees use manual material movers? YES NO
3. Are there process hazards that could pinch or crush employee's hands or feet? YES NO
4. Are there bulk rolls of material or heavy pipes handled by employees? YES NO
5. Are there objects that could pinch, crush, or roll over workers? YES NO
6. List the source(s) of compression /pinching/ roll over hazards: _____
_____
_____
7. Number and characteristic of this type injury logged in company records for the last 5 years: _____
_____

D.___CHEMICAL or PESTICIDE EXPOSURE

1. Are chemicals used in the workplace? YES NO
2. If so, do you have a Material Safety Data Sheet for each chemical? YES NO
3. Are there established Permissible Exposure Limits for each chemical? YES NO
4. Is there a splash hazard? YES NO
5. Do the chemicals release mists, vapors or gases? YES NO
6. Will the chemicals irritate the skin or eyes? YES NO

PESTICIDES:

7. Are Pesticide products handled in the workplace YES NO
8. Are label directions for PPE followed for each product? YES NO
9. Number and characteristic of chemical or pesticide-related injury logged in company records for the last 5 years:_____
_____

E.___HIGH or LOW TEMPERATURES (Including possible effects of heat-stress)

1. Are there sources of high temperature in the workplace? YES NO
2. Are there sources of low temperature in the workplace? YES NO
3. Are welding operations performed by employees in the work area? YES NO
4. Are compressed gasses used in the workplace? YES NO
5. Could skin or eye injuries occur from any of the above hazards? YES NO
6. Could temperature extremes adversely affect the PPE chosen? YES NO
7. Could the use of PPE cause heat-related illness? YES NO
8. Number and characteristic of this type injury logged in company records for the last 5 years: _____

F.___HARMFUL DUST or PARTICULATES

1. Are there sources of breathable dust or particulate? YES NO
2. If YES, list the sources of the hazard(s):_____
_____
3. Number and characteristic of this type of injury logged in company records for the last 5 years? _____
_____
_____

G.___LIGHT (optical) RADIATION

1. Are welding, brazing or cutting operations performed in this workplace? YES NO
2. Are furnaces operated in this workplace? YES NO
3. Are there high intensity light sources? YES NO
4. Are any lasers used in this workplace? YES NO
5. Number of this type injury logged in company records for the last 5 years?
_____
_____

H.___OTHER

1. ELECTRICAL
   1. Are there exposed electrical conductors in the work area? YES NO
   2. Can employees come into contact with these conductors? YES NO

2. WORKPLACE LAYOUT HAZARDS:
_____
_____
_____
_____

3. DROWNING HAZARDS:
_____
_____
_____
_____

4. SLIP, TRIP & FALL HAZARDS:

_____
_____

5. OTHER SAFETY ISSUES/ RECOMMENDATIONS

_____
_____
_____
_____

The following list of Personal Protective Equipment (PPE) is recommended while working in this assessed job / work area: (check all that apply)

Hand/ Arm Protection
_____Chemical Resistant Gloves/Sleeves (What chemicals?)
_____Cut Resistant Gloves/Sleeves
_____Heat Resistant Gloves/Sleeves
_____Electrical Protective Gloves/Sleeves
_____Long Sleeves
_____Leather Work Gloves
_____Other: (list)
_____
_____

Head Protection
_____Hard Hat: Class A_____ Class B_____ Class C_____ Other _____
_____Welding Hood (Also, see recommended filter lens rating, under “Eye and Face”)
_____Cap or head covering (to restrain hair)
_____Other: (list)
_____
_____

Foot /Leg Protection
_____Shoe Covers
_____Rubber Boots
_____Chemical Resistant.(What chemical?)
_____Steel toed.
_____Steel shank
_____Metatarsal Guards
_____Other: (list)
_____
_____

Eye and Face Protection
_____Goggles
____Chemical protective
_____Safety Glasses
_____Side Shields
_____Face Shield
Screen_____
Reflective_____
_____Shaded Spectacles
Filter lenses rating_____

_____Welding Helmet
Filter lenses rating_____
_____Welding Shield
_____Welding Goggles
Filter lenses rating_____
_____Other: (list)
_____
_____

Is Hearing Protection used by employees in this area?
_____Required by employer?
NRR needed:_____
_____Ear Plugs
NRR_____
_____Ear Muffs
NRR_____
_____Other: (list)
_____
_____

Chemical Protective Clothing (Choose materials based on exposure to specific chemicals)
_____Lab Coat
_____Smock
_____Apron
Made of: _____
_____Coveralls
Made of: _____
_____Level A Suit
Made of: _____
_____Level B Suit
Made of: _____
_____Level C Suit
Made of: _____
_____Rain Suit
Made of: _____

Is Respiratory Protection used by employees in this area?
_____Required by employer?
_____Voluntary use?

Contaminant(s):
_____
_____

Level of exposure:
_____
_____

_____IDLH?

_____NIOSH-approved "Dust Mask"/Filtering Face Piece
_____Type N
_____Type R
_____Type P
Rating_____95_____99_____99.99

_____Air Purifying Respirator
_____half mask
_____full-face mask

Specify Cartridge(s):
_____
_____

_____Supplied Air System

_____Self Contained Breathing Apparatus (SCBA)

Flotation Devices
_____Life Vest
_____Buoyant Work Vest
_____Other: (list)
_____
_____

Traffic Safety (High Visibility) Clothing
_____Reflective Vest
_____Reflective Suit
_____Other: (list)
_____
_____

Other Recommended Personal Protective Equipment PPE (specify):

_____
_____
_____
_____

Standards or Reference Documents Used:

_____
_____

Stat. Authority: ORS 654.025(2) and 656.726(4).
Stats. Implemented: ORS 654.001 through 654.295.
Hist: OR-OSHA Admin. Order 4-2012, f. 9/19/12, ef. 1/1/13.

– END OF DOCUMENT –

TABLE OF CONTENTS

437-004-1105 Sanitation J-1
(1) General J-1
(2) Disposal of waste materials J-2
(3) Water supply J-2
(4) Toilet facilities J-3
(5) Washing facilities J-3
(6) Change rooms J-3
(7) Consumption of food and beverages on the premises J-3
(8) Vermin control J-4

437-004-1110 Field Sanitation for Hand Labor Work J-4
(1) Scope. J-4
(2) Exceptions. J-4
(3) Definitions J-4
(4) General requirements J-5
(5) Potable drinking water J-5
(6) Toilet and handwashing facilities J-5
(7) Maintenance J-6
(8) Field sanitation notice J-6
(9) Reasonable use J-7

437-004-1120 Agricultural Labor Housing and Related Facilities J-7
(1) Application J-7
(2) J-8
(3) Charging occupants for required services J-8
(4) Definitions J-8
(5) Housing registration requirements J-10
(6) Site requirements J-11
(7) Water supply J-12
(8) Bathing, hand washing, laundry, and toilet facilities – General J-13
(9) Bathing facilities J-14
(10) Hand washing facilities J-14
(11) Laundry facilities J-14
(12) Toilet facilities J-15
(13) Portable toilets, chemical toilets and privies J-16
(14) Sewage disposal and plumbing J-16
(15) Garbage and refuse disposal outside of buildings J-16
(16) Living areas J-17
(17) Fire protection J-19
(18) Common use cooking and eating facilities and equipment J-20

(19) Dining halls and equipment J-21
(20) Single unit cooking facilities J-22
(21) First aid J-23
(22) Disease reporting J-23
(23) Access to ORS and OAR J-24
(24) Closure and alternative housing J-24

437-004-1140 Lighting J-26
(1) General lighting J-26

437-004-1150 Safety Colors for Marking Physical Hazards J-26
(1) Color identification J-26

437-004-1180 Accident Prevention Signs J-26
(1) Scope J-27
(2) Definitions J-27
(3) Classification of signs by use J-27
(4) Sign design J-27
(5) Sign wordings J-28

437-004-1250 Confined and Hazardous Spaces J-29
(1) Definitions J-29
(2) Fuel bins J-29
(3) Entering confined spaces J-29
(4) Training J-32
(5) Rescue J-32

437-004-1260 Manure Lagoons, Storage Ponds, Vats, Pits and Separators J-32
(1) Scope J-32
(2) General J-33

437-004-1275 The Control of Hazardous Energy (Lockout/Tagout) J-34
(1) Scope J-34
(2) Application J-34
(3) Program requirement J-34
(4) Definitions J-34
(5) General J-35
(6) Application of control J-39
(7) Release from lockout or tagout J-40
(8) Additional requirements J-41
Appendix A J-43

437-004-1105 Sanitation.

(1) General.

(a) Scope. This applies to permanent agricultural places of employment under conditions not covered by other standards such as OAR 437-004-1110, Field Sanitation and OAR 437-004-9990, Worker Protection Standard.

(b) Definitions applicable to this section.

Non-water carriage toilet facility is a toilet facility not connected to a sewer.

Number of employees is, unless otherwise stated, the maximum number of employees present at any one time on a regular shift.

Potable water is water meeting the bacteriological and chemical quality requirements in the OAR Chapter 333, Division 61, Public Water Systems, of the Oregon State Health Division.

Sanitary means free from agents harmful to health.

Toilet facility is a fixture in a toilet room for defecation, urination, or both.

Toilet room is a room with toilet facilities in or on any place of employment.

Toxic material is a material in concentration or amount that exceeds the applicable limit established by a standard, or, lacking an applicable standard, is so toxic as to be a recognized hazard that is causing or is likely to cause death or serious physical harm.

Urinal is a toilet facility in a toilet room for the sole purpose of urination.

Water closet is a toilet in a toilet room for both defecation and urination and flushed with water.

Wet process is any process or operation that normally results in employee walking or working surfaces becoming wet.

(c) Housekeeping.

(A) Keep all work areas as clean as the work allows.

(B) Work area floors must be kept as dry as conditions allow. Where there are wet processes, there must be drainage or false floors, platforms, mats, or other dry standing places, where practicable. Otherwise, provide waterproof shoes or boots.

(d) Waste disposal.

(A) Any container for solid or liquid waste or refuse that could rot or decompose must not leak. It must be cleanable, sanitary and have a solid tight-fitting cover unless it can be kept sanitary without one.

(B) Remove sweepings, solid or liquid wastes, refuse, and garbage to avoid creating a health hazard and often enough to keep the work area sanitary.

(2) Disposal of waste materials.

(a) Do not allow scrap, waste material or debris to accumulate in work areas.

(b) Remove flammable waste, such as oily rags, or keep it in containers designed or suitable for it.

(c) Where the use of machines or equipment creates hazardous waste materials, they must have suitable collecting or removal systems. If the refuse is unsuitable for removal that way, find a safe method of temporary storage and regular removal.

(3) Water supply.

(a) Potable water.

(A) Every work area must have potable water for drinking and washing.

(B) Portable drinking water dispensers must be kept sanitary. They must be capable of being closed and have a tap.

(C) Do not use open containers such as barrels, pails, or tanks for drinking water.

(D) Do not use common drinking cups and other common utensils.

(b) Non-potable water.

(A) Outlets for non-potable water must have markings that clearly state that the water is unsafe and is not for drinking, washing, or use with or on food.

(B) Non-potable water systems or systems carrying any other non-potable substance must prevent backflow or back siphonage into a potable water system.

(C) Do not use non-potable water for washing any part of the body, cooking or eating utensils, or clothing. Clean work areas, other than food processing and preparation areas and personal service rooms, with non-potable water only if it has no chemicals, fecal coliform, or other substances that could create unsanitary conditions or be harmful to employees.

NOTE: Water supply systems design and construction standards are in the Oregon Health Division rules, OAR Chapter 333, Division 61, Public Water Systems.

(4) Toilet facilities.

(a) General.

(A) Except as otherwise stated in this paragraph, there must be toilet facilities that comply with Table 1, in toilet rooms separate for each sex. Base the number of facilities for each sex on the number of employees of that sex. You do not need separate rooms for each sex if the toilet rooms are for one person at a time, can be locked from the inside, and have at least one water closet. Where single-occupancy rooms have more than one toilet facility, count only one facility in each toilet room when using Table 1.

Table 1

	Minimum number of water closets [1]
1 to 15	1
16 to 35	2
36 to 55	3
56 to 80	4
81 to 110	5
111 to 150	6
Over 150	(2)

[1] If women will not be using the toilet facilities, there may be urinals instead of water closets. The number of water closets must not be less than 2/3 of the minimum specified.

[2] One additional fixture for each additional 40 employees.

(B) The requirements of **(4)(a)(A)** above do not apply to mobile crews or to normally unattended work locations if employees have transportation immediately available to nearby toilet facilities that meet the requirements of this subparagraph.

(C) The sewage disposal method must not endanger the health of employees.

(b) Construction of toilet rooms. Each water closet must be in a separate compartment with a door and walls or partitions between fixtures high enough to assure privacy.

(c) Toilet facilities. Toilet facilities at permanent work sites must be reasonably accessible.

(5) Washing facilities. Work areas must have adequate facilities or supplies for cleaning hands.

(6) Change rooms. When a standard requires employees to wear protective clothing because of the possibility of contamination with toxic materials, you must provide change rooms with storage facilities for street clothes and separate storage facilities for the protective clothing. This does not apply to outdoor work.

(7) Consumption of food and beverages on the premises. This applies only where employees are permitted to eat on the premises.

(a) Do not allow workers to eat in a toilet room or in any area exposed to a toxic material.

(b) Provide receptacles made of smooth, corrosion resistant, easily cleanable, or disposable materials for the disposal of waste food. Do not allow them to become over filled. Empty them daily unless unused and keep them clean. They must have a solid tight-fitting cover unless they can be kept clean without a cover.

(c) Do not store food or beverages in toilet rooms or in areas exposed to a toxic material, medicines or live virus.

(8) Vermin control. Every enclosed workplace must be built and maintained, as much as practicable, to prevent rodents, insects, and other vermin from entering or living in it.

Stat. Auth.: ORS 654.025(2) and 656.726(4).
Stats. Implemented: ORS 654.001 through 654.295.
Hist: OR-OSHA Admin. Order 4-1998, f/8/28/98, ef. 10/1/98.

437-004-1110 Field Sanitation for Hand Labor Work.

(1) Scope. This applies to any agricultural establishment where employees do hand-labor operations in the field.

(2) Exceptions. These rules do not apply to:

(a) Logging operations;

(b) The care or feeding of livestock;

(c) Hand-labor operations in permanent structures (e.g., canning facilities or packing houses); or

(d) Machine operators working entirely separate from hand-labor operations.

(3) Definitions.

Agricultural employer – See universal definition in 4/B, OAR 437-004-0100.

Agricultural establishment – See universal definition in 4/B, OAR 437-004-0100.

Hand labor operation – means agricultural activities or agricultural operations performed by hand or with hand tools, including:

(A) Hand-cultivation, hand-weeding, hand-planting, and hand-harvesting of vegetables, nuts, fruits, seedlings, or other crops (including mushrooms);

(B) Hand packing or sorting, whether done on the ground, on a moving machine, or in a temporary packing shed in the field; and

(C) Except for purposes of **OAR 437-004-1110(6)**, operation of vehicles or machinery, when such activity is in conjunction with other hand-labor operators.

Handwashing facility – means a facility providing either a basin, container, or outlet with an adequate supply of potable water, soap, and single-use towels.

Potable water – is water meeting the bacteriological and chemical quality requirements in the OAR Chapter 333, Division 61 Public Water Systems, of the Oregon State Health Division.

NOTE: OAR Chapter 333, Division 61 defines potable water as "Safe Drinking Water – water which has sufficiently low concentrations of microbiological, inorganic chemical, organic chemical, radiological, or physical substances so that individuals drinking such water at normal levels of consumption, will not be exposed to disease organisms or other substances that may produce harmful physiological effects."

Toilet facility – means a fixed or portable facility designed for adequate collection and containment of the products of both defecation and urination. Toilet facility includes biological, chemical, flush, and combustion toilets and sanitary privies.

(4) General requirements. Agricultural employers must provide and pay for everything required by this section for employees doing hand-labor operations in the field.

(5) Potable drinking water.

(a) Provide potable water that is available immediately to all employees.

(b) The water must be suitably cool and in sufficient amounts, taking into account the air temperature, humidity, and the nature of the work, to meet the needs of all employees.

(c) Dispense water in single-use drinking cups or by angle jet fountains. Do not use common drinking cups or dippers.

(6) Toilet and handwashing facilities.

(a) Provide one toilet facility and one handwashing facility for each 20 employees or fraction thereof.

(b) Toilet facilities must have adequate ventilation, appropriate screens, self-closing doors that close and latch from the inside and ensure privacy.

(c) Maintain privies and portable toilets as follows:

(A) Structures must be free of hazards, in good repair and be stable.

(B) Except for urinals, multiple units must have separate compartments with doors with inside latches to ensure privacy.

(C) Seats must have lids that raise to allow use as urinals, unless there are separate urinals.

(d) Privies and portable toilets built after the effective date of these rules must comply with the rules of the Department of Environmental Quality.

(e) Provide toilet facilities for each sex, where practicable. Distinctly mark them "women" and "men" in English and in the native language of employees expected to work in the fields or with easily understood pictures or symbols.

(f) The employer must ensure that for each toilet facility:

(A) There is enough toilet paper to meet the workers' needs during the shift; and

(B) There are toilet paper holders or dispensers for each seat.

(g) Locate toilet and handwashing facilities adjacent to each other and no more than a 5-minute or a 1/4-mile (1,320 feet) unobstructed walk from each hand laborer's place of work in the field.

(h) Where, due to terrain, it is not feasible to locate facilities as in **(g)** above, the facilities must be at the point of closest vehicular access.

(7) Maintenance.

(a) Potable drinking water and toilet and handwashing facilities must comply with appropriate public health sanitation practices.

(b) Drinking water containers must be made of materials that maintain water quality. Refill them daily or more often as necessary and keep them covered and clean.

(c) Toilet facilities must work and be clean and safe.

(d) Empty and recharge chemical toilets prior to the start of each season of operation and at least every 6 months thereafter during use or when the tank is three-quarters full, whichever occurs first.

(e) Where crops intended for human consumption are produced, toilets must not contaminate crops.

(f) Refill handwashing facilities with potable water as necessary to ensure an adequate supply and maintain them in a clean and sanitary condition.

(g) Disposal of wastes from facilities, including handwashing water and towels, must not cause unsanitary conditions or contamination of crops.

(8) Field sanitation notice. Employers that grow or harvest food crops for human consumption must post a notice describing the requirements of these rules and advising where workers may file complaints regarding field sanitation matters. It must be in the language of the majority of the workers.

(9) Reasonable use.

(a) The employer must notify each employee of the location of the sanitation facilities and water, and allow each employee reasonable opportunities during the workday to use them. The employer must inform each employee of the importance of good hygiene practices to minimize exposure to the hazards in the field from heat, communicable diseases, retention of urine and agrichemical residues, including, but not limited to the following:

(A) Using the water and facilities provided for drinking, handwashing, and elimination;

(B) Drinking water frequently, especially on hot days;

(C) Urinating as frequently as necessary;

(D) Washing hands both before and after using the toilet; and

(E) Washing hands before eating and smoking.

Stat. Auth.: ORS 654.025(2) and 656.726(4).
Stats. Implemented: ORS 654.001 through 654.295.
Hist: OR-OSHA Admin. Order 4-1998, f/8/28/98, ef. 10/1/98.
OR-OSHA Admin. Order 4-2011, f. 12/8/11, ef. 12/8/11.

437-004-1120 Agricultural Labor Housing and Related Facilities.

(1) Application.

(a) These rules apply to any place, or area of land, where there are living areas, manufactured or prefabricated homes or dwellings or other housing provided by a farmer, farm labor contractor, agricultural employer or other person in connection with the recruitment of workers on an agricultural establishment.

(b) These rules apply to any type of labor housing and related facilities together with the tract of land, established, or to be established, operated or maintained for housing workers with or without families whether or not rent is paid or collected.

(c) Manufactured dwellings and homes must comply with specifications for construction of sleeping places, unless they comply with ORS 446.155 to 446.185 and OAR 918-500-0020(2) that have the requirements and specifications for sanitation and safety design for manufactured dwellings.

(d) These rules apply to housing given to, rented, leased to or otherwise provided to employees for use while employed and provided or allowed either by the employer, a representative of the employer or a housing operator.

(e) These rules, unless otherwise stated, apply to all occupants of the labor housing and facilities.

(f) These rules apply to all labor housing sites owned, operated, or allowed to operate on property under the jurisdiction of any state or municipal authority.

(g) Violations relating to the occupants' personal housekeeping practices in facilities that are not common use will not result in citations to the employer.

(h) For the purposes of OAR 437-004-1120, labor contractors as defined in ORS 658.405 are employers.

(2) These rules do not apply to:

(a) hotels or motels that provide similar housing commercially to the public on the same terms as they do to workers.

(b) accommodations subject to licensing as manufactured dwelling parks, organizational camps, traveler's accommodations or recreation vehicle parks and open to the general public on the same terms.

(c) manufactured homes or dwellings being moved regularly from place to place because of the work when at parks or camps meant for parking mobile vehicles and open to the general public on the same terms.

(3) Charging occupants for required services. Operators may not charge for services required by this rule (OAR 437-004-1120). This prohibits pay-per-use toilets, pay-per-use bathing facilities or any other method of paying for individual service requirements.

(4) Definitions.

Clean means the absence of soil or dirt or removal of soil or dirt by washing, sweeping, clearing away, or any method appropriate to the material at hand.

Common use facilities are those for use by occupants of more than one housing unit or by occupants of dormitory-style housing.

Common use cooking and eating facility is a shared area for occupants to store, prepare, cook, and eat their own food.

Dining hall is an eating place with food furnished by and prepared under the direction of the operator for consumption, with or without charge, of the occupants.

Facility means a living area, drinking water installation, toilet installation, sewage disposal installation, food handling installation, or other installation required for compliance with the labor housing and related facility rules.

Garbage means food wastes, food packaging materials or any refuse that has been in contact with food stuffs.

Housing site is a place where there are living areas.

Livestock operation is any place, establishment or facility with pens or other enclosures in which livestock is kept for purposes including, but not limited to, feeding, milking, slaughter, watering, weighing, sorting, receiving, and shipping. Livestock operations include, among other things, dairy farms, corrals, slaughterhouses, feedlots, and stockyards. Operations where livestock can roam on a pasture over a distance are outside this definition.

Living area is any room, structure, shelter, tent, manufactured home or dwelling or prefabricated structure, vehicle or other place housing one or more persons.

Manufactured dwelling is a residential trailer, built before January 1, 1962, for movement on the highway, that has sleeping, cooking and plumbing facilities; or, a mobile home, constructed for movement on the highway, that has sleeping, cooking and plumbing facilities, built between January 1, 1962 and June 15, 1976 and meeting the requirements of Oregon mobile home law in effect at the time of construction.

Manufactured home is a structure built for movement on the highway that has sleeping, cooking and plumbing facilities and is used as a residence. Built on or after June 15, 1976 to comply with federal manufactured housing standards and regulations in effect at the time of construction. More information on these definitions is in ORS 446.003(26).

Operator means any person or company that operates labor housing and/or related facilities.

Potable water is water meeting the bacteriological and other requirements of the Public Health Division of the Oregon Department of Human Services.

Prefabricated structure means a building or subassembly which has been in whole or substantial part manufactured or assembled using closed construction at an off-site location to be wholly or partially assembled on-site; but does not include a manufactured home or dwelling. Prefabricated structures are manufactured in accordance with the Oregon state building code and rules adopted by the Building Codes Division of the Oregon Department of Consumer and Business Services in OAR 918-674.

Privy is the same as outhouse or pit toilet but is not the same as portable toilets.

Recyclable material means containers that are returnable for refund of a deposit or materials gathered as part of a recycling program.

Refuse includes waste materials such as paper, metal, discarded items, as well as debris, litter and trash.

Sanitary means free from agents that may be injurious to health.

Sewage means the water-carried human and animal wastes, including kitchen, bath, and laundry wastes from residences, buildings, industrial establishments, or other places, together with such ground-water infiltration, surface waters, or industrial wastes as may be present.

Toilet room is a room in or on the premises of any labor housing, with toilet facilities for use by employees and occupants of that housing.

(5) Housing registration requirements.

(a) ORS 658.705 requires the operator of Agricultural Labor Housing and Related Facilities to register such housing with Oregon OSHA as in (b) below, except the following:

(A) housing occupied solely by members of the same family,

(B) housing occupied by five or fewer unrelated persons, and

(C) housing on operations that do not produce or harvest farm crops (Oregon OSHA considers “production of crops” to mean production of farm crops for sale”).

(b) Each year, before occupancy, the operator or employer must register agricultural labor housing and related facilities with Oregon OSHA as set out below.

(A) The operator must contact Oregon OSHA at least 45 days before the first day of operation or occupancy of the housing and related facilities. Instructions and additional information will come later by mail.

(B) If the housing and related facilities were not registered in the previous year, the operator must call Oregon OSHA to request a consultation visit to the housing. Oregon OSHA will register housing and related facilities not previously registered only after a pre-occupancy consultation that finds the housing or facility to be substantially in compliance with all applicable safety and health rules.

(C) If there were significant changes in the circumstances of the housing or facilities since the last registration, Oregon OSHA may, at its discretion, refer the employer for a consultation prior to re-registering the housing and facilities.

(D) Once registered, the operator must display the registration certificate provided by Oregon OSHA in a place frequented by employees. The operator must also provide and display a translation of the certificate in the language or languages used to communicate with employees.

(c) The Director of the Department of Consumer and Business Services or designee may revoke a labor housing and related facilities registration if Oregon OSHA determines that any of the following apply:

(A) The application had any negligent or willful material misrepresentation, or false statement.

(B) The conditions under which the registration was accepted no longer exist or have changed.

(C) The housing and related facilities are not substantially in compliance with the applicable safety and health rules.

(d) When Oregon OSHA revokes the registration of agricultural labor housing and related facilities, operators or their agents have 30 days to file a written appeal. On receipt of such appeal, the Director of the Department of Consumer and Business Services will hold a contested case hearing on that appeal under ORS 183.413, et seq.

(e) Any group or individual may protest the proposed registration, continued registration or renewal of any labor housing and related facilities registration under the following conditions:

(A) The signed and dated protest must be submitted in writing and received by the Director before issuance of the registration or renewal.

(B) The protest must include the name, address and phone number of the individual or group filing it.

(C) The protest must clearly identify which housing and related facilities is the subject of the protest, including the exact physical location and name of the applicant.

(D) The protest must clearly state the facts and reasons for the protest. Such facts and reasons must be based on factors that are within the scope of ORS 654, ORS 658.705 through 658.850 and any relevant regulations.

(E) When the above provisions are met, such group or individual may participate in the contested case as a party or limited party under OAR 137-003-0005.

(6) Site requirements.

(a) The grounds of labor housing and related facilities must be substantially free from waste water, sewage, garbage, recyclable material, refuse or noxious plants such as poison oak and poison ivy.

(b) During housing occupancy, grass, weeds and brush must be cut back at least 30 feet from buildings.

(c) All housing site land must have adequate drainage. The site must not be subject to flooding when occupied.

(d) Adequately dispose of the waste water and food waste under outside water hydrants.

(e) The operator of labor housing is responsible for the maintenance and operation of the housing and its facilities.

(f) Store all toxic materials such as pesticides, fertilizers, paints and solvents in a safe place.

(g) Do not leave empty pesticide containers such as drums, bags, cans, or bottles in the housing area.

(h) Prevent or control the breeding of mosquitoes, flies, and rodents in the immediate housing area and within 200 feet of any labor housing and related facilities owned or under lawful control or supervision of the operator.

(i) Do not locate labor housing within 500 feet of livestock operations unless the employees in the housing are employed to tend or otherwise work with the animals.
NOTE: This is does not apply to animals owned by the housing occupants.

(j) Provide electricity to all housing units and related facilities. Subdivision 4/S, Electricity applies to ALH.

(k) Extension cords or plug strips must have circuit breaker or fuse protection either as part of the set or part of the building wiring.

(l) Facilities built or remodeled before December 15, 1989, must have a ceiling or wall-type electric light fixture in working order and at least one wall-type electrical outlet in every living area. Facilities built or remodeled after that date must comply with the code in effect at the time of construction or remodeling.

(m) Provide a ceiling or wall-type electric light in toilet rooms, lavatories, shower or bathing rooms, laundry rooms, hallways, stairways, the common eating area or other hazardous dark areas.

(n) Light privies either directly or indirectly from an outside light source.

(o) Provide enough light in corridors and walkways to allow safe travel at night.

(p) Each housing site must have its street numbers displayed to be easily visible to responding emergency vehicles on public highways or roads.

(q) The lowest point of wooden floor structures must be at least 12 inches above ground.

(7) Water supply.

(a) All domestic water furnished at labor housing and related facilities must conform to the standards of the Public Health Division of the Oregon Department of Human Services.

(A) The site water system must supply at least 15 psi at the outlet end of all water lines regardless of the number of outlets in use.

(b) Have a bacteriological analysis done on the water before occupancy and as often as needed to assure a potable water supply, except when the water comes from a community water system.

(c) Provide enough potable water in the labor housing area for drinking, hand washing, bathing and domestic use. An ample supply is at least 35 gallons of water per day per occupant.

(d) Arrange, construct and if necessary, periodically disinfect the water storage and distribution facilities to satisfactorily protect the water from contamination. Install all new plumbing in labor housing and related facilities to comply with the Oregon state building code.

(e) When potable water is not available in each dwelling unit, there must be a potable water source within 100 feet of each unit and there must be a working, clean drinking fountain for each 100 occupants or fraction thereof.

(f) Post as, "Unsafe for drinking," non-potable water that is accessible to occupants. The posting must be in the language of the camp occupants or with a universal symbol.

(g) Portable water containers with spigots and tight fitting lids are acceptable for providing and storing drinking water in the housing.

(A) These containers must be made of impervious non-toxic materials that protect the water from contamination.

(B) Wash and sanitize them at least every 7 days.

(h) Do not use containers such as barrels, pails or tanks that require dipping or pouring to get the water.

(i) Do not use cups, dippers or other utensils for common drinking purposes.

(j) Do not allow cross connection between a system furnishing water for drinking purposes and a non-potable supply.

(8) Bathing, hand washing, laundry, and toilet facilities – General.

(a) Provide an adequate supply of hot and cold water under pressure for all common use bathing, hand washing, and laundry facilities at all labor housing and related facilities.

(b) In installations with bathing, laundry facilities, or flush toilets, the floor and walls must be of readily cleanable finish and impervious to moisture.

(c) All common use bathing, hand washing, and laundry facilities must be clean, sanitary and operating properly.

(d) Buildings for common use bathing, hand washing, laundry, and toilet facilities must have heating capable of keeping the facility at 68 degrees or more during use.

(9) Bathing facilities.

(a) Provide drains in all showers to remove waste water. Slope floors so they drain. Do not use slippery materials for flooring.

(b) Provide at least one shower head with hot and cold water under pressure for every 10 occupants or fraction thereof.

(A) Unisex shower rooms are acceptable in the same ratios. They must have working locks and provide privacy.

(c) Separate common use bathing facilities used for both sexes in the same building by a solid, non-absorbent wall extending from the floor to the ceiling.

(d) Mark separate sex bathing facilities, if provided, with “women” and “men” in English and in the native language of employees expected to occupy the housing or with easily understood pictures or symbols.

(10) Hand washing facilities.

(a) Provide at least one hand washing sink or basin with hot and cold water under pressure for every 6 occupants or fraction thereof. Each 24 linear inches of “trough” type sink with individual faucets counts as one basin. When each living unit does not have hand washing facilities, locate common use facilities either close to the toilet facilities or close to the sleeping places.

(b) In common use facilities, do not use a single common towel. If you provide paper towels, there must be a container for their disposal.

(11) Laundry facilities.

(a) Provide laundry trays, tubs, or machines with plumbed hot and cold water in the combined ratio of 1 for each 30 occupants or each part of 30.

(b) Provide clothes lines or drying facilities to serve the needs of the occupants.

(c) Laundry rooms must have drains to remove waste water.

(d) Each common use laundry room must have a slop sink.

(12) Toilet facilities.

(a) Locate toilet facilities in labor housing and related facilities within 200 feet from the living area that they serve.

(b) Locate toilets, chemical toilets, or urinals in rooms built for that purpose.

(c) Maintain a usable, unobstructed path or walkway free of weeds, debris, holes or standing water from each living area to the common use toilet facilities.

(d) Provide at least one toilet for every 15 occupants or fraction thereof for each gender in the labor housing. Toilets must assure privacy.

(A) If urinals are in the toilet facility and where three or more toilets are required for men, one urinal substitutes for one toilet (24 inches of trough-type urinal equals one urinal), to a maximum of one-third of the total required toilets.

(B) Existing urinals must be non-absorbent, non-corrosive materials that have a smooth and cleanable finish. Urinals installed after the effective date of this standard must meet Oregon state building code.

(C) If there are no common use toilet facilities, calculate the required ratio without regard to gender.

(e) Clean common use toilet facilities daily or more often when needed to maintain sanitation.

(f) Mark separate sex toilet facilities, when provided, with “women” and “men” in English and in the native language of employees expected to occupy the housing or with easily understood pictures or symbols.

(g) Ventilate all labor housing toilet rooms according to the Oregon state building code.

(h) Separate common use toilet facilities used for both sexes in the same building by a solid, non-absorbent wall extending from the floor to the ceiling.

(i) Install privacy partitions between each individual toilet or toilet seat in multiple toilet facilities. The partitions may be less than the height of the room walls.

(A) The top of the partition must be not less than 6 feet from the floor and the bottom of the partition not more than 1-foot from the floor. The width of the partition must extend at least 1 1/2 feet beyond the front of the toilet seat.

(B) Provide a door or curtain so the toilet compartment is private.

(j) Provide common use toilet facilities with toilet paper and holders or dispensers. Also provide disposal containers with lids.

(k) Do not allow obstruction of the path or access to a toilet room. If access is through another room, that room must not be lockable.

(13) Portable toilets, chemical toilets and privies.

(a) The location and construction of privies must conform to Oregon Department of Environmental Quality standards.

(b) Privies must be at least 100 feet from any living area or any facility where food is prepared or served.

(c) Portable toilets and privies must have adequate lighting.

(d) When in use, service portable and chemical toilets at least weekly or often enough to keep them from becoming a health hazard. Clean portable toilets, chemical toilets and privies at least daily.

(14) Sewage disposal and plumbing.

(a) Connect the sewer lines from the labor housing and related facilities to a community sewer system, a septic tank with subsurface disposal of the effluent, pit type privies or other sanitary means conforming to Department of Environmental Quality standards.

(b) Install all plumbing in labor housing and related facilities to comply with Department of Environmental Quality standards and the Oregon state building code.

(15) Garbage and refuse disposal outside of buildings.

NOTE: Recyclable material is not garbage or refuse referred to in this section (15).

(a) Keep refuse and garbage containers clean and in good repair.

(b) Provide at least one 30-gallon or larger container per 15 occupants. Containers must be inside the housing site area and accessible to all occupants.

(c) Empty garbage bins and dumpsters at least weekly during use, but always before they become a health hazard or full enough to interfere with full closing of the lid.

(d) Empty common use cans and portable containers into a bin or dumpster, when full or twice weekly whichever is more frequent. Do not allow garbage on the ground.

(e) Keep all refuse and garbage containers covered and the garbage storage area clean to control flies and rodents.

(f) Do not burn any food, garbage or wet refuse.

(g) Dispose of garbage and refuse according to Department of Environmental Quality standards that govern the disposal of garbage, refuse and other solid wastes.

(16) Living areas.

(a) Keep all living areas, safe and in good repair structurally and stable on their foundations. They must provide shelter for the occupants against the elements and protect the occupants from ground and surface water as well as rodents and insects.

(b) The walls and roof must be tight and solid. Floors must be rigid and durable, with a smooth and cleanable finish in good repair.

(c) For living areas without a working permanent heating system or heaters, the ALH operator must supply portable heaters at no cost to the occupant. These heaters must be capable of keeping the temperature in the living area at a minimum of 68 degrees. Heaters must meet these requirements:

(A) Operate by electricity only.

(B) Have working safety devices installed by the manufacturer for the particular type heater.

(C) Be in good working order with no defects or alterations that make them unsafe.

(d) Permanently installed solid fuel or gas fired heaters must meet the following:

(A) Install and vent any stoves or other sources of heat that use combustible fuel to prevent fire hazards and dangerous concentration of gases.

(i) Solid or liquid fuel heaters or stoves installed on or before December 15, 1989, must sit on a concrete slab, insulated metal sheet or other fire resistant material when used in a room with wood or other combustible flooring. Extend it at least 18 inches beyond the perimeter of the base of the stove.

(ii) Solid or liquid fuel heaters or stoves must meet the manufacturer's specifications and the Oregon state building code in effect at the time of installation.

(B) Install fire resistant material on any wall or ceiling within 18 inches of a solid or liquid fuel stove or a stove pipe. Provide a vented metal collar around the stovepipe, or vent passing through a wall, ceiling, floor or roof or combustible material.

(C) Heating systems with automatic controls must cut off the fuel supply on failure or interruption of the flame or ignition, or when they exceed a pre-determined safe temperature or pressure.

(D) All gas appliances and gas piping must comply with the Oregon state building code in effect at time of installation and the manufacturer's instructions.

(E) Do not locate stoves so they block escape from a sleeping place.

(e) Provide screens of at least 16 mesh on the doors and windows of the living area. All screen doors must be tight-fitting, in good repair, and self-closing.

(f) Provide beds, bunks or cots for each occupant and suitable storage facilities, such as wall cabinets or shelves, for each occupant or family unit.

(A) The camp operator must provide a mattress or pad for each bed or bunk.

(i) If you provide foam pads, they must be thicker than 2 inches.

(ii) Do not provide uncovered foam pads.

(iii) Mattresses or pads must not sit on the floor.

(iv) The sleeping surface must be at least 12 inches above the floor.

(g) Mattresses or pads furnished by the camp operator must be clean, in good repair, and free from insects and parasites.

(A) Fumigate mattresses or pads, used uncovered, or treat with an effective insecticide before each season's occupancy. If you provide covers, clean them before each season's occupancy.

(B) Store mattresses or pads in a clean, dry place.

(h) Space the beds, bunks or cots so that there is enough room to allow for rapid and safe exiting during an emergency.

NOTE: Do not count children 2 years old and younger when calculating square footage requirements in paragraphs (i), (j), (k), and (l).

(i) In living areas built after August 1, 1975, where workers cook, live, and sleep, provide at least 100 square feet per occupant.

(j) In living areas built before August 1, 1975, where workers cook, live and sleep, provide at least 60 square feet per occupant.

(k) Each sleeping room without double bunk beds must have at least 50 square feet of floor space per employee. Where there are double bunk beds, provide 40 square feet per occupant. Do not use triple bunks.

(l) Beginning on January 1, 2018 all agricultural labor housing, where workers cook, live and sleep in the same area, must provide 100 square feet per occupant.

(m) For units built after April 3, 1980 at least one-half the required floor space in each living area must have a minimum ceiling height of 7 feet. Floor space with a ceiling height less than 5 feet does not count toward the minimum required floor space.

(n) Beginning on January 1, 2018 only areas with a 7 foot ceiling height will count toward the required square footage of any living or sleeping area. Housing built or remodeled between January 26, 2009 and January 1, 2018 must have minimum 7-foot high ceilings for the space to count toward any required square footage.

(o) Provide separate private sleeping areas for unrelated persons of each sex and for each family unit.

(p) Provide windows or skylights with a total area equal to at least 10 percent of the required floor area. At least one-half (nominal) the total required window or skylight area must be openable to the outside. Adequate mechanical ventilation may substitute for openable window space. Not more than one-half the required space can be met with skylights. Openable, screened windows in doors count toward this requirement.

(q) Before occupancy clean all living areas and eliminate any rodents, insects, and animal parasites.

(17) Fire protection.

(a) All fires must be in equipment designed for that use. Do not allow open fires within 25 feet of structures.

(b) Each season, at the time of initial occupancy, each living area must have a working approved smoke detector.

NOTE: The camp operator is not responsible for daily maintenance of the detector or the actions of occupants that defeat its function.

(c) Provide fire extinguishing equipment in a readily accessible place, not more than 50 feet from each housing unit. The equipment must provide protection equal to a 2A:10BC rated extinguisher.

NOTE: Hoses are acceptable substitutes for extinguishers only if the water supply is constant and reliable. Hoses must be immediately available for firefighting use.

(d) All living areas with more than one room, built before December 15, 1989, with one door, must have, in addition to a door, a window in each sleeping room that can be an exit in case of fire.

(A) This window must have an openable space at least 24 inches by 24 inches, nominal.

(B) The lowest portion of the opening must be less than 48 inches above the floor.

(C) This window must open directly to the outdoors and be readily openable by the occupants from inside without breaking the glass.

(D) Label the escape window as an emergency exit.

(e) Living areas built on or after December 15, 1989, must meet the requirements for emergency exits in applicable rules of the Building Codes Division of the Oregon Department of Consumer and Business Services, including the following:

(A) Required emergency exit windows in sleeping rooms must have a clear net opening of at least 5.7 square feet, minimum vertical opening of 22 inches and minimum horizontal opening of 20 inches.

NOTE: Construct and maintain all living areas in labor housing and related facilities to comply with other applicable local and state laws and regulations in effect at the time of construction or remodel.

(f) A second story must have at least two exits when its occupant load is 10 or more. Comply with the Oregon state building code.

(g) Occupants on floors above the second story and in basements must have access to at least two separate exits from the floor or basement as required by the Oregon state building code.

(18) Common use cooking and eating facilities and equipment.

(a) When provided, common use cooking or food preparation facilities or equipment must have the following:

(A) A gas or electric refrigerator, capable of keeping food at or below 41 degrees F.

(B) A minimum equivalent of two cooking burners for every 10 persons or part thereof, or 2 families, whichever requires the most burners.

(i) If a gas or electric hotplate or wood stove is within 18 inches of a wall, that wall must be made of or finished with smooth cleanable, nonabsorbent, grease-resistant and fire-resistant material.

NOTE: Labeled and listed appliances are exempt from the 18-inch requirement when installed according to their listing.

(C) No liquid petroleum gas (LPG like propane) tanks in use inside any occupied building. Outside tanks must connect to appliances with lines approved for that purpose.

(D) Food storage shelves, food preparation areas, food contact surfaces and floors in food preparation and serving areas must be made of or finished with smooth, non-absorbent, cleanable material; and

(E) A table and chairs or equivalent seating and eating arrangements to accommodate the number of occupants living in the sleeping place.

(b) Refrigerators and stoves or hot plates must always be in working condition.

(c) Clean the facilities and equipment before each occupancy.

(d) Common use kitchen and dining areas must be separate from all sleeping quarters. There can be no direct opening between kitchen or dining areas and any living or sleeping area.

(e) If the operator becomes aware of or has reason to suspect that anybody preparing, cooking or serving food has a communicable disease as listed in paragraph (22), the operator must bar them from the cooking facility until the disease is no longer communicable.

(f) Buildings must have heating capable of keeping the facility at 68 degrees or more during use.

(g) Facilities must be in buildings or shelters. Doors, windows and openings, if any, must have screens of 16 mesh or smaller.

(19) Dining halls and equipment.

(a) When provided, dining halls or equipment must have the following:

(A) A gas or electric refrigerator, capable of keeping food at or below 41 degrees F.

(B) A minimum equivalent of two cooking burners for every 10 persons or part thereof, 2 families, whichever requires the most burners.

(i) If a gas or electric hotplate or wood stove is within 18 inches of a wall, that wall must be made of or finished with smooth cleanable, nonabsorbent, grease-resistant and fire resistant material.

NOTE: Labeled and listed appliances are exempt from the 18-inch requirement when installed according to their listing.

(C) No liquid petroleum gas (LPG like propane) tanks in use inside any occupied building. Outside tanks must connect to appliances with lines approved for that purpose.

(D) Food storage shelves, food preparation areas, food contact surfaces and floors in food preparation and serving areas must be made of or finished with smooth, non-absorbent, cleanable material; and

(E) A table and chairs or equivalent seating and eating arrangements to accommodate the number of occupants living in the sleeping place.

(b) Refrigerators and stoves or hot plates must always be in working condition.

(c) Clean the facilities and equipment before each occupancy.

(d) Common use kitchen and dining areas must be separate from all sleeping quarters. There can be no direct opening between kitchen or dining areas and any living or sleeping area.

(e) If the operator becomes aware of or has reason to suspect that anybody preparing, cooking or serving food has a communicable disease as listed in paragraph (22), the operator must bar them from the cooking facility until the disease is no longer communicable.

(f) Buildings must have heating capable of keeping the facility at 68 degrees or more during use.

(g) The facility must comply with the 2005 edition of the FDA Food Code. NOTE: Follow Division 4, Agriculture when it differs from the FDA Food Code. The code is available at: http://www.cfsan.fda.gov/~dms/foodcode.html or contact the Oregon OSHA Resource Center at 800-922-2689 or in Salem 503-378-3272.

(h) Facilities must be in buildings or shelters. Doors, windows and openings, if any, must have screens of 16 mesh or smaller.

(20) Single unit cooking facilities.

(a) When provided, single unit cooking, eating and dining facilities or equipment must have the following:

(A) A gas or electric refrigerator, capable of keeping food at or below 41 degrees F.

(B) A minimum equivalent of two burners for cooking for every 10 persons or part thereof, or 2 families, whichever requires the most burners.

(i) If a gas or electric hotplate or wood stove is within 18 inches of a wall, that wall must be made of or finished with smooth cleanable, nonabsorbent, grease-resistant and fire resistant material.

NOTE: Labeled and listed appliances are exempt from the 18-inch requirement when installed according to their listing.

(C) No liquid petroleum gas (LPG like propane) tanks in use inside. Outside tanks must connect to appliances with lines approved for that purpose.

(D) Food storage shelves, food preparation areas, food contact surfaces and floors in food preparation and serving areas made of or finished with smooth, non-absorbent, cleanable material.

(E) A table and chairs or equivalent seating and eating arrangements to accommodate the number of occupants living in the sleeping place.

(F) A refrigerator and stove or hot plate in working condition.

(b) Clean the facilities before each occupancy.

(21) First aid. OAR 437-004-1305, Medical and First Aid, applies to all labor housing and related facilities. This rule includes requirements for first aid supplies, an emergency medical plan and a plan of communication.

NOTE: Division **4/K** requires all employees know about the first aid requirements and emergency medical plans. If employees' native language is other than English, this must be taken into account in meeting this requirement.

(22) Disease Reporting. The camp operator must comply with OAR 333-018-0000, Who Must Report and OAR 333-018-0015, What To Report And When:

333-018-0000 Who Must Report

(1) Each Health Care Provider knowing of or attending a case or suspected case of any of the diseases, infections, or conditions listed in OAR 333-018-0015 shall report such cases as specified. Where no Health Care Provider is in attendance, *any individual knowing of such a case* shall report in a similar manner.

333-018-0015 What to Report and When

(4) Reportable diseases, infections, microorganisms, and conditions, and the time frames within which they must be reported are as follows:

(a) Immediately, day or night: Bacillus anthracis (anthrax); Clostridium botulinum (botulism); Corynebacterium diphtheriae (diphtheria); Severe Acute Respiratory Syndrome (SARS) and infection by SARS-coronavirus; Yersinia pestis (plague); intoxication caused by marine microorganisms or their byproducts (for example, paralytic shellfish poisoning, domoic acid intoxication, ciguatera, scombroid); any known or suspected common-source Outbreaks; any Uncommon Illness of Potential Public Health Significance.

(b) Within 24 hours (including weekends and holidays): Haemophilus influenzae (any invasive disease; for laboratories, any isolation or identification from a normally sterile site); measles (rubeola); Neisseria meningitidis (any invasive disease; for laboratories, any isolation or identification from a normally sterile site); Pesticide Poisoning; poliomyelitis; rabies (human or animal); rubella; Vibrio (all species).

(c) Within one Local Public Health Authority working day: Bordetella pertussis (pertussis); Borrelia (relapsing fever, Lyme disease); Brucella (brucellosis); Campylobacter (campylobacteriosis); Chlamydophila (Chlamydia) psittaci (psittacosis); Chlamydia trachomatis (chlamydiosis; lymphogranuloma venereum); Clostridium tetani (tetanus); Coxiella burnetii (Q fever); Creutzfeldt-Jakob disease and other transmissible spongiform encephalopathies; Cryptosporidium (cryptosporidiosis); Cyclospora cayetanensis (cyclosporosis); Escherichia coli (Shiga-toxigenic, including E. coli O157 and other serogroups); Francisella tularensis (tularemia); Giardia (giardiasis); Haemophilus ducreyi (chancroid); hantavirus; hepatitis A; hepatitis B (acute or chronic infection); hepatitis C; hepatitis D (delta); HIV infection (does not apply to anonymous testing) and AIDS; Legionella (legionellosis); Leptospira (leptospirosis); Listeria monocytogenes (listeriosis); mumps; Mycobacterium tuberculosis and M. bovis (tuberculosis); Neisseria gonorrhoeae (gonococcal infections); pelvic inflammatory disease (acute, non-gonococcal); Plasmodium (malaria); Rickettsia (all species: Rocky Mountain spotted fever, typhus, others); Salmonella (salmonellosis, including typhoid); Shigella (shigellosis); Taenia solium (including cysticercosis and undifferentiated Taenia infections); Treponema pallidum (syphilis); Trichinella (trichinosis); Yersinia (other than pestis); any infection that is typically arthropod vector-borne (for example: Western equine encephalitis, Eastern equine encephalitis, St. Louis encephalitis, dengue, West Nile fever, yellow fever, California encephalitis, ehrlichiosis, babesiosis, Kyasanur Forest disease, Colorado tick fever, etc.); human bites by any other mammal; CD4 cell count < 200/_l (mm3) or CD4 proportion of total lymphocytes < 14%; hemolytic uremic syndrome.

(d) Within 7 days: Suspected Lead Poisoning (for laboratories; this includes all blood lead tests performed on persons with suspected lead poisoning).

(23) Access to ORS and OAR. Those wishing access to any of the Oregon Revised Statutes (ORS) or Oregon Administrative Rules (OAR) referenced here, may contact the Oregon OSHA Resource Center in Salem or the nearest Oregon OSHA Field Office.

(24) Closure and alternative housing.

(a) The operator of agricultural labor housing must provide replacement lodging without charge to the occupants if a government agency with the authority to enforce building, health or safety standards declares the housing or facilities to be uninhabitable and orders them vacated.

(b) The operator must provide replacement lodging for 7 consecutive days from the time the housing was closed or until the closing agency allows the original housing to reopen, whichever is shorter.

(c) Replacement lodging must meet or exceed the health and safety standards of Oregon OSHA. Oregon OSHA must approve the location of the replacement housing before employees are sent to it.

(d) Operators must arrange for replacement lodging not later than the end of the day the original housing closes or another date designated by the closing agency.

(e) Post the address of the replacement housing:

(A) Not later than the end of the day the original housing closes.

(B) In a place convenient to affected workers.

(C) In all languages spoken by the occupants.

(f) The posting in (e) above must state that the replacement housing is free to occupants of the closed housing.

(g) The operator must give Oregon OSHA a list of names of the occupants and the location of the replacement housing, for each.

(h) When the cause of the closure is beyond the control of the agricultural labor housing operator, sections (a), (b), (c), (d), (e) and (g) above do not apply. To determine whether the cause of closure was beyond the control of the operator, Oregon OSHA will consider these circumstances, including but not limited to:

(A) Whether the cause of the closure is a natural disaster;

(B) Whether the circumstances leading to the closure were known or should have been known to the operator;

(C) Whether operator diligence could have avoided the circumstances leading to the closure.

(i) Agricultural labor housing occupants entitled to temporary replacement housing under this rule must accept or reject that housing when the original housing closes. These rules do not obligate operators to reimburse displaced occupants for housing they obtain without the operator's knowledge or consent.

(A) The operator is responsible for replacement lodging only for as many people as occupied the original closed housing. When an occupant rejects the replacement housing, the operator has no obligation to reimburse that occupant for other replacement housing.

(j) Oregon OSHA may issue a citation and assess a monetary penalty for violation of these rules as in ORS 654.071 and 654.086.

Stat. Auth.: ORS 654.025(2) and 656.726(4).
Stats. Implemented: ORS 654.001 through 654.295.
Hist: OR-OSHA Admin. Order 4-1998, f. 8/28/98, ef. 10/1/98.
OR-OSHA Admin. Order 5-2000, f. 5/18/00, ef. 6/1/00.
OR-OSHA Admin. Order 4-2008, f. 3/24/08, ef. 5/1/08.
OR-OSHA Admin. Order 1-2009, f. 1/26/09, ef. 1/26/09.

437-004-1140 Lighting.

(1) General lighting.

(a) Provide adequate general and local lighting in rooms, buildings and work areas.

(b) Methods for determining the adequacy and effectiveness of lighting include:

(A) Measure the quantity of light against requirements in the American National Standard ANSI A11.1-1965, "American Standard Practice for Industrial Lighting."

(B) The quality of light as to freedom from glare and correct direction, diffusion and distribution.

Stat. Auth.: ORS 654.025(2) and 656.726(4).
Stats. Implemented: ORS 654.001 through 654.295.
Hist: OR-OSHA Admin. Order 4-1998, f/8/28/98, ef. 10/1/98.

437-004-1150 Safety Colors for Marking Physical Hazards.

(1) Color identification.

(a) Red. Use red as the basic color to identify:

(A) Danger. Safety cans or other portable containers of flammable liquids must be red with highly contrasting markings. Provide red lights at barricades and at temporary obstructions. The main or background color of danger signs must be red.

(B) Stop. Emergency stop bars on hazardous machines must be red. Use red for emergency stop buttons or emergency electrical switches with contrasting letters or other markings.

(b) Yellow. Yellow is the basic color to signal caution and to mark physical hazards such as: Striking against, stumbling, falling, tripping, and "caught between."

Stat. Auth.: ORS 654.025(2) and 656.726(4).
Stats. Implemented: ORS 654.001 through 654.295.
Hist: OR-OSHA Admin. Order 4-1998, f/8/28/98, ef. 10/1/98.

437-004-1180 Accident Prevention Signs.

(1) Scope. This section applies to the design, application and use of signs or symbols (as included in paragraphs **(3)** through **(5)** below) to warn of specific hazards. This does not apply to bulletin boards or safety posters.

(2) Definitions.

Sign – A surface marked to warn people of hazards, or to give safety instructions. Excluded are news releases, safety posters and bulletins.

(3) Classification of signs by use.

(a) Danger signs.

(A) Use signs of uniform design to warn of specific dangers and radiation hazards.

(B) Instruct all employees that danger signs warn of immediate danger and that special precautions are necessary.

(b) Caution signs.

(A) Use caution signs only to warn of hazards or to caution against unsafe practices.

(B) Instruct all employees that caution signs warn of a hazard against which they should take precautions.

(c) Safety instruction signs. Use safety instruction signs for general instructions and suggestions about safety.

(4) Sign design.

(a) Design features. Use signs with rounded or blunt corners and no sharp edges, burrs, splinters or other sharp projections. Place the ends or heads of bolts or other fastening devices so that they are not hazardous.

(b) Danger signs. The color of the background must be red.

(c) Caution signs. The color of the background must be yellow and the panel, black with yellow letters. Use black letters against the yellow background.

(d) Safety instruction signs. Use white for the background and make the panel green with white letters. Any letters used against the white background must be black.

(e) Slow-moving vehicle emblem. This emblem (see Figure 7) has a fluorescent yellow-orange triangle with a dark red reflective border. The reflective border defines the shape of the fluorescent color in daylight and creates a hollow red triangle in the path of motor vehicle headlights at night.

(A) Use this emblem only on vehicles that by design move at 25 mph or less on public roads. Do not use it as a clearance marker for wide machinery to replace required lighting or marking of slow-moving vehicles. The material, location, mounting, etc., of the emblem must conform to the American Society of Agricultural Engineers Emblem for Identifying Slow-Moving Vehicles, ASAE R276, 1967, or ASAE S276.2 (ANSI B114.1-1971).

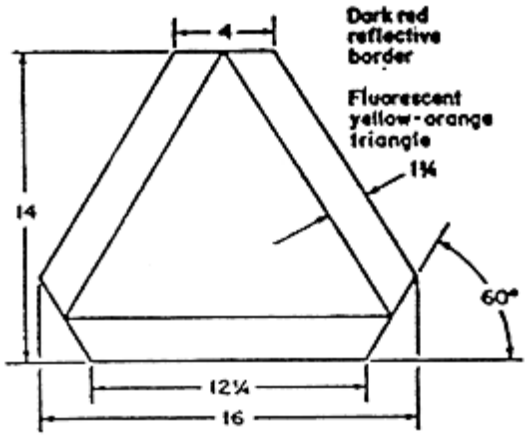

Figure 7. Slow-Moving Vehicle Emblem

(5) Sign wordings.

(a) Nature of wording. Use wording on signs that is easily understandable.

(b) Biological hazard signs. Use the biological hazard warning sign to warn of the actual or potential presence of a biohazard. Use it to mark equipment, containers, rooms, materials, experimental animals or combinations of them, that contain or are contaminated with viable hazardous agents. For this subparagraph the term "biological hazard," or "biohazard," means only those infectious agents presenting a risk or potential risk to the well-being of humans.

Note: All dimensions are in inches.

Stat. Auth.: ORS 654.025(2) and 656.726(4).
Stats. Implemented: ORS 654.001 through 654.295.
Hist: OR-OSHA Admin. Order 4-1998, f/8/28/98, ef. 10/1/98.

437-004-1250 Confined and Hazardous Spaces.

(1) Definitions.

Competent person is somebody who can identify existing and predictable hazards and take measures to eliminate them.

Confined space is a space that:

is large enough and so configured that an employee can bodily enter and work; and

has limited or restricted entry or exit (for example, tanks, vessels, silos, storage bins, hoppers, vaults, and pits may have limited entry); and

is not designed for continuous employee occupancy.

Engulfment is the covering of a person by a liquid or finely divided (flowable) solid substance that when inhaled causes death or that can exert enough force on the body to cause death by strangulation, constriction or crushing.

Entry is passing through an opening into a hazardous or confined space. Entry includes work in the space and occurs when any part of the entrant's body breaks the plane of an opening into the space in a way that creates a hazard.

IDLH Atmospheres. Atmospheres immediately dangerous to life or health (IDLH) are those with less than 19.5 percent oxygen by volume, or which because of the high toxicity of the contaminant, would endanger the life of a person breathing them for even a short period of time.

Oxygen deficient is an atmosphere with less than 19.5 percent oxygen by volume.

(2) Fuel bins.

(a) Fuel bins must have adequate exits and all necessary devices to provide safety for employees who enter them.

(b) There may be sentry stations or tunnels near the bottom conveyor for employees to use to stoke down congested fuel through openings. Safely built pneumatic bottoms, mechanical agitators or scrapers and similar devices are acceptable.

(3) Entering confined spaces.

(a) Test first. Always test the atmosphere in a confined space before an employee places any part of their body into it. Following the instructions below, test first for oxygen, then flammable atmosphere then toxic atmosphere.

(b) Entry. No person may enter or work in any confined space with an atmosphere immediately dangerous to life or health (IDLH), except under the following conditions:

(A) They must wear a supplied air or self-contained air breathing apparatus;

(B) They must wear a safety belt with lifeline attached, where practical. Another person, equipped as required in subsection **(3)(b)(A)** above and with safety belt and lifeline attached, must be at the opening with adequate help available to remove the person if necessary (see **(5), Rescue** below);

(C) Failure of the person within the enclosure to respond to agreed upon signals requires immediate rescue action by a person or persons equipped as required in subsections **(3)(b)(A)** and **(B)** above;

(D) Air supplied to hose masks and positive pressure air helmets must be free from harmful dusts, fumes, mists, vapors, or gases to the extent that breathing it does not constitute harmful exposure. Position the air intake to the blower fan or compressor to prevent contamination of the air by carbon monoxide or other hazardous materials or gases;

(E) Supplied air respiratory equipment must have an automatic pressure relief valve, and connect through a pressure reduction valve in the supply line. Maximum allowable pressure, unless otherwise specifically approved, is 25 pounds per square inch;

(F) To assure safety when using positive-pressure air respiratory equipment, a minimum volume of air delivered to the user must be at least 4 cubic feet of air per minute for a face mask and 6 cubic feet of air per minute for hoods or helmets.

(c) Oxygen deficient atmospheres. The atmosphere in a sealed or unventilated confined space is considered immediately dangerous to life or health. Nobody may enter such space unless:

(A) All requirements for safety equipment and procedures in **(3)(b)** above are met; or

(B) A competent person tests the atmosphere with an oxygen indicator or other suitable device immediately before entry to ensure that it contains enough oxygen to sustain life; or

(C) Until mechanical ventilation provides at least one complete change of uncontaminated air immediately before entry and continues while anybody is inside the enclosure. A safety watcher meeting the requirements in **(3)(b)** above must be at the entry.

(d) Toxic atmospheres. Nobody may enter any sealed or unventilated tank or other confined space that contains or has contained toxic materials or gases, unless:

(A) All requirements for safety equipment and safety procedures in **(3)(b)** above are met, or a competent person tests the atmosphere with an appropriate instrument or method and finds it to have contaminants below the threshold limit values of the particular material or gas.

(B) If the atmosphere has concentrations of hazardous contaminants not immediately dangerous to life or health, but above the threshold limit values for the toxic material, the person entering the space must wear respiratory protective equipment approved by the National Institute of Occupational Safety and Health, or recommended by the U.S. Department of Agriculture for the exposure.

(e) Flammable or explosive atmospheres. The atmosphere in any sealed or unventilated tank or other confined space and that contains or has contained combustible or flammable materials or gases is an atmosphere immediately dangerous to life or health.

(A) Nobody may enter such space unless all requirements for safety equipment and safety procedures in **(3)(b)** above are met or atmosphere tests by a competent person using an appropriate instrument or method shows no flammable or explosive atmosphere is present.

(B) If the atmosphere contains flammable or explosive vapors at or above 20 percent of their lower explosive limit, ventilate the space enough to bring the level below 20 percent of the lower explosive limit. Otherwise only persons meeting the requirements of **(c)** above may enter the enclosure for emergency work, including preparatory work or work to set up equipment to eliminate the gas.

(f) Ventilation. Natural and/or mechanical ventilation must maintain the atmosphere within the limits permissible for explosive or toxic materials and gases while employees are in the space.

(g) Residues and other sources. When there could be a release of explosive or toxic materials from residues or other sources in a confined space, there must be additional testing as necessary to assure the atmosphere has not become immediately dangerous to life or health. If such conditions arise, immediately leave the contaminated space until the atmosphere is safe for persons wearing respiratory protective equipment.

(h) Physical hazards. Do not allow employees to enter confined spaces that contains physical hazards, until you comply with OAR 437-004-1275.

(i) Engulfment. Do not allow employees to enter confined spaces where there is a hazard from engulfment by collapsing material.

(j) Lifeline and attendant. When entering confined spaces that have loose material (such as chips, sand, grain, gravel, sawdust, etc.) you must wear a safety belt with lifeline. There must be an attendant for the lifeline.

(k) Lockout/tagout. Follow the procedures of OAR 437-004-1275, for intake pipelines that convey hazardous substances into confined spaces before workers enter. Blinds, if used, must clearly show whether the line is open or closed. Close, lock and attach warning tags to valves in such lines nearest the containers. Blinding or lockout of cold water and air lines is not necessary if they have positive control valves near the container and you lock, close and tag the valves.

(4) Training.

(a) Train all workers before they do anything covered by this section. Retrain workers when there are changes in their duties or the spaces related to this section.

(b) Training must cover all hazards associated with the employer's confined and hazardous spaces.

(c) Training must cover this standard and all duties associated with it.

(d) Keep written documentation of all training until it is superseded by new training.

(5) Rescue.

(a) These requirements apply to employers who have employees enter confined spaces to rescue people.

(A) You must give each rescuer the personal protective equipment and rescue equipment necessary to make rescues from hazardous spaces. You must also provide training on the proper use of that equipment.

(B) Train each rescuer in basic first aid and in cardiopulmonary resuscitation (CPR). At least one rescuer with current certification in first aid and in CPR must be available.

(b) When employers arrange to have persons other than their own employees do confined space rescue, the employer must:

(A) Inform the rescue service of the hazards they may confront during the rescue at the host employer's facility, and

(B) Provide the rescue service with access to all confined spaces from which rescue may be necessary so that the rescue service can develop appropriate rescue plans and practice rescue operations.

(c) To accomplish non-entry rescue, attach the other end of the retrieval line to a mechanical device or fixed point outside the hazardous space in a way that rescue can begin as soon as the rescuer becomes aware that rescue is necessary.

Stat. Auth.: ORS 654.025(2) and 656.726(4).
Stats. Implemented: ORS 654.001 through 654.295.
Hist: OR-OSHA Admin. Order 4-1998, f/8/28/98, ef. 10/1/98.

437-004-1260 Manure Lagoons, Storage Ponds, Vats, Pits and Separators.

(1) Scope. This applies to facilities not covered by confined space rules. (Examples include pole buildings used to store compost material or manure lagoons and separators.)

(2) General.

(a) Do not enter any vat, pit, separator or other hazardous area where the atmosphere may be immediately dangerous to life unless:

(A) Tests by a competent person, immediately before entry, prove it free of toxic gases and with enough oxygen to sustain life; or

(B) Mechanical or natural ventilation provides at least one complete change of uncontaminated air immediately before entry and continues during enclosure occupancy; or,

(C) The person entering the area is using a properly functioning supplied air or self-contained breathing apparatus, and is closely supervised by a safety watcher with similar equipment, at the entrance. They must have adequate help to remove the person if necessary.

(b) Vats and pits that have hazardous materials, manure or that are more than 4 feet deep, must meet one of the following requirements:

(A) A cover or grating must be in place and strong enough to safely support imposed loads; or

(B) The edges must extend at least 42 inches above the adjacent floor level; or,

(C) There is a standard guardrail.

(D) Where vehicles operate near vats or pits the railing must be strong enough to keep them out, or there must be a curb or shear rail that keeps the vehicle out.

(c) Manure lagoons or earthen manure storage ponds must have:

(A) Curbs, shear rails or other barriers where vehicles or equipment operate near enough to drive or roll into the lagoon.

(B) Standard guardrails or other protection where employees work over the contents or near enough to the edge to fall into the lagoon.

(C) Cables or chains that connect a vehicle to an adequate anchorage and are short enough to prevent the vehicle from rolling into the lagoon are acceptable.

Stat. Auth.: ORS 654.025(2) and 656.726(4).
Stats. Implemented: ORS 654.001 through 654.295.
Hist: OR-OSHA Admin. Order 4-1998, f/8/28/98, ef. 10/1/98.

437-004-1275 The Control of Hazardous Energy (Lockout/Tagout).

(1) Scope. This standard covers work on machines, vehicles and equipment when the unexpected energizing or starting of them, or release of stored energy could injure employees.

(2) Application.

(a) This standard applies to the control of energy during servicing and/or maintenance of machines and equipment.

(b) It does not cover normal production operations. It covers servicing and/or maintenance that takes place during normal production operations only if:

(A) An employee must remove or bypass a guard or other safety device; or

(B) An employee must place any part of the body where they do work on the material being processed (point of operation) or where a danger zone exists.

(c) It does not cover routine, repetitive minor tool changes, adjustments and other minor servicing activities, done during normal operations, if they are necessary to the use of the equipment and if the workers use alternative methods that provide effective protection.

(d) This standard **does not apply** to work on electric powered equipment, when unplugging it would control the hazard and the employee doing the work controls the plug totally. It also does not apply to work on vehicles when the person doing the work has the ignition key under their exclusive control and there are no other sources of hazardous energy that could be released without the key.

(3) Program requirement. Employers must establish an energy control program and use its procedures for putting appropriate lockout or tagout devices on energy isolating devices. They must disable machines or equipment to prevent injury to employees.

(4) Definitions.

Affected employee. One who operates a machine or equipment during service or maintenance under lockout or tagout. Also, those who work near where covered servicing or maintenance is done.

Authorized person. One who locks out or tags out machines or equipment to service or maintain them. An affected employee becomes an authorized person when they do service or maintenance covered here.

Energized. Connected to an energy source or containing residual or stored energy.

Energy isolating device. A mechanical device that physically prevents the transmission or release of energy. Examples: A manual circuit breaker; a switch; a manual switch that disconnects the conductors of a circuit from all ungrounded supply conductors and where employees can operate no pole independently; a line valve; a block; and any similar device used to block or isolate energy. Push buttons, selector switches and other control circuit type devices are not energy isolating devices.

Energy source. Any source of electrical, mechanical, hydraulic, pneumatic, chemical, thermal, gravity or other energy.

Lockable. An energy isolating device with its own lock or with a hasp or other way to attach a lock. Other energy isolating devices are lockable if they can be locked without being dismantled, rebuilt or replaced or permanently altering their energy control capability.

Lockout. The use of a lockout device on an energy isolating device, according to an established procedure to ensure that the controlled equipment is not operable until an authorized person removes the lockout device.

Lockout device. Something that uses a positive means such as a lock, to hold an energy isolating device in a safe position. Included are blank flanges and bolted slip blinds.

Normal operations. A machine or equipment doing its intended function.

Servicing and/or maintenance. Constructing, installing, setting up, adjusting, inspecting, modifying, and maintaining and/or servicing machines or equipment. This includes removing jams, lubrication or cleaning of machines or equipment and making adjustments or tool changes, where the process may expose the employee to the unexpected energizing or starting of the equipment or release of hazardous energy.

Setting up. Any work done to prepare a machine or equipment for operation.

Tagout. The placement of a tagout device on an energy isolating device, according to an established procedure, warning employees not to operate the energy isolating device and the equipment being controlled until an authorized person removes the tagout device.

Tagout device. A prominent warning device, such as a tag and a secure, sturdy means of attachment to an energy isolating device according an established procedure. The tag must warn employees not to operate the energy isolating device and the equipment being controlled until an authorized person removes the tagout device.

(5) General.

(a) Energy control program. Before doing any servicing or maintenance the employer must have a written energy control program with specific procedures, employee training and periodic reviews. It must ensure isolation of the equipment from the energy source and make it inoperative in a way to prevent injury.

(b) Lockout/tagout.

(A) If an energy isolating device is not lockable, the energy control program must use a tagout system that provides as much employee protection as is possible.

(B) If the energy isolating device is lockable, the energy control program must use lockout.

(C) Major repair, renovation or modification of a machine or equipment or installation of new machines or equipment requires new energy isolating device(s) to be lockable.

(c) Employee protection.

(A) When using a tagout device on a lockable energy isolating device, attach the tagout device where you would have put the lockout device.

(B) Full compliance with all parts of this standard related to tagout is necessary to assure the highest safety levels. Additional steps that help provide high employee protection include the removal of an isolating circuit element, blocking of a controlling switch, opening of an extra disconnecting device or the removal of a valve handle.

(d) Energy control procedure.

(A) Develop, document and use procedures for the control of potentially hazardous energy when employees are doing work covered by this section.

Note: Documenting the required procedure for a particular machine or equipment is not necessary when all of the following are true:

The machine or equipment has no potential for stored or residual dangerous energy or accumulation of stored dangerous energy after shut down;

The machine or equipment has an easily identified and isolated single energy source;

The isolation and locking out of that energy source will eliminate all energy-related hazards;

The machine or equipment is isolated from that energy source and locked out during servicing or maintenance;

A single lockout device will achieve a locked-out condition;

The lockout device is under the exclusive control of the authorized person doing the servicing or maintenance;

The servicing or maintenance does not create hazards for other employees; and

No accidents have happened that involved the unexpected activation or energizing of the machine or equipment during servicing or maintenance done under this exception.

(B) The procedures must specifically outline the scope, purpose, authorization, rules and methods that are mandatory for the control of hazardous energy. They must also include a way to enforce compliance including, but not limited to, the following:

(i) A specific statement of the intended use of the procedure;

(ii) Specific procedural steps for shutting down, isolating, blocking and securing machines or equipment to control hazardous energy;

(iii) Specific procedural steps for the placement, removal and transfer of lockout or tagout devices and the responsibility for them; and

(iv) Specific requirements for testing a machine or equipment to verify the effectiveness of lockout devices, tagout devices and other energy control measures.

(e) Protective materials and hardware.

(A) Each employee's lock must have either a key or combination that is **unique** to that device.

(B) The employer must provide the necessary locks and/or hardware to do all required lockout/tagout functions.

(C) Individually identify each lockout and tagout device. They must be the only devices used for controlling energy. Do not use devices meant for the lockout program for other purposes. They must meet the following requirements:

(i) Durable.

(I) Lockout and tagout devices must withstand their environment.

(II) Make tagout devices so that exposure to weather conditions or wet and damp locations will not cause them to deteriorate or the message on them to become illegible.

(III) Tags must not deteriorate in corrosive environments such as where you handle or store acid and alkali chemicals.

(ii) Standardized. Use lockout and tagout devices whose appearance is uniform within the facility and easily recognized.

(iii) Substantial.

(I) Lockout devices. Lockout devices must be sturdy enough to prevent removal without the use of excessive force or unusual methods or tools.

(II) Tagout devices. Tagout devices and their means of attachment, must be sturdy enough to prevent inadvertent or accidental removal. The attachment means must be single use and self-locking.

(iv) Identifiable. Lockout and tagout devices must show the identity of the employee who applied them.

(D) On energized machines or equipment, tagout devices must warn against hazardous conditions and must include a phrase like: Do Not Start, Do Not Open, Do Not Close, Do Not Energize, Do Not Operate.

(f) Annual Review.

(A) Do a review of the energy control program at least annually to ensure that it meets the requirements of this standard and employees are following it.

(i) An authorized person must do the review.

(ii) Correct problems found during the review.

(iii) For a lockout program, the review must include a personal review, between the inspector and each authorized person, of that employee's responsibilities under the program.

(iv) For a tagout program, the review must include a personal review, between the inspector and each authorized and affected employee, of that employee's responsibilities under the program.

(B) Document these reviews in writing with the identity of the machine or equipment covered by the program, the date of the review, the employees included in the review, and the person doing it.

(g) Training and communication.

(A) Provide general training that includes the following:

(i) Train authorized persons in the recognition of sources of hazardous energy, the type and amount of energy found in their workplace and the methods of energy isolation and control.

(ii) Instruct affected employees in the purpose and use of the energy control program.

(iii) Instruct other employees who work or may work where there may be energy control procedures, about those procedures and about the prohibition against attempts to restart or energize locked out or tagged out machines or equipment.

(B) For tagout systems, provide the following additional training:

(i) Locks are physical restraints while tags are only warning devices that provide less protection than locks.

(ii) Do not remove a tag attached to an energy isolating means, without authorization of the authorized person responsible for it. Never bypass, ignore or otherwise defeat a tagout device.

(iii) Tags must be legible and understandable by all employees whose work operations are or may be in the area.

(iv) Tags may cause a false sense of security. Understanding their meaning must be part of the overall energy control program.

(v) Securely attach tags to energy isolating devices so that they cannot be inadvertently or accidentally detached.

(C) Employee retraining.

(i) Retrain employees when a change in their job assignment, a change in machines, equipment or processes present a new hazard or when the program changes.

(ii) Retrain employees when a review shows or the employer has reason to believe, that there are problems in the employees' knowledge or use of the program.

(D) Document the employee training in writing with each employee's name and date(s) of training.

(h) Energy isolation. Authorized persons doing the servicing or maintenance must do the lockout or tagout.

(i) Notification of employees. Notify affected employees of the application and removal of lockout or tagout devices before applying the controls and after removing them from the machine or equipment.

(6) Application of control. The established procedures for the application of energy control (the lockout or tagout program) must cover the following points in the following sequence:

(a) Preparation for shutdown. Before an authorized or affected employee turns off a machine or equipment, they must know the type and amount of the involved energy, the hazards of the energy and the method to control it.

(b) Machine or equipment shutdown. Turn off the machine or equipment using the procedures established for it. Do an orderly shutdown to avoid new or increased hazards because of the equipment stoppage.

(c) Machine or equipment isolation. All energy isolating devices must be physically placed and used in ways that isolate the machine or equipment from the energy source(s).

(d) Lockout or tagout device application.

(A) Only authorized persons are to connect lockout or tagout devices to each energy isolating device.

(B) Connect lockout devices in a way that will hold the energy isolating devices in a "safe" or "off" position.

(C) Connect tagout devices in a way that will positively prevent operation or movement of energy isolating devices from the "safe" or "off" position.

(i) Directly connect the tag to the energy isolating device, otherwise it must be as close to the device as safely possible and obvious to anyone attempting to operate the device.

(e) Stored energy.

(A) After the application of lockout or tagout devices, relieve or make safe all potentially hazardous stored or residual energy.

(B) If stored energy can again reach a hazardous level, continuously verify its isolation until the servicing or maintenance is done or until the possibility is gone.

(f) Verification of isolation. Before starting work on locked out or tagged out machines or equipment, the authorized person must verify that isolation and de-energizing of the machine or equipment has been done.

(7) Release from lockout or tagout. The authorized person(s) must follow procedures and take actions to guarantee the following before removing lockout or tagout devices and restoring energy to the machine or equipment:

(a) The machine or equipment. Remove non-essential items from the work area and confirm the return of the machine or equipment to pre-lockout or normal running condition.

(b) Employees.

(A) Check the work area to ensure that all employees are safe or removed from the area.

(B) Notify affected employees after removing the lockout or tagout devices but before starting the machine or equipment.

(c) Lockout or tagout devices removal. Only the employee who applies it can remove a lockout or tagout device. However, when that employee is not available, the employer may direct its removal if specific procedures and training for such removal are a part of the employer's energy control program. The employer must show that the specific procedure is as safe as removal by the authorized person who applied it. The specific procedure must include at least the following:

(A) Verification by the employer that the authorized person who applied the device is not at the facility;

(B) Attempting to contact the authorized person to inform him or her about the removal of their lockout or tagout device; and

(C) Ensuring that the authorized person has this knowledge before he or she resumes work at that facility.

(8) Additional requirements.

(a) Testing or positioning of machines, equipment or components thereof. Follow this sequence of actions when it is necessary to temporarily remove lockout or tagout devices and energize the machine or equipment. This must only be done for testing or positioning the machine, equipment or component of it.

(A) Clear the machine or equipment of tools and materials;

(B) Remove employees from the machine or equipment area;

(C) Remove the lockout or tagout devices;

(D) Energize and go on with testing or positioning;

(E) Remove energy from all systems and reapply original energy control measures to continue the servicing and/or maintenance.

(b) Outside personnel (contractors, etc.).

(A) If outside servicing personnel are doing things covered by this standard, the on-site employer and the outside employer must coordinate their respective lockout or tagout procedures.

(B) The on-site employer must be certain that its employees understand and comply with the provisions of the outside employer's energy control program.

(c) Group lockout or tagout.

(A) When a crew, craft, department or other group does service or maintenance, they must use a procedure that gives employees a level of protection equal to that provided by using a personal lockout or tagout device.

(B) Use group lockout or tagout devices according to **OAR 437-004-1275(5)(d)** including, but not limited to, these requirements:

(i) Primary responsibility is with an authorized person for a set number of employees working under the protection of a group lockout or tagout device (such as an operations lock);

(ii) The authorized person must know the exposure status of individual group members with regard to the lockout or tagout of the machine or equipment, and;

(iii) When work involves more than one crew, craft, department, etc., assignment of overall job-associated lockout or tagout control responsibility to an authorized person designated to coordinate affected work forces and ensure continuity of protection, and;

(iv) Each authorized person must put a personal lockout or tagout device on the group lockout device, group lockbox, or comparable mechanism when they begin work, and must remove those devices when they stop working on the machine or equipment.

(d) Shift or personnel changes. Have specific procedures for shift or personnel changes to ensure the continuity of lockout or tagout protection. These must include the orderly transfer of lockout or tagout device protection between leaving and arriving employees. The procedure must minimize exposure to hazards related to the ongoing process.

Note: The following Appendix is a non-mandatory guideline to help employers and employees comply with the requirements.

Stat. Auth.: ORS 654.025(2) and 656.726(4).
Stats. Implemented: ORS 654.001 through 654.295.
Hist: OR-OSHA Admin. Order 4-1998, f/8/28/98, ef. 10/1/98.

Appendix A – Typical Minimal Lockout Procedure

GENERAL

This simple lockout procedure is to help employers so they meet the requirements of this standard. When the energy isolating devices are not lockable, tagout is OK if the employer complies with the provisions requiring additional training and more rigorous periodic reviews. When using tagout and the energy isolating devices are lockable, the employer must provide full employee protection (see paragraph (5)(c)), additional training and more rigorous periodic inspections. More complex systems may need more comprehensive procedures.

Lockout Procedure

Lockout procedure for

_____

(Name of Company for single procedure or identification of equipment if using multiple procedures.)

PURPOSE

These are the minimum requirements for the lockout of energy isolating devices when maintenance or servicing is done on machines or equipment. Use it to ensure that the machine or equipment stops and is isolated from all potentially hazardous energy sources. Lock it out before employees work where the unexpected energizing or starting or release of stored energy could cause injury.

COMPLIANCE WITH THIS PROGRAM

All employees must comply with the restrictions and limitations imposed upon them during the use of lockout. Require authorized persons to do the lockout following this procedure. When employees see a locked out machine or piece of equipment they must not attempt to start, energize or use it.

_____

Type of compliance enforcement for violation of the above.

SEQUENCE OF LOCKOUT

(1) Notify all affected employees about required service or maintenance on a machine or equipment and that it must be shut down and locked out to do the work.

_____

Name(s)/Job Title(s) of affected employees and how to notify.

(2) The authorized person must refer to the procedure to identify the type and amount of the energy that the machine or equipment uses, understand the hazards of the energy and know the methods to control it.

_____

Type(s) and amount(s) of energy, its hazards and the methods to control the energy.

(3) If the machine or equipment is operating, shut it down by the normal stopping procedure (depress stop button, open switch, close valve, etc.).

_____

Type(s) and location(s) of machine or equipment operating controls.

(4) Deactivate the energy isolating device(s) so that the machine or equipment is isolated from the energy source(s).

_____

Type(s) and location(s) of energy isolating devices.

(5) Lock out the energy isolating device(s) with assigned individual lock(s).

(6) Release or restrain stored or residual energy (such as that in capacitors, springs, elevated machine members, rotating flywheels, hydraulic systems and air, gas, steam, or water pressure, etc.) by methods such as grounding, repositioning, blocking, bleeding down, etc.

_____

Type(s) of stored energy – methods to release or restrain.

(7) Disconnect the equipment from the energy source(s) by first removing any exposed employees from the area. Then verify the isolation of the equipment by trying the normal operating control(s) or by testing to make certain that the equipment will run.

Caution: Return operating control(s) to neutral or “off” position after verifying the isolation of the equipment.

_____

Method of verifying the isolation of the equipment.

(8) The machine or equipment is now locked out.

RESTORING EQUIPMENT TO SERVICE. When the work is completed and the machine or equipment is ready to return to operation, take the following steps:

(1) Check the machine or equipment and the immediate area around it and remove any non-essential items. Be sure the machine or equipment is operationally intact.

(2) Safely position or remove all employees from the area.

(3) Verify that the controls are in neutral.

(4) Remove the lockout devices and energize the machine or equipment.

Note: The removal of some forms of blocking may require energizing of the machine beforehand.

(5) Notify affected employees that the work is complete and the machine or equipment is ready for use.

Stat. Auth.: ORS 654.025(2) and 656.726(4).
Stats. Implemented: ORS 654.001 through 654.295.
Hist: OR-OSHA Admin. Order 4-1998, f/8/28/98, ef. 10/1/98.

– END OF DOCUMENT –

TABLE OF CONTENTS

437-004-1305 Medical Services and First Aid K-1
- **(1)** Definitions K-1
- **(2)** First aid supplies K-1
- **(3)** Medical treatment and services K-1
- **(4)** Emergency medical plan K-1
- **(5)** Emergency eyewash, shower equipment, or both K-2

437-004-1305 Medical Services and First Aid.

(1) Definitions.

Emergency medical service is care by a medically trained person such as in a hospital, clinic, ambulance or rescue vehicle.

Qualified first aid person has evidence to show valid first-aid and CPR training within the last two years.

(2) First aid supplies.

(a) Provide first-aid supplies based on the types of injuries that could occur at the place of employment. The first-aid supplies must be immediately available to all workers on all shifts when needed. Do not lock up or otherwise restrict access to first-aid supplies.

(b) Protect first-aid supplies from damage, deterioration, or contamination. Clearly mark containers. First-aid containers may be sealed to protect the contents from contamination.

Note: Supplies such as nitrile gloves and a mouth barrier device are personal protective equipment covered by Division 4/I, Personal Protective Equipment.

(3) Medical treatment and services. Emergency medical services for injured or sick employees must be available and summoned in time to give appropriate treatment for the circumstances.

NOTE: These services can be by outside sources such as the local 911 response system or by employees who are qualified first-aid persons.

(4) Emergency medical plan.

(a) Determine the appropriate type of medical service for each place of employment. You must do a survey and develop an emergency medical plan. You must evaluate these areas:

(A) Determine the types of injuries and illnesses that are likely to occur at the worksite.

(B) Contact the local emergency response system and get information about their ability to handle these types of emergencies and their response time. Consider things such as nearness of the responding teams, traffic, equipment, average response times, and whether the system is staffed by volunteers or full-time people.

(C) Based on this information, decide whether the local response system can handle your situation or whether you need your own qualified first-aid persons.

(D) Train all employees about the medical plan and their responsibilities during an emergency.

(b) If the local response system is adequate, then the minimum emergency medical plan must contain the emergency phone number and emergency action instructions for employees in case of an injury or illness. Post this emergency medical plan where employees gather or are most likely to read it.

(c) If the response system is not adequate to handle your potential injuries or illnesses, then your plan must also contain clear and specific emergency action instructions for employees in case of injury or illness. The plan of action must have:

(A) The names, locations, and phone numbers of people trained and authorized to give first aid and other treatment.

(B) Any special instructions about communications like two-way radios, telephones or other provisions for emergency communication to contact the emergency medical services.

(C) A plan for transportation to the ambulance or nearest suitable medical facility.

(5) Emergency eyewash, shower equipment, or both.

(a) Based on the hazard, provide employees with an emergency eyewash, shower, or both to decontaminate themselves when one of the following applies:

(A) Employees use a chemical substance that can cause corrosion or permanent tissue damage to the eyes or when areas of the body may be exposed to quantities of materials that are either corrosive or toxic by skin absorption.

(B) Employees handle pesticide products labeled Danger or Danger/Poison, and with a first-aid section on the label that requires rinsing for 15-20 minutes for eye or skin exposure.

NOTE: OAR 437-004-1305(5) does not apply to eye flushing supplies required for early entry workers covered under 170.112(c)(8) or agriculture field workers covered under 170.150 of the pesticide Worker Protection Standard in Division 4, Subdivision W.

(b) Emergency eyewashes or showers, whether plumbed potable water systems or self-contained units, must meet the following requirements:

(A) Locate it so exposed employees can reach it and begin treatment in 10 seconds or less. The path must be unobstructed and cannot require the opening of doors or passage through obstacles unless other employees are always present to help the exposed employee.

(B) Install the equipment according to the manufacturer's instructions.

(C) Valves must stay open once activated, without the use of hands.

(D) Follow manufacturer's instructions for use and inspection.

(E) Fluid quality and temperature must be appropriate for the anticipated types of decontamination treatment.

(F) Flow and pressure must provide the needed treatment without risking injury to the employee.

(G) If the eyewash or shower could freeze, take protective measures to prevent this from occurring.

(c) If the product label or material safety data sheet requires specific decontaminants or procedures, you must provide them in addition to the eyewash or shower. Certain substances like acids, chlorine and anhydrous ammonia require special treatment.

NOTE: ANSI Z358 has information about the performance requirements for eyewashes and showers.

Stat. Auth.: ORS 654.025(2) and 656.726(4).
Stats. Implemented: ORS 654.001 through 654.295.
Hist: OR-OSHA Admin. Order 4-1998, f/8/28/98, ef. 10/1/98.
OR-OSHA Admin. Order 9-2006, f. 9/22/06, ef. 9/22/06.
OR-OSHA Admin. Order 4-2010, f. 7/8/10, ef. 1/1/11.

– END OF DOCUMENT –

TABLE OF CONTENTS

437-004-1430 Sources of Fire L-1

437-004-1440 Required Postings L-2

437-004-1450 Extinguishers L-3

437-004-1460 Fire Prevention Plan L-4

437-004-1470 Training L-4

437-004-1430 Sources of Fire.

(1) Definitions. These terms are used in Subdivision 4/L Fire:

Closed container – A container sealed with a lid or other device that prevents the loss of liquid or vapor at ordinary temperatures.

Combustible – A substance or material that is able or likely to catch fire and burn.

Explosive – Something capable of causing damage to the surroundings by chemical reaction.

Flammable – Something capable of being easily ignited, burning intensely or having a rapid rate of flame spread.

Flammable liquids – are liquids having a flash point at or below 199.4 degrees F. (93 degrees C.) As defined in the globally harmonized system of classification and labeling (GHS) adopted in OSHA's Hazard Communication Standard, flammable liquids are divided into four categories.

NOTE: Examples of some common flammable liquids are:
Category 1: Diethyl ether (solvent sometimes used in starting fluid).
Category 2: Gasoline (Benzene, Ethanol).
Category 3: Kerosene, Stoddard Solvent.
Category 4: Diesel fuel, Naphthalene.

NOTE: Additional information can be found in Division 4/B, 437-004-0100 Universal Definitions.

(2) Store combustible waste material, including oily rags in covered metal receptacles.

(3) If using electric lights, equipment and wiring where there may be flammable or explosive gases, vapors, mists, dust or fibers they must comply with the State Electrical Specialty Code.

NOTE: See additional electrical requirements in Division 4/S, OAR 437-004-3075 Agricultural Buildings with Special Hazards.

(4) Locate internal combustion engines so that there is a clearance of at least 6 inches between exhausts and exhaust piping and combustible material.

(5) Do not allow smoking, open flames, the use of spark-producing devices or tools not approved for use in such areas, and other sources of ignition:

(a) In fueling areas.

(b) When servicing fuel systems for internal combustion engines.

(c) When receiving or dispensing flammable liquids.

(d) Where using flammable liquids.

(e) Where storing flammable liquids.

(f) Areas that may have flammable or explosive gases, vapors, mists, dust, fibers or flyings.

NOTES:

- Other sources of ignition include cutting and welding; grinding hot surfaces; frictional heat; static, electrical and mechanical sparks; spontaneous ignition including heat producing chemical reactions; and radiant heat.
- There are more detailed standards for:
  The use and storage of flammable liquids in 4/H, OAR 437-004-0720;
  The use of liquefied petroleum gas (LPG) in 4/H, OAR 437-004-0780 and 437-004-0790;
  Fire prevention standards for welding operations are in 4/Q, OAR 437-004-2310.

Stat. Auth.: ORS 654.025(2) and 656.726(4).
Stats. Implemented: ORS 654.001 through 654.295.
Hist: OR-OSHA Admin. Order 4-1998, f/8/28/98, ef. 10/1/98.
OR-OSHA Admin. Order 3-2014, f. 8/8/14, ef. 8/8/14.

437-004-1440 Required Postings.

Post signs reading, “No Smoking or Open Flame,” in all areas:

(1) For fueling;

(2) For receiving or dispensing flammable liquids;

(3) For use or storage of flammable liquids; or

(4) Where there may be flammable or explosive gases, vapors, mists, dust, fibers or flyings.

NOTE: Signs reading “FLAMMABLE – KEEP FIRE AWAY” will also be in compliance with this rule.

Stat. Auth.: ORS 654.025(2) and 656.726(4).
Stats. Implemented: ORS 654.001 through 654.295.
Hist: OR-OSHA Admin. Order 4-1998, f/8/28/98, ef. 10/1/98.
OR-OSHA Admin. Order 3-2014, f. 8/8/14, ef. 8/8/14.

437-004-1450 Extinguishers.

NOTE: The Oregon Office of State Fire Marshal and local fire authorities also have rules that apply to portable fire extinguishers.

(1) Provide the class of fire extinguishers designed for use on the class of fire potential in the work area.

NOTE: To make it easy to use the right extinguisher, the NFPA 10 Extinguisher Standard uses the following system of classification:

Class A: Fires of ordinary combustible materials (such as wood, cloth, paper, rubber, and many plastics) requiring the heat-absorbing (cooling) effects of water, water solutions or the coating effects of certain dry chemicals that retard burning.

Class B: Fires of flammable liquids, flammable gases, grease and similar materials where extinguishment is best done by excluding air (oxygen), inhibiting the release of combustible vapors or interrupting the combustion chain reaction.

Class C: Fires of energized electrical equipment where safety to the operator requires the use of electrically nonconductive extinguishing agents. (**Note:** For nonenergized electrical equipment, Class A or B extinguishers may be best.)

Class D: Fires of certain combustible metals, such as magnesium, titanium, zirconium, sodium, potassium, etc., requiring a heat-absorbing extinguishing medium not reactive with the burning metals.

(2) Original labels and marking on extinguishers must remain attached and legible.

(3) Mount fire extinguishers on hangers, brackets, in cabinets or on shelves. The maximum height of the top of the extinguisher above the floor is:

Weight of Unit	Height of Top
40 lbs. or less	5 ft.
Over 40 lbs.	3 1/2 ft.

(4) Do not obstruct fire extinguishers. They must be in plain sight or clearly mark their location.

(5) Paths to and space in front of fire extinguishers must be clear and free from obstruction.

(6) Inspect fire extinguishers yearly or more often as needed to keep them usable and fully charged.

(7) Do not use fire extinguishers with carbon tetrachloride, chlorobromomethane or other toxic vaporizing fluids.

Stat. Auth.: ORS 654.025(2) and 656.726(4).
Stats. Implemented: ORS 654.001 through 654.295.
Hist: OR-OSHA Admin. Order 4-1998, f/8/28/98, ef. 10/1/98.
OR-OSHA Admin. Order 3-2014, f. 8/8/14, ef. 8/8/14.

437-004-1460 Fire Prevention Plan.

(1) The plan must be in writing, be kept in the workplace, and be available to employees. Employers with 10 or fewer permanent, year-around workers may have a verbal plan.

(2) The fire prevention plan must include at least these parts:

(a) Procedures to control accumulations of flammable or combustible waste materials;

(b) Procedures for regular maintenance of safeguards installed on heat producing equipment to prevent accidental ignition of combustible materials;

(c) Procedures for reporting possible fire producing situations.

(3) The employer must:

(a) Inform employees of the fire hazards in their work areas; and

(b) Review with each employee, new to a job, those parts of the fire prevention plan necessary for protection.

Stat. Auth.: ORS 654.025(2) and 656.726(4).
Stats. Implemented: ORS 654.001 through 654.295.
Hist: OR-OSHA Admin. Order 4-1998, f/8/28/98, ef. 10/1/98.
OR-OSHA Admin. Order 3-2014, f. 8/8/14, ef. 8/8/14.

437-004-1470 Employee Equipment and Training.

(1) If workers are expected or required to fight fires, their level of training and the fire fighting equipment they use must be adequate for the level of fire fighting involvement expected or required by the employer.

(2) The employer must provide all needed equipment and training at no cost to employees and be in compliance with Division 2/L, OAR 437-002-0182 Oregon Rules for Fire Fighters; 1910.155 Fire Protection; and 1910.156 Fire Brigades.

Stat. Auth.: ORS 654.025(2) and 656.726(4).
Stats. Implemented: ORS 654.001 through 654.295.
Hist: OR-OSHA Admin. Order 4-1998, f/8/28/98, ef. 10/1/98.
OR-OSHA Admin. Order 9-2006, f. 9/22/06, ef. 9/22/06.
OR-OSHA Admin. Order 3-2014, f. 8/8/14, ef. 8/8/14.

– END OF DOCUMENT –

TABLE OF CONTENTS

437-004-1505 Air Receivers and Pressure Systems M-1
(1) Application M-1
(2) General requirements M-1
(3) Installation and equipment requirements M-1
(4) Compressed air – general M-2
(5) Piping systems M-2
(6) High temperature piping M-2

437-004-1525 Boilers and Steam Systems M-3

437-004-1505 Air Receivers and Pressure Systems.

(1) Application. This section applies to compressed air receivers and other equipment making and using compressed air or gas. This section does not apply to the use of compressed air to move materials nor to work in compressed air as in tunnels and caissons. It also does not apply to compressed air machinery and equipment used on transportation vehicles.

(2) General requirements.

(a) New and existing equipment.

(A) Construct all new air receivers installed after the effective date of these regulations according to the 1995 edition of the A.S.M.E. Boiler and Pressure Vessel Code Section VIII.

(B) Construct, install and maintain all safety valves according to the A.S.M.E. Boiler and Pressure Vessel Code, Section VIII Edition 1995.

(3) Installation and equipment requirements.

(a) Installation. Install air receivers so that all drains, hand holes and manholes are easily accessible. Do not bury an air receiver underground or put it in an inaccessible place.

(b) Drains and traps. Install a drain pipe and valve at the lowest point of every air receiver to provide for the removal of accumulated oil and water. Adequate automatic traps are acceptable besides drain valves. To prevent excessive amounts of liquid in the receiver, open the drain valve and drain the receiver completely as often as needed.

(c) Gages and valves.

(A) Every air receiver must have an indicating pressure gage that is visible and with one or more spring-loaded safety valves. These valves together must prevent pressure from exceeding the maximum allowable working pressure by more than 10 percent.

(B) No valve of any type must be between the air receiver and its safety valve or valves.

(C) Construct and place safety and control devices so that people cannot defeat them and are protected from the elements.

(D) Test all safety valves frequently and assure they are in good operating condition.

(4) Compressed air – general.

(a) Never use compressed air or gas to clean clothing that is being worn. Never direct compressed air or gas at a person.

(b) Do not use compressed air for cleaning unless:

(A) It is reduced at the source to less than 30 p.s.i. and then only with effective chip guarding and personal protective equipment; or

(B) The outlet device or nozzle reduces end pressure to less than 30 p.s.i. when dead-ended or placed against an object, then only with effective chip guarding and personal protective equipment.

(c) All hose connections must be secure and maintained to be safe. Do not allow the hose to begin whipping.

NOTE: See 4/P, OAR 437-004-2230 for standards about using tools run by compressed air.

(5) Piping systems.

(a) All piping systems and their component parts that carry air, steam or other material at more than atmospheric pressure must safely withstand pressures to be placed upon them.

(b) To be acceptable for pressure line service with gaseous substances, non-metallic pipe must have its manufacturer's recommendation and listing for compressed air or gas service.

(A) Only use PVC pipe for compressed air if you bury or encase it.

(6) High temperature piping. High temperature is 140 degrees fahrenheit or higher.

(a) Cover all steam and other high temperature pipe lines within 7 feet of the floor or work platform or passageway with noncombustible insulating material or otherwise protect it against accidental contact with persons.

(b) All steam hose connections must be secure and maintained to be safe. Do not allow the hose to begin whipping.

Stat. Auth.: ORS 654.025(2) and 656.726(4).
Stats. Implemented: ORS 654.001 through 654.295.
Hist: OR-OSHA Admin. Order 4-1998, f/8/28/98, ef. 10/1/98.

437-004-1525 Boilers and Steam Systems.

NOTE: The Oregon Building Codes Agency (Boiler and Pressure Vessel Section) is the authority for Boilers and Pressure Vessels as defined in Oregon Boiler Pressure Vessel Law, ORS 480.510.

(1) All boilers and pressure vessels must meet minimum standards of design and operation in the Oregon Boiler and Pressure Vessel Safety Law.

(2) Permanently mark each control valve, not at the pressure vessel, with its source and function.

(3) Relief valve exhaust systems must withstand the forces involved. Their discharge must not endanger workers.

Stat. Auth.: ORS 654.025(2) and 656.726(4).
Stats. Implemented: ORS 654.001 through 654.295.
Hist: OR-OSHA Admin. Order 4-1998, f/8/28/98, ef. 10/1/98.

– END OF DOCUMENT –

TABLE OF CONTENTS

437-004-1610 General Requirements N-1
(1) Material storage N-1
(2) Stacks and piles N-1
(3) Bricks and blocks N-2
(4) Lumber N-2
(5) Bagged materials N-2
(6) Pipe and bar stock N-2
(7) Drums, rolls, cylindrical objects N-2
(8) Equipment design and construction N-2

437-004-1630 Conveyors N-3
(1) Controls N-3
(2) Backstops and brakes N-3
(3) Loading, transfer and discharge points N-3
(4) Guards N-3
(5) Portable conveyors N-3
(6) Riding prohibited N-4
(7) Ramps, skids, rollways N-4

437-004-1670 Automotive Hoists N-4

437-004-1680 Storage of Hazardous Chemicals N-4

437-004-1700 Forklifts and Other Powered Industrial Trucks N-6
(1) General requirements N-6
(2) Safety guards N-6
(3) Fuel handling and storage N-7
(4) Changing and charging storage batteries N-7
(5) Lighting for operating areas N-7
(6) Dockboards (bridge plates) N-7
(7) Trucks N-7
(8) Operator training N-9
(9) Truck operations N-9
(10) Traveling N-10
(11) Loading N-11
(12) Maintenance of powered industrial trucks N-11
(13) Control of gases and fumes N-12
(14) ROPS requirements N-12

437-004-1750 Helicopters N-12
(1) Scope N-12
(2) Briefing N-12
(3) Flight path N-12
(4) Area under the flight path N-12
(5) Drop zone – where N-12
(6) Drop zone – how big N-12
(7) Under the load of helicopter N-12
(8) Landing N-12
(9) Approach N-12
(10) Loads N-12
(11) Electric cargo hooks N-13
(12) Hardhats N-13
(13) Clothing N-13
(14) Flying objects N-13
(15) Hook approach N-13
(16) Rubber gloves N-13
(17) Weight limit N-13
(18) Limited visibility N-13
(19) Signal systems N-13
(20) Approach limit N-13
(21) Stay in view N-13
(22) Communication N-13
(23) Fire N-13
(24) Fueling N-14

437-004-1805 Rope, Chain, Rigging, and Hoists N-14
(1) Scope N-14
(2) Definitions N-14
(3) Loading and capacity N-15
(4) Inspection N-15
(5) Operators – handling loads N-15

437-004-1825 Tackle and Hoisting Equipment N-15
(1) Blocks, sheaves, shackles and drums N-15
(2) Chains N-16
(3) Hooks and attachment devices N-16
(4) Wire rope N-17
(5) Cable clips or clamps N-17
(6) Fiber rope N-18

437-004-1610 General Requirements.

(1) Material storage.

(a) Storage of material must not create a hazard. Stack, block or interlock stored items and limit their height so that they are stable and secure from sliding or collapse.

(b) Storage areas must be free from accumulated materials that are tripping, fire or explosion hazards.

(c) Pile foundations must support maximum loads without sinking, sagging, or tipping.

(d) Storage of toxic, flammable, radioactive, or irritating substances must comply with other appropriate parts of this standard, Division 4.

(e) Where mechanical handling equipment is in use, there must be safe clearance in aisles, at loading docks, through doorways and where turns are made. Aisles and passageways must be clear and in good repair.

(f) Workers must not be under or near elevated loads and moving material unless they have adequate protection.

(g) Block or crib loads suspended in slings or supported by hoists, jacks, or other devices, before allowing workers to be underneath them.

(h) Do not drop or throw material from an elevation to other people.

(i) Use tag lines or guide ropes when manual control is needed over swinging loads.

(j) Load pallet boards, and trays so that the material is stable.

(k) Stored material must not obstruct lights and fire extinguishing equipment, including sprinklers, aisles, exits, or electrical control panels.

(l) When storing materials that could cause hazardous reactions, segregate and mark them with appropriate warning signs.

(2) Stacks and piles.

(a) All material stacks and piles must be on level and solid supports and be stable.

(b) Use binding strips or cross ties when needed to stabilize stacks and piles.

(3) Bricks and blocks.

(a) Brick stacks must not be more than 7 feet high. When a loose brick stack reaches a height of 4 feet, cross tie it and taper it back 2 inches for every foot of height more than 4-foot.

(b) When stacking masonry blocks more than 6 feet high, cross tie and taper them back one-half block per tier above the 6-foot level.

(4) Lumber.

(a) Remove all nails from used lumber before stacking it.

(b) Lumber stacks must be made of units that are no more than 11/2 times higher than the smallest dimension of their base.

(5) Bagged materials.

(a) Stack bagged materials by stepping back the layers and cross keying the bags at least every 10 bags high.

Note: This requirement does not apply if pallets stabilize the stack of bagged materials.

(b) When removing bags from a pile, keep the pile stable.

(6) Pipe and bar stock. Take pipe and bar stock from the ends of unsecured piles, not from the side.

(7) Drums, rolls, cylindrical objects.

(a) Barrels, drums, large pipe, rolls of paper, and other cylindrical objects piled on their sides must have blocks to hold the bottom row. Separators between rows of the pile, must have blocks at each end.

(b) There must be spacing strips between bundles.

(8) Equipment design and construction.

(a) All equipment, structures, and accessories used for handling or storing materials must comply with sound engineering practices and the specifications and recommendations of the manufacturer. They must support the loads acting on them in addition to their own dead loads. Allow for wind, impact, erection and any special loadings that may occur. No combination of these loads may cause a stress on any part that exceeds the allowable stress for that part.

(b) Do not exceed equipment manufacturer's recommended safe load capacities.

Stat. Auth.: ORS 654.025(2) and 656.726(4).
Stats. Implemented: ORS 654.001 through 654.295.
Hist: OR-OSHA Admin. Order 4-1998, f/8/28/98, ef. 10/1/98.

437-004-1630 Conveyors.

(1) Controls.

(a) The operator's station must have a way to quickly stop the motor or engine.

(b) If the operator's station is remote from the power source, there must be a way to quickly stop the system at the motor or engine and at the operator's station.

(2) Backstops and brakes. Inclined conveyors, where reversing or running away is a hazard, must have anti-runaway backstop devices, or suitable guards.

(3) Loading, transfer and discharge points.

(a) Conveyor loading, transfer and discharge points must have a way to guard workers from injury by moving material.

(b) The area around all loading and unloading points must be clear of obstructions.

(4) Guards.

(a) Screw conveyors must have guards to prevent contact with turning flights.

(b) Where a conveyor passes over a work area, aisles or thoroughfares, there must be guards to prevent material from falling.

(c) Return sections of conveyors less than 7 feet above passageways and work areas, must have guards.

(d) Comply with Subdivision **4/O**, OAR 437-004-1910, Machine Guarding, for guarding conveyor drive mechanisms and power driven parts.

(e) Input conveyors for chippers, burners, furnaces, or other dangerous machines must have guards to prevent workers from falling into the conveyor. If the machine operation does not allow complete guarding of the opening, the worker must wear a life belt tied off to a lifeline.

(f) Workers must not walk across or step over conveyors except on bridges or walkways.

(5) Portable conveyors.

(a) Portable conveyors must be stable at all operating ranges and must have devices or be blocked to prevent unintended movement.

(b) Portable electric conveyors must be grounded. Wiring, switches, and electrical connections outside and exposed to the weather must be weatherproof and dustproof.

(6) Riding prohibited. Workers must not ride on a conveyor.

(7) Ramps, skids, rollways. Where the person putting material down a chute, ramp, skid, or rollway does not have a clear view of a lower landing where workers might be, there must be a working automatic warning device.

Stat. Auth.: ORS 654.025(2) and 656.726(4).
Stats. Implemented: ORS 654.001 through 654.295.
Hist: OR-OSHA Admin. Order 4-1998, f/8/28/98, ef. 10/1/98.

437-004-1670 Automotive Hoists.

(1) Automotive hoists elevated with a load to a position that is a hazard, must be supported by a safety device capable of preventing descent if the lift fails.

(2) Use the lifts according to the manufacturer's recommendations and those of ANSI B153.1-1990.

(3) Place vehicles on lifts according to the manufacturer's recommendations.

Stat. Auth.: ORS 654.025(2) and 656.726(4).
Stats. Implemented: ORS 654.001 through 654.295.
Hist: OR-OSHA Admin. Order 4-1998, f/8/28/98, ef. 10/1/98.

437-004-1680 Storage of Hazardous Chemicals.

(1) Store hazardous chemicals:

(a) Separately, to prevent hazardous reactions. Label storage areas by category to prevent the mixing of incompatible types of chemicals. (Examples of categories include: flammable liquids, acids, bases oxidizers.)

(b) In conformance with manufacturer's instructions on the label or Safety Data Sheet (SDS) to prevent conditions that could adversely affect container integrity or product stability.

(c) Separate from food and personal items to prevent contamination.

(d) Separate from sources of ignition. In locations where flammable vapors may be present, take precautions to prevent fires by eliminating or controlling sources of ignition.

NOTES:

Division 4/L, 437-004-1440, requires that signs reading "No Smoking or Open Flame" or "FLAMMABLE – KEEP FIRE AWAY" be posted in areas where flammable liquids are received, stored or dispensed.

Chemical storage areas should comply with appropriate state and local fire codes. Identify chemical storage buildings with a sign in accordance with NFPA 704.

Examples of ignition sources include open flames; smoking; cutting and welding activities; hot surfaces and radiant heat; frictional heat; static, electrical, and mechanical sparks; and, chemical and physical/chemical reactions.

(2) Ventilate storage areas, as needed to keep air contaminants below 25 percent of the lower explosive limit (LEL).

NOTE: Permissible explosive limits (PELs) for substances listed in **4/Z**, OAR 437-004-9000, Air Contaminants, also apply.

(3) Provide natural or artificial lighting equal to 20 foot-candles for safe entry into the storage area and to permit identification of chemical containers.

(4) Storage, handling, and removal of hazardous chemical containers must not cause hazards to workers.

NOTES: Other Division 4 rules with requirements that may apply to chemical storage areas include:

4/H: OAR 437-004-0720 Flammable Liquids.

4/H: OAR 437-004-0950 Hazardous Waste Operations and Emergency Response, when employees are required to cleanup certain emergency chemical spills.

4/K: OAR 437-004-1305(5) Emergency eyewashes and shower equipment, if required for emergency decontamination.

4/L, Fire: OAR 437-004-1430 through 1470, when storing or dispensing flammable liquids.

4/N: OAR 437-004-1610 General Requirements.

4/S, Electricity: OAR 437-004-2810 through 437-004-3075.

(5) The following additional requirements apply where storing Restricted Use Pesticides:

NOTE: Restricted Use Pesticides (RUPs) are a category of pesticide products that pose a higher risk to people, animals, or the environment. They can only be purchased by and used under the supervision of a person with a pesticide license.

(a) Lock the storage area to prevent access by unauthorized persons.

(b) Provide separate sections within the storage area for each category of pesticide product. (Examples include: insecticides, herbicides, fungicides, fumigants.) Label these areas by general category.

NOTE: The goal of separation is to prevent hazards to employees caused by the mixing of incompatible chemicals and the contamination of one type of product, or storage surface with a more toxic product due to a leak or spill.

(c) Floors and shelves must be constructed of a chemically-resistant material; or coated, sealed, or provided with secondary containment that prevents the absorption of the hazardous chemicals.

(d) When the storage area contains enough chemical that a leak or spill could cause the material to leave the confines of the building, there must be sufficient containment or other means to contain any leaks or spills within the storage area.

Stat. Auth.: ORS 654.025(2) and 656.726(4).
Stats. Implemented: ORS 654.001 through 654.295.
Hist: OR-OSHA Admin. Order 4-1998, f/8/28/98, ef. 10/1/98.
OR-OSHA Admin. Order 3-2014, f. 8/8/14, ef. 8/8/14.

437-004-1700 Forklifts and Other Powered Industrial Trucks.

(1) General requirements.

(a) This section has safety requirements for the maintenance and use of fork trucks, forklifts, platform lift trucks, motorized hand trucks, and other specialized industrial trucks used in agriculture. These are considered vehicles and additional standards are found in Division **4/U**. This does not apply to compressed air or non-flammable compressed gas-operated industrial trucks, nor to agricultural vehicles defined elsewhere in this standard, nor to vehicles intended primarily for earth moving or over-the-road hauling.

(b) Modifications and additions that affect capacity and safe operation must have the manufacturer's prior written approval. Change the capacity, operation and maintenance instruction plates, tags or decals to reflect any changes to the vehicle.

(c) If the truck has front-end attachments not installed by the factory, the truck markings must identify the attachments and show the approximate weight of the truck and attachment combination at maximum elevation with the load laterally centered.

(d) Keep nameplates and markings in place and legible.

(2) Safety guards.

(a) Overhead guards.

(A) If a lift truck operator could be struck by falling, or stacked objects, the truck must have an overhead guard. The guard must be strong enough to support impact load tests in Table 1:

Table 1

Rated Truck Capacity at 24" Load Center	Impact Test (Load X Drop Distance)	Minimum Weight of Test Load
3,000 and under	4,000 ft.-lbs.	750 lbs.
3,001 to 5,000 lbs.	8,000 ft.-lbs.	1,500 lbs.
5,001 to 8,000 lbs.	16,000 ft.-lbs.	3,000 lbs.
8,001 to 14,000 lbs.	24,000 ft.-lbs.	3,000 lbs.
14,001 to 25,000 lbs.	32,000 ft.-lbs.	3,000 lbs.
25,001 and over	36,000 ft.-lbs.	3,000 lbs.

(B) Guards that pass the test must have a metal tag permanently attached to the canopy where reading it from the ground is easy. This tag must show the impact test load, in foot-pounds to which similar guards have been tested.

Note: Guards required by **(2)(a)(A)** through **(C)**, or by the following rules, do not have to withstand the impact of a capacity load falling from any height.

(C) Untested guards must be made of material in Table 2 or material of equivalent strength or stronger.

Table 2

Rated Truck Capacity	Round Pipe		Square Tube (CRS)		
	(Std.)	(X Heavy)	(XX Heavy)	(3/16" Wall)	(1/4" Wall)
3,000 and under	1 1/2”	1 1/4”	---------	1 1/4”	---------
3,001 to 5,000 lbs.	2”	1 1/2”	---------	1 1/2”	---------
5,001 to 8,000 lbs.	2 1/2”	2”	1 1/2”	2”	---------
8,001 to 14,000 lbs.	3”	2 1/2”	2”	2 1/2”	2 1/2”
14,001 to 25,000 lbs.	---------	3 1/2”	3”	3 1/2”	3”
25,001 and over	---------	4”	---------	4”	3 1/2”

(D) The construction of canopy guards built to comply with **(C)** above presumes four upright members. Guards with less than four upright members must be equally strong.

(i) Canopy type overhead guard frames must have structural rigidity.

(ii) All guard mountings or attaching brackets must provide adequate support to the upright members of the canopy type overhead guard.

(iii) Cantilever overhead guards must be of equivalent strength.

(E) Guards must not interfere with good visibility. Openings in the top must not be more than 6 inches in one of their two dimensions. Guards must be large enough to extend over the operator under all normal circumstances of operation, including forward tilt.

(i) If the mast-tilting mechanism fails, the overhead guard must not injure the operator.

(ii) There must be at least 39 inches of clear vertical space between the operator’s seat when depressed and the underside of the guard. There must be at least 74 inches of clear vertical space between the platform for standing operators and the underside of the guard.

Note: Where overall height of truck with forks in lowered position is limited by head room conditions and there is insufficient space for vertical clearance or for the operator to assume a normal driving position, normal overhead guard heights may be reduced, or the overhead guard may be omitted. The height and stability of stacks of piled material, the weight of individual units handled, and the operating space available must provide reasonable safety for the operator if removing the overhead guard is necessary.

(b) Back rest. Lift trucks that handle small objects or loose units must have a vertical load back rest.

(A) It must be strong enough to prevent the load or any part of it from falling toward the operator.

(B) It must not interfere with good visibility.

(C) Size of openings must not be more than 6 inches in one dimension.

(c) Shear point guards. Shear points on forklift loaders and similar type vehicles must have guards.

(3) Fuel handling and storage.

(a) Store and handle liquid fuels according to 4/H, OAR 437-004-0720.

(b) Store and handle liquefied petroleum gas fuel according to 4/H, OAR 437-004-0780.

(4) Changing and charging storage batteries.

(a) Battery chargers must be in areas that are safe for that purpose.

(b) There must be facilities for flushing and neutralizing spilled electrolyte, for fire protection, for protecting charging apparatus from damage and for adequate ventilation.

(c) Use a conveyor, overhead hoist or equivalent material handling equipment to handle large batteries that power electric forklifts.

(d) Use only a carboy tilter or siphon to handle electrolyte.

(e) Pour acid into water not water into acid when servicing batteries.

(f) Set truck brakes before changing or charging batteries.

(g) Vent caps must function and the battery compartment cover(s) must be open to dissipate heat.

(h) There must be no smoking in the charging area.

(i) Prevent open flames, sparks, or electric arcs in battery charging areas.

(j) Keep tools and other metallic objects away from the top of uncovered batteries.

(5) Lighting for operating areas. Where general lighting is too dim, the vehicle must have its own directional lighting.

(6) Dockboards (bridge plates). See 4/D, OAR 437-004-0390(1).

(7) Trucks.

(a) Set the brakes on trucks or chock the rear wheels to prevent them from rolling while they are boarded with powered industrial trucks.

(b) Use nose jacks when necessary to support a semitrailer and prevent a nose dive during the loading or unloading.

(8) Operator training.

(a) Develop and use a training program for operators of powered industrial trucks. The employer or an outside training entity may give the training. It must contain at least the following:

(A) A study and test portion covering at least the rules in this standard, the information provided by the manufacturer for operation of the equipment and any special information dictated by the operating environment.

(B) A behind-the-wheel driving portion, supervised by a person competent in the operation of the particular equipment and familiar with the area and circumstances of its use.

(C) Tailor both parts to the specific type of equipment, the material being handled and the location of its use.

(b) Only fully trained workers may operate powered industrial trucks, except those under direct supervision as part of the behind-the-wheel training program.

(c) Conduct refresher training for drivers annually or when their driving record indicates the need for additional training, whichever is more frequent.

(d) Employers may not consider a new worker trained and qualified based on experience from a previous employer unless the previous experience was on the same type of equipment under substantially the same operating circumstances and the worker had a safe operating record acceptable to the new employer.

(9) Truck operations.

(a) Do not drive a powered industrial truck up to anyone standing in front of a fixed object.

(b) Do not stand or pass under the elevated part of a powered industrial truck.

(c) Only the operator may ride on a powered industrial truck unless it has a second seat or area intended for another rider.

(d) Do not put any part of the body between or reach through the uprights of the mast or outside the running lines of the truck.

(e)

(A) Fully lower the forks or platform on an unattended powered industrial truck. Also, neutralize the controls, turn off the power, and set the brakes. Block the wheels if it is on an incline.

(B) Unattended is when the operator is 25 feet or more away but vehicle remains in view or anytime the vehicle is not in view.

(C) When the operator gets off the truck but is within 25 feet and can still see it, the forks or platform must be down, the controls in neutral and the brakes set, unless loading or unloading items to or from the forks or platform.

(f) Keep a safe distance from the edge of ramps or platforms while on an elevated dock, platform or freight car.

(g) Whenever a truck has vertical only, or vertical and horizontal controls that elevate with the lifting carriage or forks for lifting personnel, do the following:

(A) Use a safety platform secured to the lifting carriage and/or forks.

(B) Have a way for people on the platform to shut off power to the truck.

(C) Provide protection from falling objects as necessary by the operating conditions.

(h) When using a forklift to lift people, take the following precautions:

(A) Use a platform with standard guardrails secured to the lifting carriage or forks.

(B) The hydraulic system must not be able to drop faster than 135 feet per minute if any part of the system fails.

(C) Someone must be in the operator's station while workers are on the platform.

(D) Someone must be in the normal operating position while raising or lowering the platform.

(E) Other than very slow inching, do not move the truck from point-to-point with the platform raised more than 4 feet while workers are on it.

(F) There must be a guard on the area between the platform and the mast to prevent contact with chains or other shear points.

(10) Traveling.

(a) Climb or descend grades slowly.

(A) Drive loaded trucks with the load upgrade if the incline is steep enough to spill the load.

(B) Tilt the load back and raise the forks or platform only as far as necessary to clear the road surface.

(b) Drive only as fast as conditions permit, leaving enough time to stop.

(c) Slow down on wet and slippery surfaces.

(d) Do not run over loose objects.

(11) Loading.

(a) Do not handle loads heavier than the rated capacity of the truck.

(b) Treat trucks with attachments as partially loaded trucks when not handling a load.

(c) The forks or platform must be under the load as far as possible and the mast tilted backward to stabilize the load.

(d) Do not tilt forward with forks or platform elevated except to pick up a load. Do not tilt an elevated load forward except when it is in a deposit position over a rack, chute or stack. When stacking or tiering, use only enough backward tilt to stabilize the load.

(12) Maintenance of powered industrial trucks.

(a) If a powered industrial truck needs repair, take it out of service until repairs are done.

(b) Do not add fuel while the engine is running.

(c) Clean up spilled oil or fuel or allow it to completely evaporate before restarting the engine. Do not use the vehicle without the fuel filler cap in place.

(d) Do not use a flame to check the electrolyte level in batteries or the level in fuel tanks.

(e) Only authorized persons may repair powered industrial trucks.

(f) Disconnect the battery before working on the electrical system.

(g) Use only replacement parts that assure equivalent safety as the originals.

(h) Do not change the relative positions of parts from what they were when the vehicle was made. Do not remove parts except as in **(l)** below. Do not add counter weighting to fork trucks without approval by the manufacturer.

(i) Check powered industrial trucks daily before using them. Do not use them if any condition is found that adversely affects the vehicle's safety.

(j) Remove from service any vehicle that gives off hazardous sparks or flames.

(k) Keep powered industrial trucks clean, free of lint, excess oil, and grease. Clean the trucks with noncombustible cleaners. Do not use low flash point (below 100 degrees F.) solvents. Follow the directions on the cleaner's label.

(l) You may convert powered industrial trucks from gasoline to liquefied petroleum gas fuel if the converted truck complies with the specifications for LP or LPG trucks. Use only approved conversion equipment.

(13) Control of gases and fumes. Take effective measures to keep the concentration levels of carbon monoxide gas created by powered industrial trucks below the levels in 4/Z, OAR 437-004-9000.

(14) ROPS requirements. Rollover protective structures are covered in 4/U, OAR 437-004-3650.

Stat. Auth.: ORS 654.025(2) and 656.726(4).
Stats. Implemented: ORS 654.001 through 654.295.
Hist: OR-OSHA Admin. Order 4-1998, f/8/28/98, ef. 10/1/98.
OR-OSHA Admin. Order 9-2006, f. 9/22/06, ef. 9/22/06.

437-004-1750 Helicopters.

(1) Scope. This applies to the use of helicopters to harvest ornamental trees.

(2) Briefing. You must hold a briefing before each day's work that covers the safety and communication procedures for the pilot and ground personnel.

(3) Flight path. There must be an established flight path from the pick up point. All employees in the area must know this path before lifting the first load from a new job site or when there is a change in procedures.

(4) Area under the flight path. Equipment or employees must not occupy the area under the flight path during helicopter flight.

(5) Drop zone – where. A pilot and responsible supervisor must establish the location of the drop zone, decking areas, loading areas, and designated safety zones, taking into consideration current operating conditions. Notify all workers on the landing when a change in operating procedures is necessary.

(6) Drop zone – how big. The landing drop zone must be large enough to handle all incoming bundles of trees without crowding the landing crew.

(7) Under the load of helicopter. Workers must never be under the load or the helicopter except one person to hook up or unhook the load. Workers may approach the load to pull the rigging only after the helicopter leaves the area above the landing.

(8) Landing. Landings must have the minimal slope necessary for drainage in the drop zone and decking area to prevent bundles from rolling.

(9) Approach. The approach to the landing must be as clear as possible.

(10) Loads. Loads must be properly slung. Tag lines must be short enough to prevent their being drawn up into the rotors. On freely suspended loads, you must use pressed sleeves, swedged eyes or equivalent means to prevent hand splices from spinning open or cable clamps from loosening.

(11) Electric cargo hooks. All electrically operated cargo hooks must have an electrical activating device that prevents inadvertent operation. They must also have an emergency mechanical control for releasing the load. A competent person must test the hooks before each day's operation to assure that the release functions properly, both electrically and mechanically.

(12) Hardhats. Workers must wear hardhats secured with chin straps, eye protection and other personal protective equipment when in the load receiving area.

NOTE: See Division **4/I** for specific requirements about Personal Protective Equipment.

(13) Clothing. Workers must not wear loose-fitting clothing that could flap in rotor downwash and snag on the hoist line.

(14) Flying objects. Take all necessary precautions to protect employees from flying objects in the rotor downwash. Secure or remove all loose gear within 100 feet of the pickup or landing area.

(15) Hook approach. There must be a safe way for employees to reach the hoist line hook and engage or disengage cargo slings.

(16) Rubber gloves. Workers must wear rubber gloves when handling suspended lines or they must use a grounding device to discharge static charges before touching the load.

(17) Weight limit. The weight of lifted loads must not exceed the helicopter manufacturer's rating.

(18) Limited visibility. The employer must ensure that when there is limited visibility because of dust or other conditions workers use special caution to keep clear of main and stabilizing rotors. The employer must also take precautions to eliminate, as far as practical, the dust or other conditions reducing visibility.

(19) Signal systems. The employer must instruct the aircrew and ground personnel on the signal systems in use and must review the system with the employees before flight operations begin. This applies to both radio and hand signal systems.

(20) Approach limit. Do not allow workers to approach within 50 feet of the helicopter when the rotor blades are turning, unless work duties require their presence in that area.

(21) Stay in view. Require employees who must approach the helicopter when blades are rotating to approach or leave in full view of the pilot and stay in a crouched position. Do not allow workers to be in the area from the cockpit or cabin rearward while blades are rotating.

(22) Communication. There must be constant reliable communication between the pilot and a designated member of the ground crew in the pickup and landing area. The designated member must be clearly distinguishable from other ground personnel.

(23) Fire. There must be no open fires where they could be spread by the rotor downwash.

(24) Fueling. Helicopter fueling areas must be separate from all other operations.

(a) Refueling of any type helicopter with aviation gasoline or Jet B (Turbine) type fuel must never be allowed while the engine is running.

(b) Refuel helicopters that use Jet A (turbine kerosene) type fuel with engines running only if these criteria are met:

(A) No unauthorized employees are within 50 feet of the operation or equipment, and;

(B) Fire extinguishers are available and have a combined rating of at least 16A:160BC.

(c) Train employees in the refueling operation and the use of the available fire extinguishing equipment.

(d) There must be no smoking, open flames, exposed flame heaters, flare pots or open flame lights within 50 feet of the fueling area or fueling equipment. The fueling area must be posted with “NO SMOKING” signs.

EXCEPTION: Aircraft pre-heaters are exempt. However, do not fuel while the heaters are in operation.

(e) Before refueling, ground the fueling equipment and the helicopter and electrically bond the fueling nozzle to the helicopter. Using conductive hose does not accomplish this bonding. All grounding and bonding connections must be electrically and mechanically firm to clean unpainted metal parts.

(f) Pump fuel only by hand or power, do not pour or use gravity flow. Nozzles must be self-closing or have deadman controls and must not be blocked open. Do not drag nozzles on the ground.

(g) In case of a spill, immediately stop fueling until the person in charge determines that it is safe to resume the operation.

Stat. Auth.: ORS 654.025(2) and 656.726(4).
Stats. Implemented: ORS 654.001 through 654.295.
Hist: OR-OSHA Admin. Order 4-1998, f/8/28/98, ef. 10/1/98.

437-004-1805 Rope, Chain, Rigging, and Hoists.

(1) Scope. These are standards for the safe use of hoists, rope, chain, and fittings.

(2) Definitions.

Mousing – Using small cordage or wire to prevent unintended separation of rigging components.

Rope – Wire rope unless otherwise specified.

(3) Loading and capacity. Do not load any rigging equipment or hoisting device more than its rated safe working load or capacity.

(4) Inspection. Inspect rigging and hoisting devices before use and as necessary during use to ensure safety. Immediately remove from service defective rigging or hoisting devices.

(5) Operators – handling loads.

(a) Workers must not ride hooks, slings, rigging, or loads. Suspend or elevate a person only when using a safe personnel lift.

(b) Personnel lift must meet these requirements:

(A) The structure must be rigid and strong enough to support loads with a safety factor of four times the intended load.

(B) The personnel lift must be big enough to accommodate all persons without crowding, and to provide sufficient work space so workers will not hinder or obstruct each other.

(C) There must be standard guardrails on all sides of the personnel lift. (See 4/D, OAR 437-004-0320(6) for guardrail design specifications.)

(D) The personnel lift must have supports on all four corners that provide full stability against tipping while occupied.

(E) Secure the load lifting attachment for the personnel lift to the crane or derrick hook in a way that will prevent accidental release.

(c) Only one person will give operating signals during hoisting operations.

EXCEPTION: In an emergency, anyone may give a “stop” signal; such signal must be obeyed.

(d) All persons must be in the clear before a signal is given to move a load or equipment.

Stat. Auth.: ORS 654.025(2) and 656.726(4).
Stats. Implemented: ORS 654.001 through 654.295.
Hist: OR-OSHA Admin. Order 4-1998, f/8/28/98, ef. 10/1/98.

437-004-1825 Tackle and Hoisting Equipment.

(1) Blocks, sheaves, shackles and drums.

(a) Use only sheaves and drums with diameters recommended by the wire rope manufacturer for the size rope.

(b) Secure all pins, including bearing and yoke pins, of all blocks against accidental displacement.

(c) Fit all blocks with line guards or design and use them in a way that prevents fouling.

(d) Sheaves carrying ropes that can be momentarily unloaded must have close-fitting guards or other suitable devices to guide the rope back into the groove when the load is applied again.

(e) Secure shackle pins used to hang blocks, jacks, or rigging, or that have hoisting chain, with: a bolt, nut and cotter pin (safety-type shackle); a screw pin with cotter pin; or they must be securely moused.

(f) Shackles used to hang blocks, jacks, or other rigging that can experience stress greater than that imposed by a single part of the pulling line must have a strength equal to but not less than two times the stress imposed by the pulling line.

(g) All shackles used for joining or attaching lines must have a strength of not less than 1 1/2 times that of the lines they join.

(h) Use clamps, socketing or other equal ways to securely fasten ends of lines attached to drums. Always keep at least two wraps of lines on drums.

(i) Do not guide lines onto drums with your hands in direct contact with the line. Use a guide pulley, tool, stick or other mechanical means to guide lines onto drums.

(2) Chains.

(a) Repair or remove from use hoisting chain when the increase in length (stretch) of the measured section exceeds 5 percent; or when there is a bent, twisted, or otherwise damaged link, or when raised scarfs or defective welds appear.

(b) Do not tie knots in a chain.

(c) Do not use lap links, cold shuts, or patent repair links for hoist chains or slings unless they are stronger than the chain.

(d) End fastenings must be capable of holding sustained loads equal to the breaking strength of the chain.

(3) Hooks and attachment devices.

(a) Remove from service any distorted or deformed hooks, rings, shackles, and other attachment devices or end fastenings.

(b) Do not use makeshift hooks, links, or fasteners such as those formed from rods, bolts, etc., or other such devices. Use only approved factory-made attachments or fasteners.

(c) When necessary to prevent lifting attachments from inadvertently lifting out of the hook, use a safety-type hook or other device.

(4) Wire rope.

(a) Wire rope and replacement wire rope must be the same size, same or better grade, and same construction as originally furnished by the equipment manufacturer or contemplated in the design, unless otherwise recommended by the equipment or wire rope manufacturer.

(b) Guard running wire ropes if they are within 7 feet of the floor or platform.

(c) Prevent friction of ropes with other objects that will cause chafing or breaking of wires. Use thimbles of proper size for the rope in all eye-splices to prevent friction and chafing of the eye.

(d) Remove from use wire rope used as guys, for hoisting or supporting objects, in cable-operated components, and on winches or drums, when any of the following exist:

(A) In standing ropes, more than two broken wires in one lay in sections beyond end connections or more than one broken wire at an end connection.

(B) Corroded, damaged, or improperly aligned end connections.

(C) Evidence of any heat damage from any cause.

(D) Wear of 1/3 the original diameter of outside individual wires. Kinking, crushing, bird caging, or any other damage resulting in distortion of the rope structure.

(E) Reductions from nominal diameter exceeding those in Table 1.

Table 1

Rope Size (inches)	Max Reduction (inches)
Up to 5/16	1/16
3/8 to 1/2	1/32
9/16 to 3/4	3/64
7/8 to 1 1/8	1/16
1 1/4 to 1 1/2	3/32

(5) Cable clips or clamps.

(a) When using cable clips or clamps for forming eyes, apply the U-bolt so that the “U” section contacts the dead end of the rope.

(b) When using U-bolt rope clips for forming eyes, use Table 2 to figure the number and spacing of clips.

Table 2

Rope Diameter (inches)	Number of Clips		Minimum Spacing (inches)
	Drop Forged	Other Material	
1/8 to 1/4	2	2	1 1/2
5/16 to 3/8	3	3	2 1/4
7/16 to 9/16	3	4	3
5/8	3	4	3 3/4
3/4	4	5	4 1/2
7/8	4	5	5 1/4
1	5	6	6
1 1/8	6	6	6 3/4

(c) The use of cable clips or clamps is acceptable only where they are readily accessible and subject to frequent inspection. Clips and clamps must be the correct size and properly applied. (See **(5)(a)** and **(5)(b)** above.)

(d) Do not use cable clips or clamps for joining lines except where transferring slack lines from one place to another.

(e) Do not use knots or combination knots and cable clip or clamp attachments as end connections for any hoisting rope or sling.

EXCEPTION: This rule does not apply to drop hammers of pile drivers.

(6) Fiber rope.

(a) Inspect fiber rope frequently. Do not use rope that shows visual signs of excessive wear, abuse, spots indicating caustic or acid damage, or other defect that would reduce the rated strength below the safe working load.

NOTE: The following procedure is recommended for inspection of rope:

(1) Examine the entire length of the rope for cuts or severe abrasions.

(2) Look for spots indicating acid damage.

(3) If there are acid spots, throw a twist in and out of the rope where the spots are; take a short kink in the rope and put on a strain. If the rope has acid damage, you will notice a weakness of the fibers.

(b) In manila rope, eye splices must have at least three full tucks, and short splices must have at least six full tucks (three on each side of the centerline of the splice).

(c) In layered synthetic fiber rope, eye splices must have at least four full tucks, and short splices at least eight full tucks (four on each side of the centerline of the splice).

(d) In fiber rope splices, do not trim strand end tails short (flush with the surface of the rope) immediately adjacent to the full tucks. This precaution applies to both eye and short splices and all types of fiber rope.

(e) For all eye splices in fiber rope, the eye must be big enough to provide an included angle not more than 60 degrees at the splice when the eye is over the load or support.

(f) Do not use knots instead of splices for joining fiber hoist ropes.

(g) When not in use, store fiber rope under cover in a clean, dry, well-ventilated place, free from excessive heat, and protected against corrosives and acid.

(h) Do not use frozen fiber rope. Do not heat frozen rope to thaw it out.

Stat. Auth.: ORS 654.025(2) and 656.726(4).
Stats. Implemented: ORS 654.001 through 654.295.
Hist: OR-OSHA Admin. Order 4-1998, f/8/28/98, ef. 10/1/98.

– END OF DOCUMENT –

TABLE OF CONTENTS

437-004-1910 General Equipment Guarding O-1
(1) Scope O-1
(2) Definitions O-1
(3) Operating instructions O-1
(4) Methods of guarding O-1
(5) Strength and design of guards O-2
(6) Guarding by location O-2
(7) Guarding by railings O-2
(8) Servicing and maintenance O-2
(9) Miscellaneous general requirements O-2
(10) Machine controls O-3
(11) Anchoring fixed machinery O-3

437-004-1940 Farm Field Equipment O-3
(1) Application O-3
(2) Definition O-3
(3) Power take-off guarding O-3
(4) Other power transmission components O-4
(5) Functional components O-4
(6) Access to moving parts O-4
(7) Electrical disconnect means O-4
(8) Additional requirements O-5

437-004-1970 Farmstead Equipment O-5
(1) Application O-5
(2) Definition O-6
(3) Power take-off guarding O-6
(4) Other power transmission components O-6
(5) Functional components O-6
(6) Access to moving parts O-7
(7) Additional guarding requirements O-7

437-004-2000 Powered Saws O-8
(1) Scope O-8
(2) General O-8
(3) Machine controls and equipment O-9
(4) Band saws O-9
(5) Radial arm saws O-10
(6) Table saws O-10
(7) Wobble saws O-11
(8) Cracks in blades O-11

437-004-2100 Grinders O-11
(1) Scope O-11
(2) Definitions O-11
(3) Use O-11
(4) Mounting O-12
(5) Safety guards O-12

437-004-1910 General Equipment Guarding.

(1) Scope – These are general requirements that apply to all equipment.

(2) Definitions.

Ground driven components – Components powered by the turning motion of a wheel as the equipment travels over the ground.

Guard or shield – A barrier to protect against contact with a moving machine part.

Point of operation – The area of a machine that contacts the work material.

Power take-off shafts – Shafts and universal joints between the tractor, or other power source, and the first gear set, pulley, sprocket, or other components on power take-off shaft driven equipment.

(3) Operating instructions.

(a) Instruct every employee on their initial assignment about the safe operation and servicing of all equipment they will use. Renew this instruction at least annually. Include at least these safe practices:

(A) Keep all guards in place when the machine is in use;

(B) Permit no riders on farm field equipment other than persons required for instruction or assistance;

(C) Stop engine, disconnect the power source and wait for all machine movement to stop before servicing, adjusting, cleaning, or unclogging the equipment. Instruct employees in the safe procedures necessary to service or maintain the equipment when it must remain running;

(D) Make sure everyone is clear of machinery before starting the engine, engaging power, or operating the machine;

(E) Refer to and comply with 4/J, OAR 437-004-1275, Lockout/Tagout.

(4) Methods of guarding.

(a) Except as otherwise stated, prevent contact with moving machinery parts as follows:

(A) By a guard or shield or guarding by location;

(B) When a guard or shield or guarding by location is infeasible, use a guardrail or fence.

(5) Strength and design of guards.

(a) Design and place guards to protect against inadvertent contact with the hazard.

NOTE: Minimum requirements for guards are in Table 1.

Table 1

Material	Clearance From Moving Parts at all Points (inches)	Largest Mesh or Opening Allowable (inches)	Minimum Gauge (U.S. Standard) or Thickness
Woven Wire	Under 2 2-4 4-15	3/8 1/2 2	No. 16 Gauge No. 16 Gauge No. 12 Gauge
Expanded Metal	Under 4 4-15	1/2 2	No. 18 Gauge No. 13 Gauge
Perforated Metal	Under 4 4-15	1/2 2	No. 20 Gauge No. 14 Gauge
Sheet Metal	Under 15		No. 22 Gauge
Plastic	Under 15		Tensile strength of 10,000 lb/in (2)

(b) Unless otherwise specified, each guard and its supports must be able to withstand the force applied to it.

(c) Guards must be free from burrs, sharp edges, and sharp corners. Secure guards to the equipment or building.

(6) Guarding by location. A component is guarded by location during operation, maintenance, or servicing when, because of its location, no employee can inadvertently come in contact with the hazard.

(7) Guarding by railings. Use guardrails or fences to protect employees from inadvertently entering the hazardous area.

(8) Servicing and maintenance. When a moving machinery part presents a hazard during servicing or maintenance, stop the engine, disconnect the power source, and wait for all machine movement to stop before proceeding, except where the employer can establish that:

(a) the equipment must be running for proper service or maintenance; and

(b) service or maintenance is not possible while a guard or guards required by these rules are in place.

(9) Miscellaneous general requirements. Cover or install a guard on machines that throw stock, material, or objects. (Such machines as rip saws, rotary mowers and beaters, rotary tillers are a few in this classification.)

(10) Machine controls.

(a) A power control switch to stop the machine or machine feed must be within reach of the operator without leaving their normal operating position.

(b) Mark the power control switch to indicate its function and the machine that it controls. Indicate the positions of ON and OFF.

(c) On fixed machines, use red or orange to mark “Stop” buttons. Each machine must have one or more stop buttons at or near to the working position of the operator(s).

(d) Locate and guard the machine control switch to prevent its unexpected or accidental movement. Recess electrical switch “Start” buttons.

(11) Anchoring fixed machinery. Securely anchor machines designed for a fixed location to prevent walking or moving.

Stat. Auth.: ORS 654.025(2) and 656.726(4).
Stats. Implemented: ORS 654.001 through 654.295.
Hist: OR-OSHA Admin. Order 4-1998, f/8/28/98, ef. 10/1/98.

437-004-1940 Farm Field Equipment.

(1) Application.

Rule 437-004-1940 applies to all farm field equipment except that the parts below do not apply to equipment manufactured before October 25, 1976:

1940(4)	1940(5)	1940(6)(b)(A)

(2) Definition.

Farm field equipment – Tractors or implements, including self-propelled implements, or any combination.

(3) Power take-off guarding.

(a) Guard all power take-off shafts with a master shield or by other protective guarding.

(b) Tractors must have a master shield or guard strong enough to support the operator if they get on or off the tractor using the shield as a step.

(c) Guard equipment driven by a power take-off to protect against employee contact with rotating parts of the power drive system. Where power take-off driven equipment requires removal of the tractor master shield, ensure the equipment includes protection from that portion of the tractor power take-off shaft that protrudes from the tractor.

(d) There must be signs on tractors and power take-off driven equipment to remind operators to keep safety shields in place.

(4) Other power transmission components.

(a) Guard the mesh or nip points of all power driven gears, belts, chains, sheaves, pulleys, sprockets, and idlers by protective shield, location, guardrail or fence.

(b) Guard all revolving shafts, including projections such as bolts, keys, or set screws, by protective shield, location, or guardrail or fence.

(c) Exceptions to the guarding requirements are as follows:

(A) Smooth off shafts and shaft ends (without any projecting bolts, keys, or set screws), revolving at less than 10 rpm, on feed handling equipment used on the top surface of materials in bulk storage facilities; and

(B) Smooth off shaft ends protruding less than one-half the outside diameter of the shaft and its locking means.

(5) Functional components. Guard as much as possible, all moving parts that must be exposed to operate. Ensure the guard does not interfere with the normal operation of the equipment. Examples of these components are snapping or husking rolls, straw spreaders and choppers, cutterbars, flail rotors, rotary beaters, mixing augers, feed rolls, conveying augers, rotary tillers, and similar units.

(6) Access to moving parts.

(a) Ensure that guards, shields, and access doors are in place when equipment is running.

(b) Where removal of a guard or access door will expose an employee to any component that continues to rotate after the power is disengaged, provide the following:

(A) A readily visible or audible warning of rotation; and

(B) A safety sign warning the employee to:

(i) Look and listen for evidence of rotation; and

(ii) Not remove the guard or access door until all components stop.

(7) Electrical disconnect means.

(a) Prevent application of electrical power from a location not under the immediate and exclusive control of the employee or employees maintaining or servicing equipment by:

(A) Providing an exclusive, positive locking means on the main or ignition switch which can be operated only by the employee or employees performing the maintenance and servicing; or

(B) In the case of material handling equipment in a bulk storage structure, by physically locating on the equipment an electrical or mechanical means to disconnect the power.

(b) Ensure all circuit protection devices, including those that are an integral part of a motor, are of the manual reset type.

(c) Exceptions to **(b)** above are where:

(A) The employer can establish that because of the nature of the operation, distances involved and the amount of time normally spent by employees in the area of the affected equipment, use of the manual reset device would be infeasible;

(B) There is an electrical disconnect switch available to the employee within 15 feet of the equipment being maintained or serviced; and

(C) There is a sign near each hazardous part warning the employee that unless they use the electrical disconnect switch, the motor could automatically reset while the employee is working on the hazardous component.

(8) Additional requirements.

(a) Use a clutch or other effective means for stopping powered machines not driven by an individual motor.

(b) Ensure sufficient clearance for all friction clutches and keep them adjusted to prevent any drag or creeping when disengaged.

Stat. Auth.: ORS 654.025(2) and 656.726(4).
Stats. Implemented: ORS 654.001 through 654.295.
Hist: OR-OSHA Admin. Order 4-1998, f/8/28/98, ef. 10/1/98.

437-004-1970 Farmstead Equipment.

(1) Application.

Rule 437-004-1970 applies to all farmstead equipment except that the parts below do not apply to equipment manufactured before October 25, 1976:

1970(4) 1970(5) 1970(6)(b)(A)

(2) Definition.

Farmstead equipment – Equipment that is normally stationary. This includes, but is not limited to, material handling equipment and accessories for this equipment whether or not it is an integral part of a building.

(3) Power take-off guarding.

(a) Guard all power take-off shafts with either a master shield or by other protective guarding.

(b) Guard power take-off driven equipment to prevent contact with positively driven rotating parts of the power drive system. If power take-off driven equipment requires removal of the tractor master shield, ensure that the equipment includes protection from that part of the tractor power take-off shaft that protrudes from the tractor.

(c) There must be signs on power take-off driven equipment to remind operators to keep safety shields in place.

(4) Other power transmission components.

(a) Guard the mesh or nip points of all power driven gears, belts, chains, sheaves, pulleys, sprockets, and idlers by protective shield, location, guardrail or fence.

(b) Guard all revolving shafts, including projections such as bolts, keys, or set screws, by protective shield, location, or guardrail or fence.

(c) Exceptions to the guarding requirements are as follows:

(A) Smooth off shafts and shaft ends (without any projecting bolts, keys, or set screws), revolving at less than 10 rpm, on feed handling equipment used on the top surface of materials in bulk storage facilities; and

(B) Smooth off shaft ends protruding less than one-half the outside diameter of the shaft and its locking means.

(5) Functional components.

(a) Guard to the fullest extent all functional components that must be exposed to operate. The guard must not substantially interfere with the normal operation of the equipment. Examples of these components are choppers, rotary beaters, mixing augers, feed rolls, conveying augers, grain spreaders, stirring augers, sweep augers, and feed augers.

(b) Guard sweep arm material gathering mechanisms on the top surface of materials within silo structures. Locate the lower or leading edge of the guard no more than 12 inches above the material surface and no less than 6 inches in front of the leading edge of the rotating member of the gathering mechanism. Ensure the guard is parallel to and extends the fullest practical length of the material gathering mechanism.

(c) Paragraph **(b)** above does not apply to bulk grain storage bins and similar structures where no workers are present except for installation or removal of the sweep arm material gathering mechanisms. During such work, disconnect and lockout the electrical power source following the procedures in OAR 437-004-1275, Division 4/J, Lockout/ Tagout.

(d) Guard exposed auger flighting on portable augers with either grating type guards or solid baffle style covers as follows:

(A) Ensure the largest dimensions or openings in grating type guards through which materials must flow are 4 3/4 inches. Ensure the area of each opening is no larger than 10 square inches. Locate the opening no closer to the rotating flighting than 2 1/2 inches.

(B) Ensure slotted openings in solid baffle style covers are not wider than 1 1/2 inches, or closer than 3 1/2 inches to the exposed flighting.

(C) Openings larger than those in **(A)** and **(B)** above are allowable if necessary to permit the free flow of material that has a tendency to bridge over. Ensure these openings are no larger than required for proper functioning of the auger. Design, arrange or locate the guard so that no part of an employee's body may contact the auger flighting.

(6) Access to moving parts.

(a) Ensure that guards, shields, and access doors are in place when the equipment is in operation.

(b) Where removal of a guard or access door will expose an employee to any component that continues to move after the power is disengaged, provide the following:

(A) A readily visible or audible warning of rotation; and

(B) A safety sign warning the employee to:

(i) Look and listen for evidence of rotation; and

(ii) Not remove the guard or access door until all parts stop.

(c) There must be a guard with openings no larger than 1/2-inch when the blades of a fan are less than 7 feet above the floor or working level.

(7) Additional guarding requirements.

(a) Properly safeguard carton or bag stitching machines to prevent employees from contacting the stitching head and other pinch or nip points.

(b) Guard the point of operation of all machines. Design and construct the guard to prevent any part of the operator's body from being in the danger zone during the operating cycle.

NOTE: Table 2 gives the distances that point-of-operation guards must be from the guarding line in relation to the size of the opening.

Table 2

Guarding Line or Distance of Opening from Point of Operation Hazard (inches)	Maximum Width of Opening (inches)
1/2 to 1 1/2	1/4
1 1/2 to 2 1/2	3/8
2 1/2 to 3 1/2	1/2
3 1/2 to 5 1/2	5/8
5 1/2 to 6 1/2	3/4
6 1/2 to 7 1/2	7/8
7 1/2 to 12 1/2	1 1/4
12 1/2 to 15 1/2	1 1/2
15 1/2 to 17 1/2	1 7/8
17 1/2 to 31 1/2	2 1/8

Stat. Auth.: ORS 654.025(2) and 656.726(4).
Stats. Implemented: ORS 654.001 through 654.295.
Hist: OR-OSHA Admin. Order 4-1998, f/8/28/98, ef. 10/1/98.

437-004-2000 Powered Saws.

(1) Scope – This applies to nonportable powered saws.

(2) General.

(a) Machines must not vibrate when the tool is run at full speed.

(b) Arbors and mandrels must have firm and secure bearing and be free from play.

(c) Do not use any automatic cutoff saw that strokes continuously without operator control of each stroke.

(d) Saw frames and tables must have lugs cast on the frame or an equivalent way to limit the size of the saw blade to avoid overspeed.

(e) Circular saw fences must attach to the table or table assembly without changing their alignment with the saw. The fences for tilting tables or tilting arbors must remain parallel with the saw regardless of the angle of the saw with the table.

(f) Circular saw gages must slide in accurately machined grooves or tracks to insure exact alignment with the saw for all positions of the guide.

(g) Hinged saw tables must be lockable in any position and in alignment with the saw.

(h) Guard all belts, pulleys, gears, shafts, and moving parts to comply with OAR 437-004-1970, Division 4/O.

(i) Electrically ground all equipment to comply with OAR 437-004-2810, Division 4/S.

(j) A guard must cover the rear portion of the saw beneath or behind the table when exposed to contact. An exhaust hood may serve this purpose if appropriate.

(k) Do not mount any saw, cutter head or tool collar on a machine not made to work with them.

(l) There must be combs (featherboards) or suitable jigs to use when a standard guard cannot be used, like for dadoing, grooving, jointing, moulding, and rabbeting.

(3) Machine controls and equipment.

(a) There must be a mechanical or electrical power control switch so the operator does not have to leave the point of operation to shut off the machine.

(b) Use a locking-type belt shifter or other positive device on machines driven by belts and shafting.

(c) Provide a positive method to prevent a machine from automatically restarting after a power failure.

(d) Locate power and operating controls within reach of the operator. Do not allow the operator to reach over the cutter head to make adjustments. This does not apply to constant pressure controls used only for setup.

(e) Provide a positive means to make electric motor driven machine controls and devices inoperable during repairs or adjustments.

(f) Protect foot-operated controls from unexpected or accidental activation.

(g) Cover feed rolls, of feeder attachments, to protect the operator from contacting hazardous parts.

(4) Band saws.

(a) Completely enclose band wheels. Construct guards of at least No. 14 U.S. gauge metal, nominal 2-inch wood material, or mesh or perforated metal of not less than U.S. gauge No. 20 with 3/8-inch or smaller openings.

(b) Enclose all portions of the band saw blade except the working side of the blade between the guide and the table.

(5) Radial arm saws.

(a) Radial arm saws must have a hood that completely encloses the upper portion of the blade down to a point that includes the end of the saw arbor.

(b) The saw blade must not extend beyond the front edge of the table or roll case.

(c) A lower blade guard must guard the lower part of the blade and stay in contact with the material during the entire cut.

(d) When ripping, radial arm saws must have anti-kickback fingers on each side of the saw.

(e) Mark the direction of saw rotation on the hood.

(f) Attach a permanent warning sign prohibiting rip or plough cuts from the rear of the guard. Rip and plough only against the direction of blade rotation.

(g) Blades or cutting heads on radial arm saws must automatically return gently and stay at the back of the table.

NOTE: Use a counterweight or other effective means, a retractor device, or tilt the arm sufficiently to keep the saw at the back when released by the operator.

(6) Table saws.

(a) Circular crosscut table saws must have a hood that covers the saw at least to the depth of the teeth.

(b) The hood must automatically adjust itself to the thickness of and remain in contact with, the material being cut. When the guard may mar the surfaces of material, it may be raised slightly to avoid contact.

(c) The hood must protect the operator from flying splinters and broken saw teeth.

(d) Fully guard rip table saws, and combination rip and crosscut table saws as required in **OAR 437-004-2000(4)(a)** and **(b)**. They must have a spreader and anti-kickback fingers. The spreader is not necessary when rabbeting, ploughing, grooving or for cutting dados.

(e) Fully guard the part of the table saw beneath the table.

(f) Use push sticks to guide short stock and ends through table saws without self-feeding devices.

(7) Wobble saws. Do not insert wedges between a saw disk and its collar to form a "wobble saw" for rabbeting.

NOTE: This rule does not apply to properly designed and adjustable rabbeting blades.

(8) Cracks in blades. Do not use a circular saw blade with a crack greater in length than those in the following table:

Length of crack	Diameter of saw in inches
1/2-inch	12 inches
1-inch	24 inches
1 1/2-inch	36 inches

Stat. Auth.: ORS 654.025(2) and 656.726(4).
Stats. Implemented: ORS 654.001 through 654.295.
Hist: OR-OSHA Admin. Order 4-1998, f/8/28/98, ef. 10/1/98.
OR-OSHA Admin. Order 9-2006, f. 9/22/06, ef. 9/22/06.

437-004-2100 Grinders.

(1) Scope – These rules apply to all grinders except:

Standards for portable, hand-held power-driven grinders are in OAR 437-004-2230, Division 4/P.

Natural sandstone wheels.

Metal, wooden, cloth or paper wheels or discs with a layer or layers of abrasive on the surface.

(2) Definitions.

Abrasive wheel – cutting device made of abrasive grains held together by organic or inorganic bonds, including diamond and reinforced wheels.

Off-hand grinding – The grinding of anything held in the operator's hand.

Portable grinding – A grinding operation where the grinding machine is hand held and easily moved from one place to another.

Safety guard – An enclosure for an abrasive wheel. It has a peripheral and two side members. Its purpose and design is to contain the pieces of the wheel if the wheel breaks while in use.

(3) Use.

(a) Mount grinders securely on the floor, bench, foundation or other structure.

(b) Do not use grinders that vibrate or are out-of-balance.

(c) Do not use abrasive wheels that are out-of-round or out-of-balance.

(d) Off-hand grinding machines must have work rests that are:

(A) Rigid and adjustable to compensate for wheel wear.

(B) Kept adjusted to within 1/8-inch of the wheel to prevent work from jamming between the wheel and the rest.

(C) Securely tightened after each adjustment.

(e) Do not adjust a moving wheel.

(f) Do side grinding only on wheels designed for that purpose.

NOTE: Dressing on the side of straight wheels is acceptable only with very light pressure.

(4) Mounting.

(a) Assure that grinding wheels fit freely but not loosely on the spindle and remain free under all grinding conditions.

(b) Do not operate an abrasive wheel designed to be held by flanges unless it is properly mounted between suitable flanges. Flanges must be at least one-third the diameter of the wheel, except for those types requiring flanges of a special design.

(c) Install blotters (compressible washers) between flanges and abrasive wheel surfaces to insure uniform distribution of flange pressure.

(d) Properly position the safety guard after mounting a wheel.

(e) Run the grinder at operating speed after mounting an abrasive wheel with the safety guard in place or in a protected enclosure for at least one minute before using it. Keep employees away from the front of the wheel during this time.

(f) Do not use wheels larger than those recommended by the manufacturer.

(5) Safety guards.

(a) Use abrasive wheels larger than 2 inches in diameter only on machines with safety guards.

(b) These do not require safety guards:

(A) Specially-shaped abrasive wheels mounted in a mandrel-type bench or floor stand and used for and commonly known as “sickle grinding stones or wheels.”

(B) Abrasive wheels where the work itself provides full protection but only while the wheel is within the area of protection.

NOTE: Abrasive wheel safety guards must meet the design specifications of the American National Standard Code for the Use, Care, and Protection of Abrasive Wheels (ANSI B7.1-1988).

(c) Abrasive wheels must have guards that cover the spindle end, nut, and outer flange projection of the wheel. Guard the sides and periphery of the wheel except for that degree of exposure permitted below.

(A) Bench and floor stands.

(i) The maximum permissible angle of exposure is 90 degrees. Begin this exposure at a point not more than 65 degrees above the horizontal plane of the wheel spindle.

(ii) Do not exceed 125 degrees exposure where the nature of the work requires contact with the wheel below the horizontal plane of the spindle. Begin this exposure at a point not more than 65 degrees above the horizontal plane of the wheel spindle.

(B) Swing frame grinders. The maximum permissible angle of exposure is 180 degrees. Enclose the top half of the wheel.

(C) Top grinding. Do not exceed 60 degrees exposure of the grinding wheel periphery where the work contacts the top of the wheel.

(d) The peripheral protecting part of safety guards must adjust to compensate for wheel wear when the operator stands in front of the opening.

(e) Maintain 1/4-inch between the wheel periphery and the adjustable tongue or the guard above the wheel.

Stat. Auth.: ORS 654.025(2) and 656.726(4).
Stats. Implemented: ORS 654.001 through 654.295.
Hist: OR-OSHA Admin. Order 4-1998, f/8/28/98, ef. 10/1/98.

– END OF DOCUMENT –

TABLE OF CONTENTS

437-004-2220 General Requirements – Small Tools P-1

437-004-2230 Guarding and Operation of Portable Powered Tools P-2
(1) Portable powered tools P-2
(2) Pneumatic tools and hose P-3
(3) Portable abrasive wheels P-4
(4) Tools driven by internal combustion engines P-8
(5) Explosive actuated fastening tools P-9

437-004-2240 Power Lawnmowers P-13
(1) General requirements P-13
(2) Walk-behind and riding rotary mowers P-14
(3) Walk-behind rotary mowers P-14
(4) Riding rotary mowers P-15

437-004-2260 Other Portable Tools and Equipment P-16
(1) Jacks P-16
(2) Abrasive blast cleaning nozzles P-16
(3) Hand powered equipment P-16
(4) Wheelbarrows, hand trucks, dollies, pallet jacks P-17
(5) Varmint killers (explosive gas and oxygen) P-17

437-004-2220 General Requirements – Small Tools.

(1) Employers are responsible for the safe condition of tools and equipment used by employees. This includes tools and equipment that belong to employees.

(2) Do not use defective tools.

(3) When not in use, place tools where they will not create a hazard.

(4) Do not use tools whose electric cords have damaged insulation or defective parts.

(5) Do not leave power supply lines or hoses where they may be damaged or create a hazard.

(6) Tool handles must have no sharp edges or splinters and must be firmly attached to the tool. Wooden handles of tools must be of firm straight grained stock.

(7) Dress or grind the heads of shock tools (such as hammers, sledges, and cold chisels) as they begin to mushroom or crack. When they show a tendency to chip, take them out of service.

(8) Keep the cutting edges of tools uniformly sharp.

(9) Use heavy leather holsters, guards or equivalent protection for sharp-edged or sharp-pointed tools carried on the worker's person.

(10) When using sharp-edged cutting tools, wear appropriate protective equipment such as gloves, aprons and leg guards.

(11) Use spark-resistant hand tools in explosive or flammable atmospheres.

NOTE: Compressed air used for cleaning. See 4/M, OAR 437-004-1505(4) for rules about cleaning with compressed air or gas.

Stat. Auth.: ORS 654.025(2) and 656.726(4).
Stats. Implemented: ORS 654.001 through 654.295.
Hist: OR-OSHA Admin. Order 4-1998, f/8/28/98, ef. 10/1/98.

437-004-2230 Guarding and Operation of Portable Powered Tools.

(1) Portable powered tools.

(a) Portable circular saws.

(A) All portable, power-driven circular saws with a blade diameter greater than 2 inches must have guards above and below the base plate or shoe. The upper guard must cover the saw to the depth of the teeth, except for the minimum arc to permit tilting the base for bevel cuts. The lower guard must cover the saw to the depth of the teeth, except for the minimum arc that allows proper retraction and contact with the work. When the tool is taken out of the work, the lower guard must automatically and quickly return to covering position. This does not apply to meat cutting saws.

(B) In addition to the provisions in **(1)(a)(A)** above, the lower guard must have a lug or lever, remote from the blade teeth, that allows the operator to safely lift the guard for starting unusual cuts.

(b) Switches and controls.

(A) All hand-held powered circular saws with a blade diameter more than 2 inches, electric, hydraulic or pneumatic chain saws and percussion tools without positive accessory holding means must have a constant pressure switch or control that will shut off the power when pressure is released.

(B) The following hand-held powered tools must have a constant pressure control switch. They may have a lock-on control if a single motion of the same finger or fingers that turns it on can turn it off.

(i) Tappers, drills, fastener drivers, horizontal, vertical and angle grinders with wheels more than 2 inches in diameter. Disc sanders with discs more than 2 inches in diameter. Belt sanders, reciprocating saws, saber, scroll and jig saws with blade shanks more than a nominal 1/4-inch and other similarly operating powered tools.

(C) All other hand-held powered tools may have either a positive “on-off” control, or other controls as in **(1)(b)(A)** and **(B)** above.

(i) Saber, scroll and jig saws with non-standard blade holders may use blades with shanks which are non-uniform in width, if the narrowest part of the shank is an integral part in mounting the blade.

(ii) Measure the blade shank width at the narrowest part of the blade when saber, scroll and jig saws have non-standard blade holders.

(iii) “Nominal” in this subparagraph means +0.05-inch.

(D) Exclusions. This subparagraph does not apply to concrete vibrators, concrete breakers, powered tampers, jack hammers, garden appliances, household and kitchen appliances, personal care appliances or to fixed machinery.

(c) Power chain saws.

(A) In addition to **(1)(b)(A)** above, all power chain saws must meet American National Standard B175.1-1991, Safety Code for Power Chain Saws.

(B) Inspect power chain saws daily when in use and always keep them in good repair. Do not use saws with cracked or loose handle bars or defective parts.

(C) Stop power chain saw engines before fueling.

(D) Power chain saws must have a working chain brake if originally equipped with one.

(E) Chain brakes and other safety features must always work correctly.

(F) All hand-held gasoline powered chain saws must have a constant pressure throttle control that will shut off power to the saw chain when the pressure is released.

(G) Employees using chain saws must wear flexible ballistic nylon pads, chaps or other equivalent protection in a manner that protects the legs from the thigh to the top of the boot. Employers must provide and pay for this equipment.

(H) Do not drop-start chain saws or other power saws.

NOTE: Drop-starting saws is permitted outside of the basket of an aerial lift only after ensuring that the area below the aerial lift is clear of people.

(I) The operator must have secure footing when starting the saw.

(J) Start and operate the saw only when all other workers are clear.

(K) Stop the engine when carrying the power saw but not between cuts during consecutive felling, bucking, limbing or cutting operations.

(i) The chain must not be turning and the operator's hand must be off the throttle lever while moving between work locations.

(ii) Carry small chain saws at your side with the bar of the saw pointed to the rear.

(L) Stop the engine for all cleaning, refueling, adjustments, and repairs to the motor.

(d) Portable belt sanders. Belt sanders must have guards at each nip point where the sanding belt runs onto a pulley. These guards must prevent the operator's hands or fingers from contacting the nip points. The unused run of the sanding belt must have guards against accidental contact.

(e) Cracked saws. Do not use cracked saws.

(f) Grounding. Portable electric powered tools must meet the requirements of Subdivision **4/S**.

(2) Pneumatic tools and hose.

(a) Only use compressed air supply hose and hose connections rated for the pressure and service required by the tools they serve.

(b) There must be a shut-off valve at the manifold or permanent pipe outlet of the compressed air supply.

(c) Do not couple or uncouple hose without first shutting off the compressed air supply unless the couplers have check valves that automatically shut it off.

(d) Pneumatic fastener-driving tools and other power-driven fastener tools, except as allowed in **(e)** below, must have a safety device to prevent ejection of nails, staples or fasteners when the tool is not in firm contact with the work.

(e) You may use power-driven fastener-driving tools without the safety device only when using staples with a diameter of .0475-inch (18 gauge A.W.G.) or less and the operator and all workers within 15 feet are wearing suitable eye protection. This does not apply to office staplers.

(f) Do not use oxygen or combustible gases to drive pneumatic tools.

(g) Direct the exhaust from pneumatic power tools away from the operator.

(3) Portable abrasive wheels.

Definitions.

Mounted wheels. Mounted wheels of 2-inch diameter or smaller, of various shapes. They may be either organic or inorganic bonded abrasive wheels. They are secured to plain or threaded steel mandrels.

Organic bonded wheels. Organic wheels are wheels bonded by an organic material such as resin, rubber, shellac or other similar bonding agent.

Portable grinding. A grinding operation where the grinding machine is hand-held and may move easily from one location to another.

Reinforced wheels. The term **"reinforced"** as applied to grinding wheels defines a class of organic wheels that contain strengthening fabric or filament. The term "reinforced" does not cover wheels using such mechanical additions as steel rings, steel cup backs or wire or tape winding.

Safety guard. A safety guard is an enclosure to restrain the pieces of the grinding wheel if it breaks while in use.

Tuck pointing. Removal, by grinding, of cement, mortar or other non-metallic jointing material.

Tuck pointing wheels. Tuck pointing wheels, Type 1, reinforced organic bonded wheels have diameter, thickness and hole size dimension. They are subject to the same limitations of use and mounting as Type 1 wheels.

Limitation: Wheels used for tuck pointing should be reinforced, organic bonded.

Type 11 flaring cup wheels. Type 11 flaring cup wheels have double diameter dimensions D and J, and in addition have thickness, hole size, rim and back thickness dimensions. Grinding is always done on the rim face, W dimension. Type 11 wheels are subject to all limitations of use and mounting listed for Type 6 straight sided cup wheels.

Type 11 Flaring Cup Wheels

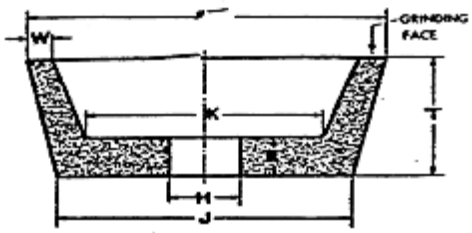

Figure 1

Side grinding wheel with a wall flared or tapered outward from the back. Wall thickness at the back is normally greater than at the grinding face (W).

Limitation: Minimum back thickness, E dimension, should not be less than one-fourth T dimension. Also, when unthreaded hole wheels are specified the inside flat, K dimension, must be large enough to hold a suitable flange.

Type 6 straight cup wheels. Type 6 cup wheels have diameter, thickness, hole size, rim thickness and back thickness dimensions. Grinding is always done on the rim face, W dimension.

Type 6 Straight Cup Wheels

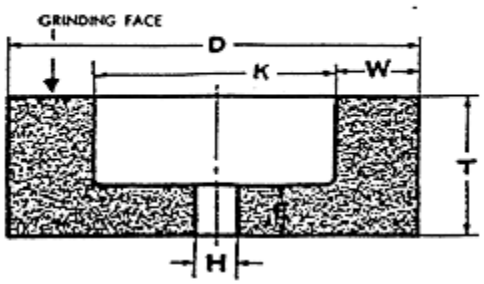

Figure 2

Side grinding wheel with a diameter, thickness and hole with one side straight or flat and the opposite side recessed. This type, differs from Type 5 in that the grinding is on the wall of the abrasive created by the difference between the diameter of the recess and the outside diameter of the wheel. Therefore, the wall dimension "W" takes precedence over the diameter of the recess as an essential intermediate dimension to describe this shape type.

Limitation: Minimum back thickness, E dimension, should not be less than one-fourth T dimension. In addition, when unthreaded hole wheels are specified, the inside flat, K dimension, must be large enough to hold a suitable flange.

Type one straight wheels. Type 1 straight wheels have diameter, thickness and hole size dimensions and should be used only on the periphery. Mount type 1 wheels between flanges.

Type 1 Straight Wheels

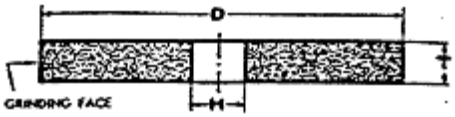

Figure 3

Peripheral grinding wheel with a diameter, thickness and hole.

Limitation: Hole dimension (H) should not be greater than two-thirds of wheel diameter dimension (D) for precision, cylindrical, centerless or surface grinding applications. Maximum hole size for all other applications should not exceed one-half wheel diameter.

(a) General requirements. Use abrasive wheels only on machines with safety guards as in **OAR 437-004-2230(3)(a)** through **(d)**.

(A) Exceptions. The requirements of paragraph **OAR 437-004-2230(3)(a)** do not apply to the following classes of wheels and conditions.

(i) Wheels for internal work while within the work being ground;

(ii) Mounted wheels, 2 inches and smaller in diameter, used in portable operations (see definition of Mounted Wheel); and

(iii) Types 16, 17, 18, 18R, and 19 cones and plugs and threaded hole pot balls where the work offers protection.

(B)

(i) A safety guard must cover the spindle end, nut and flange projections. Mount the safety guard so as to maintain proper alignment with the wheel. The strength of the fastenings must exceed the strength of the guard.

(ii) Exception. If the work provides a suitable measure of protection to the operator, safety guards may allow exposure to the spindle end, nut and outer flange. Where the work entirely covers the side of the wheel, you may omit the side covers of the guard.

(iii) Exception. On portable machines designed for and used with, type 6, 11, 27, and 28 abrasive wheels, cutting off wheels and tuck pointing wheels, you may leave the spindle end, nut and outer flange exposed.

(b) Cup wheels. Protect cup wheels (Types 6 and 11) by:

(A) Using safety guards in **OAR 437-004-2230(3)(a)**; or,

(B) Using special **"revolving cup guards"** that mount behind the wheel and turn with it. They must be steel or other material with adequate strength and must enclose the wheel sides upward from the back for one-third of the wheel thickness. The mounting features must conform with all regulations. (See **OAR 437-004-2230 (3)(e)**.) Keep a maximum clearance of 1/16-inch between the wheel side and the guard; or,

(C) Using another form of guard that insures protection equal to that provided by the guards in **OAR 437-004-2230(3)(a)(A)** or **(B)**.

(c) Vertical portable grinders. Safety guards on machines known as right angle head or vertical portable grinders must have a maximum exposure angle of 180 degrees. Place the guard between the operator and the wheel during use. Adjust the guard to deflect pieces of a broken wheel away from the operator. (See Figure 4.)

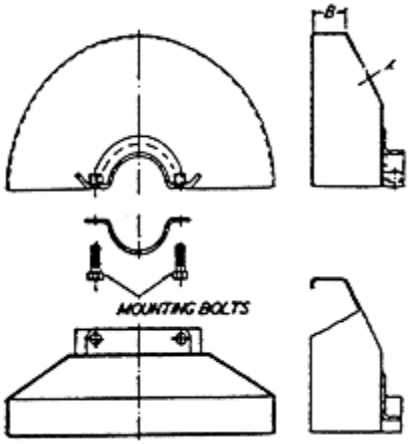

Figure 4

(d) Other portable grinders. The maximum angular exposure of the grinding wheel periphery and sides for safety guards used on other portable grinding machines must not exceed 180 degrees. Enclose the top half of the wheel. (See Figures 5 and 6.)

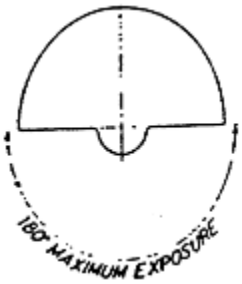

Figure 5

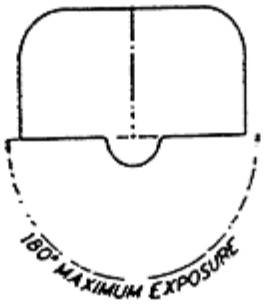

Figure 6

(e) Mounting and inspection of abrasive wheels.

(A) Immediately before mounting, inspect all wheels to make sure they are not damaged. Check the spindle speed of the machine before mounting the wheel to be sure it does not exceed the maximum operating speed marked on the wheel.

(B) Grinding wheels must fit freely on the spindle and remain free under all grinding conditions. Keep a controlled clearance between the wheel hole and the machine spindle (or wheel sleeves or adaptors) to avoid excessive pressure from mounting and spindle expansion.

(C) All contact surfaces of wheels, blotters and flangers must be flat and free of foreign matter.

(D) When using a bushing in the wheel hole it must not exceed the width of the wheel nor contact the flanges.

(E) Do not operate an abrasive wheel designed to be held by flanges unless it is properly mounted between suitable flanges. Flanges must be at least one-third the diameter of the wheel, except for those types requiring flanges of a special design.

(F) Install blotters (compressible washers) between flanges and abrasive wheel surfaces to insure uniform distribution of flange pressure.

(f) Excluded machinery. OAR 437-004-2230(3) does not cover natural sandstone wheels and metal, wooden, cloth or paper discs with a layer of abrasive on the surface.

(4) Tools driven by internal combustion engines.

(a) Tools driven by internal combustion engines must have a positive “On” and “Off” ignition switch that will remain in either position.

(b) Tools driven by internal combustion engines must have effective means to control power except those that operate at constant speed. Throttle controls must return the engine to idling speed when released.

(c) Tools driven by internal combustion engines must have a self-rewinding starting device or be equally safe.

(d) Exhaust ports on tools driven by internal combustion engines must have mufflers and deflect exhaust fumes away from the operator when the tool is in use in its normal operating position.

(e) Stop the engine before fueling tools driven by an internal combustion engine.

(f) You must be able to quickly remove sling-carried tools powered by attached portable internal combustion engines.

(g) Inspect the fuel system of sling-carried tools before each use. Fix any defect immediately.

(5) Explosive actuated fastening tools.

Definitions.

Angle control. A safety feature designed to prevent a tool from operating when tilted beyond a pre-determined angle.

Cased Power Load. A power load with the propellant contained in a closed case.

Caseless Power Load. A power load with the propellant in solid form not requiring containment.

Direct-Acting Tool. A tool in which the expanding gas of the power load acts directly on the fastener to be driven.

Explosive power load, also known as **load**. Any form of any substance that can produce a propellant force.

Fixture. A special shield that gives equal protection where the standard shield is not usable.

Hammer-operated piston tool – low-velocity type. A tool that uses a heavy mass hammer and a load to move a captive piston to drive a stud, pin or fastener into a work surface. It always starts the fastener at rest and in contact with the work surface. Its design must limit the mean velocity of the stud, pin or fastener to a maximum of 300 feet per second when measured 6.5 feet from the muzzle end of the barrel.

Head. That part of a fastener that extends above a work surface after being properly driven.

High-velocity tool. A tool or machine that uses a load to propel or discharge a stud, pin or fastener, at velocities greater than 300 feet per second when measured 6.5 feet from the muzzle end of the barrel.

Indirect-Acting Tool. A tool in which the expanding gas of the powder load acts directly on a captive piston that in turn drives the fastener.

Low-velocity piston tool. A tool that uses a load and captive piston to drive a stud, pin or fastener into a work surface. Its design must limit the mean velocity to a maximum of 300 feet per second when measured 6.5 feet from the muzzle end of the barrel.

Misfire. A condition in which the powder load fails to ignite after an attempt to fire the tool.

Powder-Actuated Fastening System. A method comprising the use of a powder-actuated tool, a power load and a fastener.

Powder-Actuated Tool, also known as **Tool**. A tool that uses the expanding gases from a power load to drive a fastener.

Protective shield or guard. A device or guard to confine flying particles, attached to the muzzle end of the tool.

Stud, pin, or fastener. A fastening device specifically designed and manufactured for use in explosive-actuated fastening tools.

Test Velocity. A series of deliberately free-flighted fasteners whose velocities are measured 6 1/2 feet from the muzzle end of the tool using accepted ballistic test methods.

To chamber. To fit properly without the use of excess force and without being loose in the chamber.

Tool. Unless indicated otherwise, an explosive-actuated fastening tool and all its accessories.

(a) General requirements.

(A) Explosive-actuated fastening tools actuated by explosives or any similar means that propel a stud, pin, fastener or other object to affix it to another object must meet the design requirements in paragraph (b) below. This requirement does not apply to devices designed for attaching objects to soft construction materials, such as wood, plaster, tar, dry wallboard and the like or to stud welding equipment.

(B) Operators and assistants using tools must wear eye protection. If required by the working conditions, use head and face protection as required under Personal Protective Equipment (4/I).

(b) Inspection, maintenance, and tool handling.

(A) High-velocity tools. High velocity tools must have these characteristics:

(i) The muzzle end of the tool must have a protective shield or guard at least 3 1/2 inches in diameter, mounted perpendicular to and concentric with the barrel. It must confine any flying fragments or particles that might be a hazard when fired.

(ii) Where a standard shield or guard will not work or where it does not provide adequate protection, an alternate device is acceptable. It must be built by the manufacturer of the tool, and provide an equal degree of protection.

(iii) It must be impossible to fire the tool unless it has a standard protective shield or guard, or the special device in **(ii)** above.

(iv)

(I) The firing mechanism must prevent the tool from firing during loading or preparation to fire, or if dropped while loaded.

(II) Firing of the tool must require at least two separate and distinct actions of the operator. The final firing movement must be separate from the action of bringing the tool into the firing position.

(v) The tool must not work unless the operator is holding the tool against the work surface with a force at least 5 pounds more than the total weight of the tool.

(vi) The tool must not be operable with the standard guard indexed to the center position if any bearing surface of its guard tilts more than 8 degrees from contact with the work surface.

(vii) The tool must have a positive way of varying the power or there must be some other way for the operator to select a power level adequate to perform the work without excessive force.

(B) Tools of the low-velocity piston type must have the characteristics in **(i)** through **(iv)** below.

(i) The muzzle end of the tool must allow suitable protective devices, designed and built by the manufacturer of the tool, to be mounted perpendicular to the barrel. There must be a standard spall shield with each tool.

(ii)

(I) In ordinary use the tool must not propel or discharge a stud, pin or fastener while loading or during preparation to fire or if dropped while loaded.

(II) Firing of the tool must depend on at least two separate and distinct actions of the operator. The final firing movement must be separate from the operation of bringing the tool into the firing position.

(iii) The tool must not to be operable unless the operator is holding it against the work surface with a force at least 5 pounds greater than the total weight of the tool.

(iv) The tool must have a positive way of varying the power or there must be some other way for the operator to select a power level adequate to perform the work without excessive force.

(C) Hammer operated piston tools, low-velocity type, must have the characteristics in **(i)** through **(iv)** below.

(i) The muzzle end of the tool must allow suitable protective devices, designed and built by the manufacturer of the tool, to be mounted perpendicular to the barrel. There must be a standard spall shield with each tool.

(ii) In ordinary use the tool must not propel or discharge a stud, pin or fastener while loading or during preparation to fire or if dropped while loaded.

(iii) Firing of the tool must depend on at least two separate and distinct actions of the operator. The final firing movement must be separate from the operation of bringing the tool into the firing position.

(iv) The tool must have a positive way of varying the power or there must be some other way for the operator to select a power level adequate to perform the work without excessive force.

(c) Requirements for loads and fasteners.

(A) There must be a standard way to identify the power levels of loads.

(B) Do not use a load (cased or caseless) that will accurately chamber in any existing approved commercially available low-velocity piston tool or hammer operated piston tool, low-velocity type, if it will cause a fastener to have a mean velocity greater than 300 feet per second when measured 6.5 feet from the muzzle end of the barrel. No individual test firing of a series can exceed 300 feet per second by more than 8 percent.

(C) Only use fasteners specifically made for a given tool.

(d) Operating requirements.

(A) Before using a tool, inspect it to see that it is clean, all moving parts operate freely and that the barrel is free of obstruction.

(B) When a tool develops a defect during use, immediately stop using it.

(C) Do not load tools until just prior to the intended firing time. Do not point loaded or empty tools at anyone.

(D) Do not leave loaded tools unattended.

(E) If the tool misfires, hold it in the operating position for at least 30 seconds. Then try to operate the tool a second time. Wait another 30 seconds with the tool in the operating position. If it still does not fire remove the explosive load according to the manufacturer's instructions.

(F) Do not leave tools unattended where they are available to unauthorized persons.

(G) Do not drive fasteners into very hard or brittle materials like cast iron, glazed tile, surface-hardened steel, glass block, face brick or hollow tile.

(H) Do not drive fasteners into soft materials so that the projectile could exit the other side.

(I)

(i) Do not drive fasteners directly into materials such as brick or concrete closer than 3 inches from the unsupported edge or corner or into steel surfaces closer than 1/2-inch from the unsupported edge or corner, unless the tool has a special guard. (**Exception:** Low-velocity tools may drive no closer than 2 inches from an edge in concrete or 1/4-inch in steel.)

(ii) When fastening other materials, such as a 2-inch by 4-inch wood section to a concrete surface, it is permissible to drive a fastener of no greater than 7/32-inch shank diameter not closer than 2 inches from the unsupported edge or corner of the work surface.

(J) Do not drive fasteners through existing holes unless you use a positive guide for accurate alignment.

(K) Do not drive a fastener into a spalled area caused by an unsatisfactory fastening.

(L) Do not use explosive actuated tools in an explosive or flammable atmosphere.

(M) Use all tools with the correct shield, guard or attachment recommended by the manufacturer.

(N) Take damaged or defective tools out of service. Inspect tools at regular intervals and repair them according to the manufacturer's specifications.

Stat. Auth.: ORS 654.025(2) and 656.726(4).
Stats. Implemented: ORS 654.001 through 654.295.
Hist: OR-OSHA Admin. Order 4-1998, f/8/28/98, ef. 10/1/98.
OR-OSHA Admin. Order 9-2006, f. 9/22/06, ef. 9/22/06.
OR-OSHA Admin. Order 7-2008, f. 5/30/08, ef, 5/30/08.

437-004-2240 Power Lawnmowers.

(1) General requirements.

(a) Powered walk-behind, riding-rotary and reel lawnmowers designed for sale to the general public must meet the design specifications in "American National Standard Safety Specifications for Power Lawnmowers" ANSI/OPEI B71.1-1996. These specifications do not apply to a walk-behind mower converted to a riding mower by the addition of a sulky. Also, these specifications do not apply to flail mowers, sickle bar mowers or mowers designed for commercial use.

(b) Guard or place all power-driven chains, belts and gears to prevent accidental contact with the operator, during normal starting, mounting and operation of the machine.

(c) There must be a shutoff device to stop the motor or engine. It must require manual and intentional reactivation to restart the motor or engine.

(d) Clearly mark all positions of the operating controls.

(e) The phrase, "Caution. Be sure the operating control(s) is in neutral before starting the engine," or similar wording must be clearly visible at an engine starting control point on self-propelled mowers.

(2) Walk-behind and riding rotary mowers.

(a) Enclose the mower blade except on the bottom. The enclosure must extend to or below the lowest cutting point of the blade in the lowest blade position.

(b) There must be instructions near the opening warning not to use the mower without either the catcher assembly or the guard in place. This does not apply to side discharge mowers or those with a mulching plug in place.

(c) Properly and completely installed catcher assemblies must not create a hazard.

(d) The word “Caution,” or stronger wording, must be on the mower at or near each discharge opening.

(e) Blade(s) must stop from the manufacturer’s specified maximum speed within 15 seconds after declutching or shutting off power.

(3) Walk-behind rotary mowers.

(a) The horizontal angle of the grass discharge opening(s) in the blade enclosure, must not directly discharge toward the operator area.

(b) There must be one of the following at all openings in the blade enclosure intended for the discharge of grass:

(A) A minimum unobstructed horizontal distance of 3 inches from the end of the discharge chute to the blade tip circle.

(B) A rigid bar fastened across the discharge opening, secured to prevent removal without the use of tools. The bottom of the bar must be no higher than the bottom edge of the blade enclosure.

(c) Keep the handle attached to the mower to prevent loss of control by unintentional uncoupling while the engine is running.

(d) There must be a positive upstop or latch for the handle in the normal operating position(s). The upstop must not be subject to unintentional disengagement when using the mower. The upstop or latch must not allow the center or the handle grips to come closer than 17 inches horizontally behind the closest path of the mower blade(s) unless manually disengaged.

(e) A swing-over handle, that complies with the above requirements, is acceptable.

(f) Wheel drive disengaging controls, except deadman controls, must move opposite to the direction of the vehicle motion in order to disengage the drive. Deadman controls must automatically interrupt power to a drive when the operator lets go and may operate in any direction to disengage the drive.

(4) Riding rotary mowers.

(a) Opening(s) must not allow grass or debris to discharge directly toward any part of an operator seated in a normal operator position.

(b) One of the following must be at all grass discharge openings in the blade enclosure:

(A) A minimum unobstructed horizontal distance of 6 inches from the end of the discharge chute to the blade tip circle.

(B) A rigid bar fastened across the discharge opening, secured to prevent removal without the use of tools. The bottom of the bar must be no higher than the bottom edge of the blade enclosure.

(c) Mowers must have stops to prevent jackknifing or locking of the steering.

(d) Mowers must have working brakes or a manufacturer designed system for stopping.

(e) Hand-operated wheel drive disengaging controls must move opposite to the direction of vehicle motion to disengage the drive. Foot-operated wheel drive disengaging controls must be depressed to disengage the drive. Deadman controls, both hand and foot-operated, must automatically interrupt power to a drive when the operator removes the actuating force and may operate in any direction to disengage the drive.

Stat. Auth.: ORS 654.025(2) and 656.726(4).
Stats. Implemented: ORS 654.001 through 654.295.
Hist: OR-OSHA Admin. Order 4-1998, f/8/28/98, ef. 10/1/98.

437-004-2260 Other Portable Tools and Equipment.

(1) Jacks.

Definitions.

Jack. A jack is an appliance for lifting and lowering or moving horizontally a load by pushing.

Rating. The maximum safe load throughout its course of travel.

(a) Loading and marking.

(A) Do not use a jack with a rating less than the weight of the intended load.

(B) Keep the rated load legibly and permanently marked on the jack.

(b) Operation and maintenance.

(A) If the jack is not on a firm foundation, block its base. If the cap might slip, place a block between it and the load.

(B) Watch the stop indicator and do not go past the limit of travel.

(C) Quickly crib, block or otherwise secure the load after raising it.

NOTE: This does not apply when changing wheels on 4-wheeled vehicles when only one wheel is raised and the employee does not place any part of their body under the vehicle.

(D) Hydraulic jacks exposed to freezing temperatures must contain an adequate antifreeze liquid.

(E) Inspect jacks often enough to assure safe operation but at least:

(i) Once every 6 months for constant or intermittent use; or

(ii) Immediately after an abnormal load or shock.

(F) Mark defective jacks and do not use them until repairs are made.

(2) Abrasive blast cleaning nozzles. Blast cleaning nozzles must have an operating valve that must be held open manually. Provide a support on which the nozzle may rest when it is not in use.

(3) Hand-powered equipment.

(a) Each hand-powered hoist must have an effective brake or equivalent and a ratchet and pawl strong enough to hold the maximum load in any position.

(b) Do not allow hand crank handles to work loose from the drive shaft.

(4) Wheelbarrows, hand trucks, dollies, pallet jacks.

(a) Wheelbarrows, hand trucks, dollies and pallet jacks must be appropriate for the specific work. Do not load them beyond safe capacity. Bodies and frames must be metal or strong wood and able to withstand severe handling and the intended loads.

(b) Keep wheelbarrows, hand trucks, dollies and pallet jacks in good repair.

(c) Do not leave wheelbarrows, hand trucks, dollies, and pallet jacks where they can tip, fall or roll.

(5) Varmint killers (explosive gas and oxygen). A device for injecting a mix of propane (LPG) and oxygen into ground holes and then igniting it to kill varmints.

Note: OAR 437-004-0710 Compressed Gases apply to all cylinders of gas.

(a) Follow all manufacturer instructions for use and maintenance of this equipment or this standard, whichever is safest.

(b) When transporting these devices in vehicles (other than in the field of use), or when done using them for more than one hour, back out the regulator pressure control screws.

(c) Employees under 18 years old may not operate this equipment.

(d) Employers must train all employees to operate this equipment safely and according to the manufacturer's instructions and these rules.

(e) Operating procedures.

(A) Tanks, valves, couplings, regulators, hose, and apparatus must be free from oily or greasy substances. Do not handle oxygen tanks or apparatus with oily hands or gloves. Never allow a jet of oxygen to strike an oily surface, greasy clothes, or enter a fuel oil or other storage tank.

(B) Handling tanks.

(i) Unless tanks are secured on a special truck, remove regulators and install valve-protection caps, when provided, before moving tanks.

(ii) Close tank valves when work is done.

(iii) Close valves of empty tanks.

(iv) Do not use a hammer or wrench to open tank valves. If

(v) opening the valve by hand does not work, check with the supplier.

(vi) Do not repair or tamper with tank valves. Notify the supplier if you have trouble with a tank and follow their instructions as to its disposition.

(vii) Do not remove the stem from a diaphragm-type tank.

(C) Attachments and use.

(i) Fuel-gas tanks must have the valve end up when they are in use. Store and ship liquefied gases with the valve end up.

(ii) Before removing a regulator from a tank valve, close the tank valve and release the gas from the regulator.

(iii) Do not use regulators with cracked, broken, or defective parts.

(iv) Before attaching the regulator to a tank, fully release the regulators pressure adjusting screw.

(v) Close the tank valve and release the gas from the regulator before removing it from the tank.

Stat. Auth.: ORS 654.025(2) and 656.726(4).
Stats. Implemented: ORS 654.001 through 654.295.
Hist: OR-OSHA Admin. Order 4-1998, f/8/28/98, ef. 10/1/98.
OR-OSHA Admin. Order 9-2006, f. 9/22/06, ef. 9/22/06.

– END OF DOCUMENT –

TABLE OF CONTENTS

437-004-2310 General Requirements Q-1
(1) Scope Q-1
(2) Definition Q-1
(3) Fire prevention and protection Q-1
(4) Before beginning Q-1
(5) Welding or cutting containers Q-2
(6) Protection of personnel Q-2
(7) Health protection and ventilation Q-4

437-004-2350 Oxygen-Fuel Gas Welding and Cutting Q-7
(1) Scope Q-7
(2) General requirements Q-7
(3) Cylinders and containers Q-7

437-004-2400 Arc Welding and Cutting Q-13
(1) Scope Q-13
(2) Instruction Q-13
(3) Application of arc welding equipment Q-13
(4) Installation of arc welding equipment Q-14
(5) Operation and maintenance Q-14

437-004-2310 General Requirements.

(1) Scope. This subdivision applies to agricultural welding, except the following types for which Subdivision 2/Q applies:

Production type or amount of welding.

Welding in confined spaces like tanks, vats, pits, or those defined in Subdivision 4/J, OAR 437-004-1250(1). This section (4/Q) covers some confined space welding topics. In those cases, follow this section in addition to the rules in Subdivision 2/Q.

Welding with toxic or dangerous coatings or fluxes. This includes manganese, lead, zinc, cadmium, mercury, beryllium, or fluorine compounds.

Welding or heating galvanized materials.

(2) Definition.

Welder and welding operator is any operator of electric or gas welding and cutting equipment.

(3) Fire prevention and protection.

(a) Basic precautions. The basic precautions for fire prevention in welding or cutting work are:

(A) Fire hazards. Move either the object you are welding or cutting or any movable fire hazards in the area to a safe place.

(B) Guards. If you can move neither of the above, then use guards to confine the heat, sparks and slag to protect the immovable fire hazards.

(b) Special precautions. When the work falls within the scope of **(3)(a)(B)** above, additional precautions may be necessary:

(A) Combustible material. Wherever there are floor openings or cracks in the flooring, close them or take precautions so that sparks will not drop through to combustible materials on the floor below. Use the same precautions with cracks or holes in walls, open doorways and open or broken windows.

(B) Fire extinguishers. Keep appropriate fire extinguishing equipment ready for use.

(4) Before beginning. Before beginning, block portable equipment to prevent accidental movement.

(5) Welding or cutting containers.

(a) Clean first. Do not weld, use a torch or do abrasive cutting or other hot work on drums, barrels, tanks or other containers until they have been cleaned so that there are no flammable materials present or any substances that when subjected to heat, might produce flammable or toxic vapors. Disconnect and/or blank any pipe lines or connections to the drum or vessel.

(b) Test often. Use testing equipment prior to and frequently during the welding, torch or abrasive cutting or other hot work to insure that the container is free and remains free of flammable or toxic vapors.

(c) Vent and purge. Vent all hollow spaces, cavities or containers to air or allow gases to escape before preheating, cutting or welding.

(6) Protection of personnel.

(a) General.

(A) Cable. Put welding cable and other equipment so that it is clear of passageways, ladders and stairways.

(b) Eye protection.

(A) Selection.

(i) Use helmets or hand shields when arc welding or arc cutting, excluding submerged arc welding. Helpers or attendants must use proper eye protection.

(ii) Use goggles or other suitable eye protection when gas welding or oxygen cutting. Spectacles without side shields, with suitable filter lenses are acceptable for gas welding on light work, for torch brazing or for inspection.

(iii) All operators and attendants of resistance welding or resistance brazing equipment must use transparent face shields or goggles, depending on the particular job, to protect their faces or eyes.

(iv) Provide suitable goggles for brazing work not covered in (6)(b)(A)(i) through (6)(b)(A)(iii) above.

(B) Specifications for protectors.

(i) Helmets and hand shields must be an insulator for heat and electricity. Helmets, shields and goggles must not be flammable and must withstand sterilization.

(ii) Wear helmets and hand shields to protect the face, neck and ears from direct radiant energy from the arc.

(iii) "Lift front" welders' helmets must have a stationary safety glass on the inside of the frame next to the eyes to protect the welder from flying particles when the front is up. Where lens containers do not permit the use of safety glass, wear safety goggles.

(iv) When not using the "lift front" helmet with three glasses or when using the flat type helmet, wear other spectacle-type safety goggles in addition to the filter lens and cover glass.

(v) Use vented goggles to prevent fogging of the lenses as much as practicable.

(vi) Lenses must be tempered glass, substantially free from scratches, air bubbles, waves and other flaws.

(vii) Lenses must have permanent distinctive markings to show the source and shade.

NOTE: The following is a guide for the selection of the proper shade numbers. These recommendations may vary to meet the individual's needs.

Welding operation	Shade No.
Shielded metal-arc welding – 1/16-, 3/32-, 1/8-, 5/32-inch electrodes	11
Gas-shielded arc welding (nonferrous) – 1/16-, 3/32-, 1/8-, 5/32-inch electrodes	11
Gas-shielded arc welding (ferrous) – 1/16-, 3/32-, 1/8-, 5/32-inch electrodes	12
Shielded metal-arc welding:	
3/16-, 7/32-, 1/4-inch electrodes	12
5/16-, 3/8-inch electrodes	14
Atomic hydrogen welding	10-14
Carbon arc welding	14
Soldering	2
Torch brazing	3 or 4
Light cutting, up to 1-inch	3 or 4
Medium cutting, 1-inch to 6 inches	4 or 5
Heavy cutting, 6 inches and over	5 or 6
Gas welding (light) up to 1/8-inch	4 or 5
Gas welding (medium) 1/8-inch to 1/2-inch	5 or 6
Gas welding (heavy) 1/2-inch and over	6 or 8

Note: In gas welding or oxygen cutting where the torch produces a high yellow light, it is desirable to use a filter or lens that absorbs the yellow or sodium line in the visible light of the operation.

(viii) Filter lenses must meet the test for transmission of radiant energy prescribed by any of the consensus standards listed below:

(I) ANSI Z87.1-2003, "American National Standard Practice for Occupational and Educational Eye and Face Protection;"

(II) ANSI Z87.1-1989 (R-1998), "American National Standard Practice for Occupational and Educational Eye and Face Protection;" or

(III) ANSI Z87.1-1989, "American National Standard Practice for Occupational and Educational Eye and Face Protection."

NOTE: The Oregon OSHA Resource Center has copies for public review at 350 Winter Street NE, Salem OR 97309-0405.

(c) Protective clothing. Protect employees exposed to the hazards created by welding, cutting or brazing with personal protective equipment according to 4/I, OAR 437-004-1005.

(A) Material. Do not wear clothing that is easily ignited or highly flammable, like that made from synthetic materials.

(d) Work in confined spaces.

(A) General. Where a welder must enter a confined space, follow the rules for confined space work elsewhere in this Subdivision, 4/Q, and in 4/J, 437-004-1250.

(B) Ventilation. Ventilation is a prerequisite to work in confined spaces. For ventilation requirements see **OAR 437-004-2310(7)**.

(C) Securing cylinders and machinery. When welding or cutting is done in any confined space, the gas cylinders and welding machines must be left on the outside. Before starting, block heavy portable equipment wheels to prevent accidental movement.

(D) Electrode removal. When you stop arc welding for a period of time, like lunch or overnight, remove all electrodes from the holders and turn the machine off.

(E) Gas cylinder shutoff. When you stop gas welding or cutting for a period of time, like lunch or overnight, close the torch valves and shut off the gas supply to the torch at a point outside the confined area.

(7) Health protection and ventilation.

(a) General. Use general ventilation or a local exhaust system to keep the amount of toxic fumes, gases, or dusts below the limits in 4/Z, 437-004-9000.

(b) Ventilation for general welding and cutting.

(A) General. Use mechanical ventilation when welding or cutting on metals not covered in **(7)(e)** through **(7)(h)** below. (For specific materials, see the ventilation requirements of **(7)(e)** through **(7)(h)** below.)

(i) In a space of less than 10,000 cubic feet (284 m^3) per welder.

(ii) In a room having a ceiling height of less than 16 feet (5 m).

(iii) In confined spaces or where the welding space contains partitions, balconies or other structural barriers to the extent that they significantly obstruct cross ventilation.

(c) Local exhaust hoods and booths. Mechanical local exhaust ventilation may be by means of either of the following:

(A) Hoods. Place movable hoods as close as practical to the work and with enough airflow for a velocity in the direction of the hood of 100 linear feet (30 m) per minute in the welding zone. The rates of ventilation to get this control velocity using a 3-inch (7.6 cm) wide flanged suction opening are in the following table:

Welding zone	Minimum air flow[1] cubic feet/minute	Duct diameter, inches[2]
4 to 6 inches from arc or torch	150	3
6 to 8 inches from arc or torch	275	3 1/2
8 to 10 inches from arc or torch	425	4 1/2
10 to 12 inches from arc or torch	600	5 1/2

[1] When brazing with cadmium bearing materials or when cutting on such materials you may need increased rates of ventilation.
[2] Nearest half-inch duct diameter based on 4,000 feet per minute velocity in pipe.

(d) Ventilation in confined spaces.

(A) Air replacement. Ventilate all welding and cutting in confined spaces to prevent the build-up of toxic materials or possible oxygen deficiency. This applies not only to the welder but also to helpers and other people in the area. Air replacing the withdrawn air must be clean and respirable.

(B) Airline respirators. Where it is impossible to provide such ventilation, use airline respirators or hose masks approved by the Mine Safety and Health Administration and the National Institute for Occupational Safety and Health.

(C) Self-contained units. In areas immediately dangerous to life or health (IDLH), use self-contained breathing equipment. Use breathing equipment approved by the National Institute for Occupational Safety and Health.

(D) Outside helper. When welding in confined spaces and where welders and helpers use hose masks, hose masks with blowers or self-contained breathing equipment approved by the Mine Safety and Health Administration and the National Institute for Occupational Safety and Health, a worker must be on the outside of the confined space to insure the safety of those working within.

(E) Oxygen for ventilation. Never use oxygen for ventilation.

(e) Cleaning compounds.

(A) Manufacturer's instructions. In the use of cleaning materials, because of their possible toxicity or flammability, follow appropriate precautions such as manufacturer's instructions.

(B) Degreasing. Degreasing and other cleaning involving chlorinated hydrocarbons must be where no vapors will reach or be drawn into the atmosphere surrounding any welding operation. In addition, keep trichloroethylene and perchlorethalene out of atmospheres penetrated by the ultraviolet radiation of gas-shielded welding operations.

(f) Preservative coatings.

(A) Test first. Before welding, cutting or heating on any surface covered by a preservative coating whose flammability is unknown, a competent person must test to determine its flammability.

(B) Strip if needed. Prevent ignition of highly flammable hardened preservative coatings. When coatings are known to be highly flammable, strip them from the area to be heated to prevent ignition.

(g) Toxic preservative coatings.

(A) Enclosed spaces. In enclosed spaces, strip all surfaces covered with toxic preservatives of all toxic coatings for a distance of at least 4 inches from the area of heat application or the employees must use a respirator that protects them from toxic vapors.

(B) Strip if needed. Remove the preservative coatings a sufficient distance from the area to be heated to ensure that the temperature of the unstripped metal will not increase appreciably. Artificial cooling of the metal surrounding the heated area is acceptable to limit the size of the area you must clean.

(h) Cutting of stainless steels. Oxygen cutting, using either a chemical flux or iron powder or gas-shielded arc cutting of stainless steel, must include mechanical ventilation adequate to remove the fumes.

Stat. Auth.: ORS 654.025(2) and 656.726(4).
Stats. Implemented: ORS 654.001 through 654.295.
Hist: OR-OSHA Admin. Order 4-1998, f. 8/28/98, ef. 10/1/98.
OR-OSHA Admin. Order 2-2010, f. 2/25/10, ef. 2/25/10.

437-004-2350 Oxygen-fuel Gas Welding and Cutting.

(1) Scope. This subdivision applies to agricultural welding, except the following types for which Subdivision 2/Q applies:

Production type or amount of welding.

Welding in confined spaces like tanks, vats, pits, or those defined in 4/J, OAR 437-004-1250(1). This section (4/Q) covers some confined space welding topics. In those cases, follow this section in addition to the rules in 2/Q.

Welding with toxic or dangerous coatings or fluxes. This includes manganese, lead, zinc, cadmium, mercury, beryllium, or fluorine compounds.

Welding or heating galvanized materials.

(2) General requirements.

(a) Flammable mixture. Do not use any device or attachment, not approved for the purpose, that allows air or oxygen to mix with flammable gases prior to consumption, except at the burner or in a standard torch.

(b) Maximum pressure. Never generate (except in approved cylinder manifolds), pipe or use acetylene at a pressure in excess of 15 psig (103 kPa gauge pressure) or 30 psia (206 kPa absolute). (The 30 psia (206 kPa absolute) limit is to prevent unsafe use of acetylene in pressurized chambers such as caissons, underground excavations or tunnel construction.) This requirement does not apply to storage of acetylene dissolved in a suitable solvent in cylinders manufactured and maintained according to U.S. Department of Transportation requirements, or to acetylene for chemical use. Never use liquid acetylene for any purpose.

(c) Apparatus. Use only approved apparatus such as torches, regulators or pressure-reducing valves.

(3) Cylinders and containers.

(a) Approval and marking.

(A) DOT. All portable cylinders used for the storage and shipment of compressed gases must meet regulations of the U.S. Department of Transportation, 49 CFR parts 171-179.

(B) Markings. Compressed gas cylinders must have legible markings that identify the gas content. They must show either the chemical or the trade name of the gas. These markings must not be easily removable. If possible, the marking must be on the shoulder of the cylinder and conform to the American National Standard Method for Marking Portable Compressed Gas Containers to Identify the Material Contained, ANSI/CGA C-4, 1990.

(C) Connections. Compressed gas cylinders must have connections that comply with the American National Standard Compressed Gas Cylinder Valve Outlet and Inlet Connections, ANSI/CGA V-1, 1987.

(D) Protection cap. All cylinders with a water weight capacity of more than 30 pounds (13.6 kg) must have a means of connecting a valve protection cap or a collar or recess to protect the valve.

(b) Storage of cylinders, General.

(A) No heat. Keep cylinders away from radiators and other sources of heat.

(B) Inside storage. Inside buildings, store cylinders in a well-protected, well-ventilated, dry location, at least 20 feet (6.1 m) from highly combustible materials such as oil or excelsior. Locate storage spaces where cylinders will not be knocked over or damaged by passing or falling objects. Do not keep cylinders in unventilated enclosures such as lockers and cupboards.

(C) Empties. Empty cylinders must have their valves closed.

(D) Caps. Valve protection caps must always be in place, hand-tight, except when cylinders are in use or connected for use.

(E) Secure. Securely lash cylinders in place when necessary to prevent them from falling.

(c) Fuel-gas cylinder storage. Store acetylene cylinders valve end up.

(d) Oxygen cylinder storage.

(A) Oxygen storage. Do not store oxygen cylinders:

(i) Near highly combustible material, especially oil and grease;

(ii) Near reserve stocks of carbide and acetylene or other fuel-gas cylinders, or any other substance likely to cause or accelerate fire;

(B) Not near fuel cylinders. Separate stored oxygen cylinders from fuel-gas cylinders or combustible materials (especially oil or grease), by at least 20 feet (6.1 m) or by a noncombustible barrier at least 5 feet (1.5 m) high with a fire-resistance rating of at least 1/2-hour.

(e) Operating procedures.

(A) No oil or grease. Cylinders, cylinder valves, couplings, regulators, hose, and apparatus must be free from oily or greasy substances. Do not handle oxygen cylinders or apparatus with oily hands or gloves. Never allow a jet of oxygen to strike an oily surface, greasy clothes, or enter a fuel oil or other storage tank.

(B) Handling cylinders.

(i) Do not drop cylinders or allow them to strike each other.

(ii) Do not use valve-protection caps to lift cylinders from one vertical position to another. Do not use bars under valves or valve-protection caps to pry cylinders loose when frozen to the ground or otherwise fixed.

(iii) Unless cylinders are secured on a special truck, remove regulators and install valve-protection caps, when provided, before cylinders are moved.

(iv) Cylinders without fixed hand wheels must have keys, handles or non-adjustable wrenches on valve stems while they are in service. In multiple cylinder installations a single key or handle is acceptable for each manifold.

(v) Close cylinder valves before moving cylinders.

(vi) Close cylinder valves when work is done.

(vii) Close valves of empty cylinders.

(viii) Keep cylinders far enough away from the actual welding or cutting operation so that sparks, hot slag, or flame will not reach them. Otherwise, provide fire-resistant shields.

(ix) Do not set cylinders where they might become part of an electric circuit. Never tap an electrode against a cylinder to strike an arc.

(x) Do not use cylinders as rollers or supports, whether full or empty.

(xi) Do not use cylinders with altered or defaced numbers and markings.

(xii) Only the gas supplier may mix gases in a cylinder. Only the owner of the cylinder or person authorized by them, may refill a cylinder.

(xiii) Do not allow anybody to tamper with safety devices in cylinders or valves.

(xiv) Do not drop or roughly handle cylinders.

(xv) Unless connected to a manifold, do not use oxygen from a cylinder without first attaching an oxygen regulator to the cylinder valve. Before connecting the regulator to the cylinder valve, open the valve slightly for an instant and then close it. Always stand to one side of the outlet when opening the cylinder valve.

(xvi) Do not use a hammer or wrench to open cylinder valves. If opening the valve by hand does not work, notify the supplier.

(xvii)

(I) Do not repair or tamper with cylinder valves. Notify the supplier if you have trouble with a cylinder and follow their instructions as to its disposition.

(II) Do not remove the stem from a diaphragm-type cylinder.

(C) Attachments and use.

(i) Fuel-gas cylinders must have the valve end up when they are in use. Store and ship liquefied gases with the valve end up.

(ii) Before connecting a regulator to a cylinder valve, open the valve slightly and then close it immediately. Never crack a fuel-gas cylinder valve near other welding work or near sparks, flame, or other possible sources of ignition.

(iii) Before removing a regulator from a cylinder valve, close the cylinder valve and release the gas from the regulator.

(iv) There can be nothing on top of an acetylene cylinder when in use that may damage the safety device or interfere with the quick closing of the valve.

(v) If closing the valves will not stop leaks in cylinders and attachments, take them outdoors away from sources of ignition and allow them to slowly empty.

(vi) Put a warning near cylinders with leaking fuse plugs or other leaking safety devices. It must warn employees not to approach them with a lighted cigarette or other source of ignition. Plainly tag the cylinder and notify the supplier. Follow their instructions.

(vii) Do not tamper with safety devices.

(viii) Never use fuel-gas from cylinders through torches or other devices with shutoff valves without reducing the pressure through a suitable regulator attached to the cylinder valve or manifold.

(ix) Always open the cylinder valve slowly.

(x) Do not open an acetylene cylinder valve more than one and one-half turns of the spindle, and preferably no more than three-fourths of a turn.

(xi) If a cylinder takes a special wrench, leave it in position on the stem of the valve while the cylinder is in use. For manifolded or coupled cylinders, at least one such wrench must always be available for immediate use.

(xii) Do not use regulators with cracked, broken, or defective parts.

(xiii) Inspect union nuts and connectors on regulators before use. Do not use those with faulty seats.

(xiv) Before attaching the regulator to a cylinder, fully release the regulator's pressure adjusting screw.

(xv) Close the cylinder valve and release the gas from the regulator before removing it from the cylinder.

(D) Blowpipes and torches.

(i) Approved backflow preventer or flashback preventers must be between the blowpipe or torch and the hoses.

(ii) Use only friction lighters, stationary pilot flames or other recognized sources of ignition to ignite torches. Do not use matches or other hand held open flames.

(iii) When welding or cutting stops for an extended period of time, for example, during the lunch break, overnight or longer:

(I) Close the oxygen and fuel-gas cylinder or manifold valves;

(II) Open torch valves momentarily to release all gas pressure from the hoses and then close them;

(III) Release the regulator pressure adjusting screws; and

(IV) When the welding or cutting stops for a few minutes, closing only the torch valves is acceptable.

(iv) Follow the manufacturer's procedures for the sequence of operations in lighting, adjusting, and extinguishing blowpipe flames and connecting to the gas supply.

(v) Use a suitable cylinder truck, chain or steadying device to secure cylinders while in use.

(vi) Post signs conspicuously in fuel-gas storage areas. They must say, "DANGER – NO SMOKING, MATCHES OR OPEN LIGHTS," or equivalent wording.

(vii) Acetylene gas must not contact unalloyed copper except in a blowpipe or torch.

(viii) Do not use oxygen in pneumatic tools, in oil preheating burners, to start internal-combustion engines, to blow out pipelines, to “dust” clothing or work, to create pressure, or for ventilation.

(ix) After connecting welding or cutting apparatus to oxygen and fuel-gas cylinders, or when starting to reuse the apparatus after 1/2-hour or more, let each gas flow through its respective hose separately for a few seconds to purge the hose of any mixture of gases.

(x) Never put down a torch unless the oxygen and fuel-gas have been completely shut off at the torch.

NOTE: Regulation of manifolds, piping systems, acetylene generators and calcium carbide are found in Division 2, 1910.253.

Stat. Auth.: ORS 654.025(2) and 656.726(4).
Stats. Implemented: ORS 654.001 through 654.295.
Hist: OR-OSHA Admin. Order 4-1998, f/8/28/98, ef. 10/1/98.

437-004-2400 Arc Welding and Cutting.

(1) Scope. This subdivision applies to agricultural welding, except the following types for which Subdivision 2/Q applies:

Production type or amount of welding.

Welding in confined spaces like tanks, vats, pits, or those defined in 4/J, OAR 437-004-1250(1). This section (4/Q) covers some confined space welding topics. In those cases, follow this section in addition to the rules in 2/Q.

Welding with toxic or dangerous coatings or fluxes. This includes manganese, lead, zinc, cadmium, mercury, beryllium, or fluorine compounds.

Welding or heating galvanized materials.

(2) Instruction. Only trained and qualified workers will be allowed to run arc welding equipment.

(3) Application of arc welding equipment.

(a) General. Equipment that complies with the Requirements for Electric Arc-Welding Apparatus, NEMA EW-1-1983, National Electrical Manufacturers Association or the Safety Standard for Transformer-Type Arc-Welding Machines, ANSI/UL 551, 1993, Underwriters' Laboratories assures consideration of safety in design.

(b) Voltage. Do not exceed the following limits:

(A) Alternating-current machines.

(i) Manual arc welding and cutting – 80 volts.

(ii) Automatic (machine or mechanized) arc welding and cutting – 100 volts.

(B) Direct-current machines.

(i) Manual arc welding and cutting – 100 volts.

(ii) Automatic (machine or mechanized) arc welding and cutting – 100 volts.

(C) Special processes. When special welding and cutting processes require higher open circuit voltages than those above, there must be a way to prevent the operator from making accidental contact with the high voltage.

(4) Installation of arc welding equipment.

(a) General. Installation including power supply must be according to the requirements of Subdivision **4/S**.

(b) Grounding. Ground the frame or case of the welding machine (except engine-driven machines) according to Subdivision **4/S**.

(5) Operation and maintenance.

(a) Machine hook up. Before starting operations check all connections to the machine to make certain they are properly made. The work lead must be firmly attached to the work; magnetic work clamps must be free from adherent metal particles of spatter on contact surfaces. Coiled welding cable must be spread out before use to avoid serious overheating and damage to insulation.

(b) Grounding. Check the grounding of the welding machine frame. Give special attention to safety ground connections of portable machines.

(c) Manufacturers' instructions. Follow the printed rules and instructions supplied by the manufacturer.

(d) Electrode holders. When not in use place electrode holders so they cannot make electrical contact with persons, conducting objects, fuel or compressed gas tanks.

(e) Electric shock. Do not use cables with splices within 10 feet (3 m) of the holder.

(f) Damage. Do not use work lead cables or electrode lead cables with damaged insulation or exposed conductors.

(g) Cable. Do not coil or loop the electrode cable around your body.

Stat. Auth.: ORS 654.025(2) and 656.726(4).
Stats. Implemented: ORS 654.001 through 654.295.
Hist: OR-OSHA Admin. Order 4-1998, f/8/28/98, ef. 10/1/98.

– END OF DOCUMENT –

TABLE OF CONTENTS

437-004-2810 General Requirements S-1

437-004-2850 Temporary Lighting and Wiring S-2
Temporary Wiring S-2
Temporary Lighting S-3

437-004-2860 Flexible Cable and Extension Cords S-3

437-004-2870 Attachment Plugs and Receptacles S-4

437-004-2880 Cord and Plug-Connected Equipment S-5

437-004-2900 Grounding and Bonding S-6

437-004-2950 Switches and Circuit Breakers S-7

437-004-3000 Identification and Load Ratings S-8

437-004-3050 Work Near Overhead Lines S-8
Clearance or Safeguards Required S-8
Warning Sign Required S-9
Notification to Power Company and Responsibility for Safeguards S-9

437-004-3075 Agricultural Buildings with Special Hazards S-9
(1) Scope S-9
(2) Wiring S-9
(3) Enclosures S-10
(4) Motors and machines S-10
(5) Lighting fixtures S-10

437-004-2810 General Requirements.

(1) Scope. This standard (4/S) covers electrical work and equipment in buildings and on premises. It applies to all work and equipment covered by other sections of Subdivision 4/S.

(2) Unless stated otherwise in OAR 437-004-2810 through 437-004-3075, all electrical work, equipment and systems must comply with standards under the jurisdiction of the Oregon Building Codes Division, Department of Consumer and Business Services.

(3) Do not allow employees to work near live power sources without protection from shock.

(4) Isolate exposed live electrical conductors from contact by persons or equipment.

NOTE: Paragraphs **(3)** and **(4)** above do not apply to electric fences or containment devices.

(5) Lights 7 feet or closer to the floor or work surface must have a guard, fixture or holder to protect the bulb or tube from breakage.

(6) Only qualified persons, authorized by the employer may make electrical repairs. (See Subdivision 4/B.)

(7) Install or remove fuses from live terminals only with special tools insulated for the voltage.

(8) When the exact location of underground electric power lines is unknown, workers using jackhammers, bars or other hand tools that may contact a line must use insulated protective gloves.

(9) Before beginning work near exposed lines or equipment, the employer must determine if they are live. If they are, you must advise the employees of the position of the lines, the hazards involved and the protective measures they must use.

(10) Before beginning work like digging, drilling or remodeling, that may lead to hidden power sources the employer must locate them and determine their voltage. Locate underground lines by calling 1-800-332-2344 or in the Portland Metropolitan area 246-6699. The employer must then:

(a) Post and maintain proper warning signs where such circuits exist; and

(b) Advise the employees of the position of the lines, the hazards involved and the protective measures they must use.

NOTE: If the work covered by **(8)** and **(9)** above might involve voltages over 750v, see OAR 437-004-3050.

(11) There must be sufficient space near electrical equipment to permit safe operation and maintenance.

(a) Near exposed parts, the minimum clearance from floor to ceiling must be at least 76 inches. There must be a clear radius of at least 36 inches in front of the panel.

(b) There must be enough clearance to permit at least a 90 degree opening of all doors or hinged panels.

(c) Do not store anything in front of electrical panels.

(12) There must be suitable barriers or other means to ensure that work space for electrical equipment is not used as a passageway when energized parts are exposed.

(13) Require workers to report all electric shocks to management or supervisors immediately.

(a) Check the equipment causing the shock and remove from service or repair it before further use.

(14) Electrical equipment must be free from recognized hazards that may cause death or serious physical harm. Use the criteria below to determine the safety of equipment.

(a) Electrical equipment must be listed or labeled, except custom-made components and utilization equipment. (See Division 4/B, OAR 437-004-0100, for definitions of listed and labeled.)

(b) Mechanical strength and durability, and for parts that enclose and protect other equipment, the adequacy of the protection.

(c) Classification by type, size, voltage, current capacity or specific use.

(d) Other factors that contribute to the practical safeguarding of employees using or likely to contact the equipment.

(15) Follow manufacturer's instructions or recommendations when installing listed or labeled equipment.

(16) In wet or damp locations, use only fixtures approved for that purpose. Install them so that water cannot enter or accumulate in wireways, lampholders, or other electrical parts.

(17) All pull boxes, junction boxes and fittings must have approved covers. Metal covers must be grounded.

(18) All wall plugs and switches must have approved, unbroken covers or faceplates and no broken parts.

(19) Receptacles, plugs, fixtures, lamp-holders lamps and other holders and outlets must have no exposed live parts.

NOTE: Rosettes and cleat-type lamp-holders may have exposed parts if they are 8 feet or higher above the floor.

Stat. Auth.: ORS 654.025(2) and 656.726(4).
Stats. Implemented: ORS 654.001 through 654.295.
Hist: OR-OSHA Admin. Order 4-1998, f/8/28/98, ef. 10/1/98.
OR-OSHA Admin. Order 9-2006, f. 9/22/06, ef. 9/22/06.

437-004-2850 Temporary Lighting and Wiring.

Temporary Wiring

(1) Walkways and similar locations must be kept clear of power cords.

(2) Ground all temporary wiring.

(3) Keep wiring equipment as vapor, dust, or fiber tight as intended by the manufacturer. There must be no loose or missing screws, gaskets, threaded connections, or other impairments to this tight condition.

(4) Take precautions to make open wiring inaccessible to unauthorized personnel.

(5) Temporary electrical power and lighting installations are acceptable during construction, remodeling, maintenance, repair, or demolition of buildings, structures, equipment, or similar activities.

(6) Temporary electrical power and lighting installations are acceptable for not more than 90 days for decorative lighting and as in **(5)** above.

Temporary Lighting

(7) Temporary lights must be at least 7 feet above the work surface or have guards to prevent contact with the bulb.

(8) Temporary lights must have electric cords, connections and insulation rated for their use.

(9) Do not suspend temporary lights by their cords unless the manufacturer's instructions allow the practice.

(10) Do not use metal shell, paper lined portable hand lamp holders. Hand lamps must have a handle and a substantial guard over the bulb.

(11) Portable extension lamps used where flammable vapors, gases, combustible dusts, easily ignitible fibers or flyings are present, must be approved for the type of hazard involved. Do not modify, repair or add to these systems without approval of the manufacturer.

Stat. Auth.: ORS 654.025(2) and 656.726(4).
Stats. Implemented: ORS 654.001 through 654.295.
Hist: OR-OSHA Admin. Order 4-1998, f/8/28/98, ef. 10/1/98.

437-004-2860 Flexible Cable and Extension Cords.

(1) Extension cords used with portable electric tools and appliances must be at least three-wire type and have an approved grounding plug and receptacle providing ground continuity.

(2) Use only extension cords rated for the intended use.

(3) Do not use worn or frayed electric cords and cables.

(4) Protect flexible cables and extension cords against damage caused by traffic, sharp corners, pinching or projections.

(5) Cover or elevate cables that pass through work areas to protect them from damage.

(6) Do not use staples to fasten flexible cables and extension cords. Do not hang them from nails or suspend them by wire.

(7) Do not use flexible cables and extension cords as a substitute for fixed structural wiring.

(8) Flexible cables and extension cords must not run through holes in walls, ceilings, or floors or through doorways, windows, or similar openings, except during construction.

(9) Electrical conductors must be spliced or joined in splicing devices suitable for the use, by brazing, welding or soldering with a fusible metal or alloy.

(a) Secure soldered splices first mechanically and electrically without solder, then solder. (Use rosin-core solder, NOT acid core solder, when joining electrical conductors.)

(b) Insulation on splices and joints and the free ends of conductors must be equivalent to the original insulation.

(c) Splices for flexible cords must provide flexibility and use characteristics of the original cord. Vulcanized splices or equivalent means, such as shrinkable materials, are acceptable for repairs.

(10) Do not plug extension cords together to make them longer unless the resultant cord is rated to carry the load.

Stat. Auth.: ORS 654.025(2) and 656.726(4).
Stats. Implemented: ORS 654.001 through 654.295.
Hist: OR-OSHA Admin. Order 4-1998, f/8/28/98, ef. 10/1/98.

437-004-2870 Attachment Plugs and Receptacles.

(1) Attachment plugs must be heavy enough to endure rough use and have a suitable cord grip to prevent strain on the terminal screws.

(2) Use only approved, grounding type attachment plugs.

(3) Use only approved concealed contact type receptacles for attachment plugs. They must extend ground continuity. They must allow removal of the plug without exposing live parts to contact.

(4) Polarized attachment plugs, receptacles and cord connectors must have proper continuity.

(5) Use only attachment plugs, receptacles and cord connectors that have the grounded (common) terminal conductor identified. If the terminal is not visible, the connection hole must be marked with the word “white.”

(6) The terminal for the equipment grounding conductor (bare wire) must have:

(a) A green colored, not easily removable terminal screw with hexagonal head; or

(b) A green colored, hexagonal, not easily removable terminal nut; or

(c) A green colored pressure wire connector.

(d) If the terminal for the grounding conductor is not visible, mark the conductor entrance hole with the word “green” or otherwise identify it with the color green.

(e) A grounded conductor must not be attached to any terminal or lead to reverse the designated polarity.

(7) Where portable cords supply different voltages or types of current (A.C. or D.C.) receptacles and attachment plugs must not be interchangeable.

(8) Attachment plugs or other connectors supplying equipment at more than 300 volts must have skirts or otherwise confine arcs.

(9) Do not use a grounding terminal or grounding-type device on a receptacle, cord connector, or attachment plug for purposes other than grounding.

Stat. Auth.: ORS 654.025(2) and 656.726(4).
Stats. Implemented: ORS 654.001 through 654.295.
Hist: OR-OSHA Admin. Order 4-1998, f/8/28/98, ef. 10/1/98.

437-004-2880 Cord and Plug-connected Equipment.

(1) Portable or plug-connected equipment with noncurrent-carrying metal parts must be grounded.

(2) It is not necessary to ground portable tools and appliances with approved double insulation, or its equivalent, but they must have distinctive markings.

(3) Ground exposed noncurrent-carrying metal parts of fixed electrical equipment, including motors, frames, electrically driven machinery, refrigerators, freezer, electric ranges, clothes dryers, etc.

(4) Cord and plug-connected high-pressure spray washing machines must have a factory installed ground-fault circuit interrupter that is an integral part of the attachment plug or is in the supply cord within 12 inches of the attachment plug.

(5) Enclose or separate parts of electric equipment that in ordinary operation produces arcs, sparks, flames, or molten metal. Isolate this equipment from all combustible material.

(6) Do not use electrical equipment without descriptive markings that identify the approving organization (such as U.L.) for the product. Other markings that give voltage, current, wattage, or other ratings as necessary must also be visible.

Stat. Auth.: ORS 654.025(2) and 656.726(4).
Stats. Implemented: ORS 654.001 through 654.295.
Hist: OR-OSHA Admin. Order 4-1998, f/8/28/98, ef. 10/1/98.

437-004-2900 Grounding and Bonding.

(1) The path from circuits, equipment, structures, and conduit enclosures to ground must be permanent and continuous with enough capacity to conduct safely the currents that might be imposed on it. The path must also have impedance low enough to limit the potential above ground and to result in the operation of the over current devices in the circuit.

(2) Driven ground rods must, where practicable, have a resistance to ground not to exceed 25 ohms. Where the resistance is not as low as 25 ohms, use two or more electrodes connected in parallel.

(3) Check grounding circuits to ensure that the circuit between the ground and the grounded power conductor has a resistance low enough to permit enough current to flow to cause the fuse or breaker to interrupt the circuit.

(4) Conductors used for bonding and grounding stationary and moveable equipment must be able to carry the anticipated current.

(5) Outside conductors, 600 volts, nominal or less. Paragraphs **(a)**, **(b)**, **(c)**, and **(d)** below apply to branch circuit, feeder, and service conductors rated 600 volts, nominal, or less and run outdoors as open conductors. Paragraph **(e)** below applies to lamps installed under these conductors.

(a) Conductors on poles must provide a horizontal climbing space not less than the following:

(A) Power conductors below communication conductors – 30 inches.

(B) Power conductors alone or above communication conductors: 300 volts or less – 24 inches; more than 300 volts – 30 inches.

(b) Clearance from ground to open conductors must conform to the following minimum clearances:

(A) 10 feet above finished grade, sidewalks, or from any platform or projection from which they might be reached.

(B) 12 feet over areas subject to vehicle traffic other than truck traffic.

(C) 15 feet over areas other than those in paragraph **(5)(b)(D)** below, where there may be truck traffic.

(D) 18 feet over public streets, alleys, roads, and driveways.

(c) Conductors must have a clearance of at least 3 feet from windows, doors, porches, fire escapes, or similar locations. Conductors run above the top level of a window do not have to be 3 feet away.

(d) Conductors must have a clearance of not less than 8 feet from the highest point of roofs over which they pass, except that:

(A) Where the voltage between conductors is 300 volts or less and the roof has a slope of not less than 4 inches in 12, the clearance from roofs must be at least 3 feet, or

(B) Where the voltage between conductors is 300 volts or less and the conductors do not pass over more than 4 feet of the overhang portion of the roof and they terminate at a through-the-roof raceway or approved support, the clearance from roofs must be at least 18 inches.

(e) Lamps for outdoor lighting must be below all live conductors, transformers, or other electric equipment, unless the equipment has a disconnecting means that is lockable in the open position or unless there are adequate clearances or other safeguards for lamp replacement.

Stat. Auth.: ORS 654.025(2) and 656.726(4).
Stats. Implemented: ORS 654.001 through 654.295.
Hist: OR-OSHA Admin. Order 4-1998, f/8/28/98, ef. 10/1/98.

437-004-2950 Switches and Circuit Breakers.

(1) There must be at least 3 feet of clear space in front of switch centers or panels. Passageways to switch centers or panels must be unobstructed.

(2) There must be enclosures or screens around live parts of electrical switchboards and panelboards.

(3) Each disconnecting means for motors and appliances, and each service feeder or branch circuit at the point where it originates, must have legible markings to indicate their purpose unless the purpose is evident.

(4) Locate or shield disconnecting means to avoid injury to employees. Do not use open knife switches.

(5) Securely mount boxes for disconnecting means and keep their covers in place.

(6) Boxes and disconnecting means in damp or wet locations must be waterproof.

(7) There must be sufficient light for all indoor working spaces around service equipment, switchboards, panelboards, and motor control centers.

(8) The minimum headroom of working spaces around service equipment, switchboards, panelboards, or motor control centers must be 6 feet 3 inches.

Stat. Auth.: ORS 654.025(2) and 656.726(4).
Stats. Implemented: ORS 654.001 through 654.295.
Hist: OR-OSHA Admin. Order 4-1998, f/8/28/98, ef. 10/1/98.

437-004-3000 Identification and Load Ratings.

(1) Name plates, rating data, and marks of identification on electrical equipment and electrically operated machines must be present and legible.

(2) Do not change the circuit protection in existing installations to increase the load to more than the load rating of the circuit wiring.

(3) Do not allow tampering, bridging, or using oversize fuses. Require workers to report immediately to management or a qualified electrician, any fuses or breakers that blow repeatedly.

(4) Do not attempt to restart electric motors that kick out repeatedly.

Stat. Auth.: ORS 654.025(2) and 656.726(4).
Stats. Implemented: ORS 654.001 through 654.295.
Hist: OR-OSHA Admin. Order 4-1998, f/8/28/98, ef. 10/1/98.

437-004-3050 Work Near Overhead Lines.

Clearance or Safeguards Required

Note: High voltage is 750 v or higher.

(1) Isolate exposed overhead conductors from contact by persons or equipment.

(2) Do not store irrigation pipe within 100 feet of overhead high voltage conductors.

(3) Do not allow upending if irrigation pipe is within 100 feet of overhead conductors.

(4) Do not set up or operate any part of a water or irrigation system, or any other device that discharges a conductive liquid, so that the discharge is toward or may come within 10 feet of overhead high-voltage lines or any other exposed electric conductor.

(5) Do not require or permit an employee to pass or work near high-voltage lines, unless you effectively guard against danger from contact.

(6) No work activity may bring workers or equipment within 10 feet of high-voltage lines.

(7) Do not operate equipment or machines near power lines except:

(a) When electrical distribution and transmission lines are deenergized and visibly grounded at the point of work or where insulating barriers are in place to prevent physical contact with the lines;

(b) For lines rated 50 kV. or below, minimum clearance between the lines and any part of the object must be 10 feet;

(c) For lines rated more than 50 kV. minimum clearance between the lines and any part of the object must be 10 feet plus 0.4 inches for each 1 kV., more than 50 kV., or twice the length of the line insulator but never less than 10 feet.

(d) In transit, the clearance must be a minimum of 4 feet for voltages less than 50 kV., 10 feet for voltages more than 50 kV. up to and including 345 kV., and 16 feet for voltages up to and including 750 kV.

(e) A person must observe clearances and give timely warning for all work where it is difficult for the operator to maintain the desired clearance by sight.

Warning Sign Required

(8) The employer must post and keep in plain view of the operator on each derrick, power shovel, drilling rig, hay loader, hay stacker or similar apparatus, any part of which is capable of vertical, lateral or swinging motion, a warning sign legible at 12 feet reading “Unlawful to operate this equipment within 10 feet of high-voltage lines.”

Notification to Power Company and Responsibility for Safeguards

(9) When any work may be within 10 feet of any high-voltage line, the person or persons responsible for the work must promptly notify the power company and is responsible for the completion of required safety measures before beginning the work.

Stat. Auth.: ORS 654.025(2) and 656.726(4).
Stats. Implemented: ORS 654.001 through 654.295.
Hist: OR-OSHA Admin. Order 4-1998, f/8/28/98, ef. 10/1/98.

437-004-3075 Agricultural Buildings with Special Hazards.

(1) Scope. These standards apply to the following agricultural buildings or parts of buildings or adjacent areas.

(a) Agricultural buildings where excessive dust and dust with water may accumulate. This includes all areas of poultry, livestock and fish confinement systems, where litter dust or feed dust, including mineral feed particles may accumulate.

(b) Agricultural buildings where a corrosive atmosphere exists. This includes areas where poultry and animal excrements may cause corrosive vapors; corrosive particles may combine with water; the area is damp and wet due to periodic washing for cleaning and sanitizing with water and cleansing agents; or where similar conditions exist.

(2) Wiring. Use types UF, NMC, copper SE, or other cables or raceways suitable for the location, with approved termination fittings. Secure all cables within 8 inches of each cabinet, box, or fitting.

(3) Enclosures. Boxes, fittings, wiring devices, switches, circuit breakers, controllers and fuses including push-buttons, relays, and similar devices must have enclosures as in **(a)** and **(b)** below.

(a) Buildings with excessive dust and dust with water must use suitable enclosures.

(b) Buildings with a corrosive atmosphere must use suitable enclosures for those conditions.

(4) Motors and machines. Motors and other rotating electrical machinery must be totally enclosed or designed to minimize the entrance of dust, moisture, or corrosive particles.

(5) Lighting fixtures. Install lighting fixtures to minimize the entrance of dust, foreign matter, moisture and corrosive material.

(a) Guard lighting fixtures exposed to physical damage.

(b) Lighting fixtures exposed to water must be watertight.

Stat. Auth.: ORS 654.025(2) and 656.726(4).
Stats. Implemented: ORS 654.001 through 654.295.
Hist: OR-OSHA Admin. Order 4-1998, f/8/28/98, ef. 10/1/98.

– END OF DOCUMENT –

TABLE OF CONTENTS

437-004-3100 Excavation T-1
(1) Definition T-1
(2) Five feet or more T-1
(3) Less than 5 feet T-1
(4) Strength T-1
(5) Design T-1
(6) Follow instructions T-1
(7) System size T-1
(8) Sloping T-1
(9) Access/Exit T-1
(10) Water T-1
(11) Inspect daily T-1
(12) Spoils and equipment T-2

437-004-3100 Excavation.

(1) Definition.

Excavation – A man-made cut, hole, pit, trench or depression in the earth.

NOTE: Before any digging you must comply with Oregon's "Call Before You Dig" law. Call 1-800-332-2344.

(2) Five feet or more. Employees must not enter any excavation 5 feet or deeper unless protective systems are in place to protect from cave-in or sloughing.

(3) Less than 5 feet. Employees must not enter any excavation less than 5 feet deep when the sides are losing their shape, are loose or show other signs of being unstable unless protective systems are in place to protect from cave-in or sloughing.

(4) Strength. Systems installed in the excavation must be strong enough and engineered to provide protection from hazards of the particular excavation.

(5) Design. Systems must be as follows:

(a) Designed by a registered professional engineer.

(b) Designed using the manufacturer's or other tabulated data.

(6) Follow instructions. When using manufactured systems, follow the instructions and do not exceed the limitations of the system.

(7) System size. Systems must extend from the bottom of the excavation to at least the top edge.

(8) Sloping. Sloping is an acceptable system to protect workers. Sloping must be at a ratio of at least 1 1/2 to 1. That means a horizontal setback of 1 1/2 feet for every 1-foot of trench depth.

(9) Access/Exit. There must be a safe way, such as a ladder or steps, to get into and out of excavations 4 or more feet deep. In trenches, these exits must be at least every 25 linear feet.

(10) Water. Workers will not enter excavations where there is accumulating water, either from ground seepage or surface run-off, unless there are adequate protections from hazards caused by the water.

(11) Inspect daily. A person familiar with these rules and the work must inspect all excavations daily, before workers enter or reenter.

(12) Spoils and equipment. Keep soil and material removed from the excavation (spoils) at least two feet away from the edge of the excavation or restrained. Equipment that could roll or fall into the excavation must also be at least two feet back or restrained.

Stat. Auth.: ORS 654.025(2) and 656.726(4).
Stats. Implemented: ORS 654.001 through 654.295.
Hist: OR-OSHA Admin. Order 4-1998, f/8/28/98, ef. 10/1/98.
OR-OSHA Admin. Order 9-2006, f. 9/22/06, ef. 9/22/06.

– END OF DOCUMENT –

TABLE OF CONTENTS

437-004-3410 Agricultural, Commercial and Industrial Vehicles U-1
(1) Scope U-1
(2) Definitions U-1
(3) General requirements U-1
(4) Vehicle components U-3
(5) Inspection, testing, maintenance, and repair U-5
(6) Transportation of workers U-5
(7) Fueling U-6
(8) Hauling of gasoline and other flammables U-6
(9) Warning devices U-7
(10) Control of exhaust gases U-7
(11) Safety equipment – vehicles operated on public roads U-7

Appendix A to 437-004-3410, Specific Equipment U-9

437-004-3420 Working from Vehicles and Vehicle Loads U-11
(1) Riding on loads U-11
(2) Field operations U-11
(3) Load stability U-11
(4) Access to the load U-11

437-004-3430 Training for Agriculture Tractor Operators U-11
(1) Training U-11

437-004-3460 Industrial Vehicles U-12
(1) Modifications U-12
(2) Nameplates and markings U-12
(3) Capacity markings U-12

437-004-3480 Bridges, Roads and Ramps U-12
(1) Application U-12
(2) Roads U-12
(3) Bridges, runways and ramps U-12

437-004-3550 Servicing Multipiece and Single Piece Rim Wheels U-13

437-004-3600 Roll-Over Protective Structures (ROPS) for Tractors in Agriculture U-13
(1) Definitions U-13
(2) General requirements U-14
(3) Seat belts U-15
(4) Protection from sharp surfaces U-16
(5) Exempted uses U-16
(6) Remounting U-16
(7) Labeling U-16

437-004-3650 Roll-Over Protective Structures – Industrial Vehicles U-17
(1) Application U-17
(2) ROPS – general requirements U-17
(3) Defects U-17
(4) Identification of ROPS U-18
(5) Approved structures U-18

437-004-3660 Vehicle-Mounted Elevating and Rotating Work Platforms U-18
(1) Definitions U-18
(2) Design requirements U-18
(3) Specific requirements U-19
(4) Working near overhead high voltage lines U-19

437-004-3410 Agricultural, Commercial and Industrial Vehicles.

(1) Scope. This applies to all motor vehicles used by employees.

(2) Definitions.

Agricultural vehicle – A vehicle specifically designed or modified for use exclusively in agricultural operations, and not licensed for use on public roads under Oregon laws.

NOTE: Included in this definition is farm field equipment such as tractors, harvesters, planters or any combination thereof; unlicensed trucks and wagons or trailers such as feeder trucks or wagons and specialized crop handling vehicles; and mobile elevating and rotating work platforms such as orchard aerial lift devices.

Commercial-type vehicles – Motor vehicles primarily for the transportation of persons or material on roads.

Commercial type vehicles used to transport workers are:

Class 'A' vehicle – A bus type vehicle or van that can carry 12 or more workers; or the "work crew" vehicle built or altered for carrying passengers.

Class 'B' vehicle – A vehicle or van especially built for transporting work crews in compart- ments separate from the space used to transport supplies, tools and equipment.

Class 'C' vehicle – A flatbed, pickup body or dump truck type vehicle, or vehicle of similar open body construction.

Class 'D' vehicle – A passenger car or station wagon type.

NOTE: Typically a bus type vehicle has two axles and six tires or three or more axles. This does not include vans.

Industrial-type vehicles – Vehicles designed for non-highway use, primarily for pulling trailers or other mobile loads, straddle trucks such as lumber carriers, power industrial trucks, and other types of vehicles especially designed for handling materials.

NOTE: When this rule uses "vehicle" by itself, it includes all the above definitions.

(3) General requirements.

(a) Operation of vehicles.

(A) Nobody may operate any unsafe vehicle. Fix unsafe conditions before using it.

(B) Only trained and authorized employees may operate any vehicle.

(C) Only the operator may ride on vehicles unless there are safe riding facilities for additional riders. Persons are never to ride on fenders, axles, hitches, tongues, buckets, forks, drawbars or any other area not intended to carry passengers.

(D) Do not drive a vehicle up to anyone who is in front of a stationary object.

(E) The operator must look in the direction of travel, and have a clear view of the path of travel, unless guided by a signal person with a clear view of the route.

(F) Except when using a towbar, keep manual control over vehicles under tow.

(G) Do not stand or walk under an elevated part of a vehicle whether loaded or empty unless it is blocked or cribbed according to **OAR 437-004-3410(5)(d)**.

(H) Workers may not be under loads or units of materials during movement.

(I) Do not overload any vehicle. Keep loads stable and well balanced.

(J) Employees must not ride in a loaded or partially loaded cargo space while the vehicle is moving unless the load is adequately shored, braced, or otherwise secured.

(K) Do not drive a vehicle with an unstable or insecure load.

(L) Block the wheels and set the brakes when loading Agricultural Vehicles, Class C, Commercial –Type Vehicles and Industrial-Type Vehicles who's movement might cause a hazard. This does not apply when loading "on the go."

(M) The parking brake must be set on parked commercial and industrial vehicles. Block or turn to a curb the wheels of vehicles parked on an incline.

(N) Do not put arms or legs between working parts or outside the running lines of vehicles.

(O) Vehicles must have a safe way of access and exit.

(P) Do not jump on or off moving vehicles.

(Q) There must be no stunt driving or horseplay.

NOTE: Appendix A is a reprint of Oregon Revised Statutes that govern the use of some agricultural vehicles and equipment on public highways and roads. While Oregon OSHA has the legal authority to cite these sections, law enforcement officers are the usual source of enforcement. We offer these laws here as a courtesy to Oregon agricultural employers and in the interest of employee safety.

(b) Hauling of explosives. Only a driver and one other person may ride in a vehicle hauling explosives.

(c) Operating near power lines. For requirements when operating vehicles around high voltage power lines, see Subdivision **4/S**.

(d) Parking. When the operator of a commercial or industrial vehicle is not at the controls, the brakes must be set or the wheels blocked to prevent movement. Also, fully lower or block elevated attachments or components against descent. Unattended vehicles must be shut off. If parked on a slope, the wheels of commercial and industrial vehicles must be blocked or chocked.

(e) When towing, there must be a pin or other positive method of keeping the hitch pin in the hitch.

NOTE: Unattended is when the operator cannot see the vehicle or when they are more than 25 feet from it.

(4) Vehicle components.

(a) General.

(A) The engine shut-off device must be within reach of the operator when in their normal operating position.

(B) There must be steps, ladders, handholds, or grab bars on vehicles for safe access. Steps must have slip-resistant surfaces.

(C) The operator's station and work platforms on all agricultural vehicles must have guardrails or other fall protection when any of the following conditions exist:

(i) The operator is standing or not protected from falling by the framework, body, or design of the equipment; or

(ii) The floor of the operator's station is more than 22 inches above the adjacent floor level; or

(iii) The operator's station, regardless of height, is located so that a worker could fall into the path of equipment or into moving parts.

NOTE: For guardrails or similar barricades, the toprail must be 36 inches to 44 inches above the deck; the railing must have a midrail except when it would impair the operator's view to crop gathering or other functions.

(D) All vehicles loaded by cranes, power shovels, loaders or similar equipment must have a cab shield or canopy adequate to protect the operator from shifting or falling materials.

(E) The backs of vehicle cabs exposed to shifting loads must have a substantial bulkhead or similar device.

(F) Loads must not prevent doors of vehicle cabs from opening.

(G) When transporting workers and materials simultaneously, there must be a barrier to protect the workers and driver from the hazards of the materials. Otherwise, anchor or restrain the load.

(H) Class "A" and "B" commercial vehicles and industrial vehicles must have seats and back rests firmly secured in place, and such sides and ends as necessary to prevent riders from falling off the vehicle.

(I) The operator's platform must have a slip-resistant floor.

(J) Operating levers controlling hoisting or dumping devices on haulage bodies must have a latch or other device that prevents accidental starting or tripping of the mechanism.

(K) Trip handles for tailgates of dump trucks must work without endangering the operator.

(L) Surfaces of foot pedals must be slip resistant or have slip resistant coverings.

(b) Passenger compartments.

(A) Floors and decks must have safe footing.

(B) Floors and interior of sides and ends and tops of compartments used for transporting workers must be free of protruding objects that might cause injury.

(c) Windshields – windows.

(A) Windshields and windows must be safety glass that meets the requirements for safety glazing material for use anywhere in a motor vehicle as defined in the American National Standard, Safety Glazing Materials for Glazing Motor Vehicles Operating on Land Highways, Z26.1-1990, or a material that will furnish equivalent safety.

(B) Replace defective or broken glass that impairs the vision of the operator. Remove and replace broken or shattered glass that could cause injury to occupants.

NOTE: There is no requirement to change non-safety glass installed as "original equipment" in agricultural vehicles acquired before March 31, 1975 if it is unbroken. However, when it is replaced, the replacement glass must be approved safety glass.

(d) Brakes.

(A) All commercial and industrial vehicles must have brakes that can control them while fully loaded on any grade over which they might run.

(B) Parking brakes must be able to hold the loaded vehicle on any grade on which it may park, on any surface free of ice or snow.

(C) Brakes must be in safe working condition.

(e) Steering. Use steering or spinner knobs only if the steering mechanism is a type that prevents road reactions from causing the steering wheel to spin. The steering knob must be within the periphery of the wheel.

(f) Lights. Vehicles operated at night must have sufficient light at the operator's station.

(5) Inspection, testing, maintenance, and repair.

(a) Check vehicles as often as needed to assure that they are in safe operating condition and free of damage that could cause failure while in use.

(b) Before using it, fix defects that affect the safe operation of the vehicle.

(c) Do not continue to use a vehicle that becomes unsafe during use.

(d) Block or crib heavy machinery, equipment, elevated parts or parts supported by slings, hoists, jacks, or other devices, to prevent falling or shifting before employees work under or between them.

(A) Fully lower or block bulldozer and scraper blades, end-loader, end-loader buckets, dump bodies, and similar equipment when working on them or when they are not in use.

(B) All controls must be in neutral with motors off and brakes set, unless the work requires otherwise.

(e) Vehicles with dump bodies or other elevating parts must have positive means of support, permanently attached, and capable of being locked in position to prevent accidental lowering of the body. This device must support a raised body during maintenance or inspection work.

(f) Disconnect the battery when repairing a vehicle electrical system if accidental closing of the circuit could cause injury.

(6) Transportation of workers.

(a) Do not transport workers in flatbed trucks, dump trucks and pickups unless:

NOTE: This does not apply to field work or loading or unloading moving vehicles.

(A) Tilting, sliding or otherwise movable decks or bodies are secured to prevent accidental movement. Secure dump truck bodies or lock the hoist lever.

(B) Flatbed vehicles without seats must have sides and end gates at least 24 inches high. Workers must sit on the floor.

(b) Close pickup and dump truck tailgates and make workers sit on the floor unless there are seats secured in place and sides at least 42 inches high. A chain or rope must be across the rear of such vehicles with seats.

(c) When workers sit on low boxes or similar equipment, there must be side rails that increase the height of pickup and dump truck bodies to at least 36 inches. Omit the side rails when there is heavy canvas secured as a top and sides.

(d) In Class "A" and "B" commercial vehicles with seats workers must not sit on the floor in the aisles while the vehicle is moving. Not more than one worker per row of seats may stand. No workers may stand or sit in the driver's area ahead of the front row of seats. Never place boards across an aisle to provide additional seating space. Do not put seats in an aisle. Standing workers must use handholds.

(e) When transporting workers in any vehicle, nobody may stand for more than 1-hour or for more than 45 miles of travel, whichever is less. After that, they must get a rest period of at least 15 minutes or be given a seat.

(7) Fueling.

(a) When fueling vehicles there may be no smoking within 35 feet.

(b) Stop vehicle engines, except diesels, while fueling.

(c) Do not fuel vehicles within 35 feet of any open fires, flame or other sources of ignition.

(d) Refilling of vehicle tanks that use liquefied petroleum gases must be done outside. Do not overfill the tanks.

(8) Hauling of gasoline and other flammables.

(a) Do not transport gasoline and other flammable liquids on commercial vehicles carrying workers except:

(A) In closed containers of not more than 5 gallons capacity, and

(B) The containers must be accepted, labeled or listed. (As per definitions in OAR 437-004-0100 Universal Definitions), and

(C) Do not carry containers inside the passenger compartment, and

(D) Secure the containers to prevent shifting and put them in well-ventilated compartments or racks.

(b) You can haul gasoline in containers of more than 5 gallons in Class "C" commercial vehicles if all workers ride in the cab of the vehicle or in a separate compartment.

NOTE: Appendix A is a reprint of Oregon Revised Statutes that govern the use of some agricultural vehicles and equipment on public highways and roads. While Oregon OSHA has the legal authority to cite these sections, law enforcement officers are the usual source of enforcement. We offer these laws here as a courtesy to Oregon agricultural employers and in the interest of employee safety.

(9) Warning devices.

(a) All commercial and industrial vehicles must have an audible warning (horn) device that can be clearly heard above the surrounding noise near the vehicle.

(b) Vehicles with obstructed view to the rear must have a backup alarm audible above the surrounding noise level, unless:

(A) The vehicle backs up only when an observer signals that doing so is safe; or

(B) The vehicle operator first verifies that no person is in the path of the reverse travel, or can enter it unobserved.

(c) When towing mobile farm equipment, if the driver cannot see the workers in or on the towed unit, there must be a way to communicate with them. Otherwise, there must be a way for the riders in the towed unit to stop it in case of an emergency.

(10) Control of exhaust gases.

(a) Exhaust pipes must direct the exhaust gases away from the operator and passengers.

(b) Insulate or isolate exhaust pipes exposed to contact.

(11) Safety equipment – vehicles operated on public roads.

(a) There must be a first aid kit on Class A and B commercial type vehicles that transport workers. First aid kits must be clean, stocked and readily available to the driver or crew.

(b) There must be a B/C fire extinguisher on Class A and B commercial type vehicles that transport workers.

(c) Vehicles designed to run less than 25 mph must display a “slow moving vehicle” emblem as in 4/J, OAR 437-004-1180, Accident Prevention Signs, Symbols, Tags of the Oregon Occupational Safety and Health Code and in ORS 483.457, “Slow Moving Vehicle Emblem.”

Stat. Auth.: ORS 654.025(2) and 656.726(4).
Stats. Implemented: ORS 654.001 through 654.295.
Hist: OR-OSHA Admin. Order 4-1998, f/8/28/98, ef. 10/1/98.
OR-OSHA Admin. Order 9-2006, f. 9/22/06, ef. 9/22/06.

Appendix A to 437-004-3410, Specific Equipment

815.110 Requirements for and use of slow-moving vehicle emblem. This section establishes requirements for ORS 815.115. The requirements under this section are in addition to any other requirements for lighting equipment provided by law. Except as specifically provided by an exemption under ORS 815.120, a person violates ORS 815.115 if the person does not comply with any of the following requirements:

(1) The following types of vehicles must display slow-moving vehicle emblems described under ORS 815.060:

(a) Vehicles or combinations of vehicles designed for customary use at speeds of less than 25 miles per hour.

(b) Golf carts or similar vehicles when operated by a disabled person.

(c) Class I all-terrain vehicles operated on a highway under ORS 821.191 (1).

(2) Slow-moving vehicle emblems must meet the requirements for such emblems established by the Department of Transportation by rule under ORS 815.060.

(3) Slow-moving vehicle emblems shall be displayed on the rear of the power unit. When a combination of vehicles is being operated in a manner that obscures the emblem mounted on the power unit, an additional emblem shall be displayed on the rear of the rearmost vehicle in the combination. [1983 c.338 §469; 2001 c.529 §5]

815.120 Exemptions from emblem requirements. This section establishes exemptions from the requirements of ORS 815.110 and 815.115. The exemptions under this section are in addition to any exemptions under ORS 801.026. The exemptions under this section are partial or complete as described in the following:

(1) Vehicles of special interest that are registered under ORS 805.020 are deemed to comply with the requirements if:

(a) The vehicles are equipped with original manufacturer's equipment and accessories, or their equivalent, and are maintained in safe operating condition; or

(b) The vehicles are street rods that conform to ORS 815.107.

(2) Antique vehicles are not subject to the standards if the vehicles are maintained as collectors' items and used for exhibitions, parades, club activities and similar uses, but not used primarily for the transportation of persons or property.

(3) Road machinery, road rollers and farm tractors are not subject to the requirements except as provided in this subsection. Such vehicles or combinations thereof are subject to the requirements if the vehicles are designed for use at speeds less than 25 miles per hour, except when such vehicles are engaged in actual construction or maintenance work and guarded by a flagger or by clear visible warning signs. [1983 c.338 §470; 1985 c.16 §246; 1985 c.69 §8; 1997 c.402 §8]

IMPLEMENTS OF HUSBANDRY

820.400 Unlawful operation of implement of husbandry; penalty.

(1) A person commits the offense of unlawful operation of an implement of husbandry if the person operates an implement of husbandry in violation of any of the following:

(a) Such vehicle must be driven as closely as is practicable to the right-hand edge of the roadbed, including the shoulders, if any.

(b) Such vehicle, if the movement of the vehicle occurs during the hours of darkness, must be equipped and operating two headlights, clearance lights and reflectors marking the overall width as far as practical and visible from the front, rear and sides and a taillight.

(c) No television viewer, screen or other means of visually receiving a television broadcast shall be operated in an implement of husbandry at any time while the implement of husbandry is being operated on a highway.

(d) Such vehicle must display, when driven, a slow-moving vehicle emblem described in ORS 815.060.

(2) The offense described in this section, unlawful operation of an implement of husbandry, is a Class D traffic violation. [1983 c.338 §779; 1985 c.69 §7; 1985 c.393 §55; 1995 c.383 §101]

Stat. Auth.: ORS 654.025(2) and 656.726(4).
Stats. Implemented: ORS 654.001 through 654.295.
Hist: OR-OSHA Admin. Order 9-2006, f. 9/22/06, ef. 9/22/06.

437-004-3420 Working from Vehicles and Vehicle Loads.

(1) Riding on loads. Employees must not ride on top of loads that may dangerously shift, topple over, or otherwise become unstable. Employees must sit when riding on loads, except when doing field work at slow, even speeds over smooth ground.

(2) Field operations. When employees work on the cargo space of moving trucks or trailers, as in field operations, the operator must:

(a) Reduce vehicle speed to the slowest possible.

(b) Operate the vehicle at a steady, smooth rate. Avoid erratic moves.

(c) Travel parallel to rows or corrugations. When necessary to cross corrugations or ditches, warn employees to sit down in a safe place, away from the edge, and to hold on to a secure handhold.

(d) Except for vehicles being loaded while moving, set the brakes during loading.

(3) Load stability. Secure loads against dangerous displacement either by piling or securing to prevent shifting, toppling over or other instability.

(4) Access to the load. There must be adequate access to safely reach the top of the load for manual loading or unloading of high loads.

Stat. Auth.: ORS 654.025(2) and 656.726(4).
Stats. Implemented: ORS 654.001 through 654.295.
Hist: OR-OSHA Admin. Order 4-1998, f/8/28/98, ef. 10/1/98.

437-004-3430 Training for Agriculture Tractor Operators.

(1) Training. Train all employees who drive an agricultural tractor about the operating practices below and about any other practices peculiar to the work environment. Do this training at the time of initial assignment to driving duties and at least annually after that.

(a) Securely fasten your seat belt if the tractor has a ROPS.

(b) Where possible, avoid operating the tractor near ditches, embankments, and holes.

(c) Reduce speed when turning, crossing slopes and on rough, slick or muddy surfaces.

(d) Stay off slopes too steep for safe operation.

(e) Watch where you are going, especially at row ends, on roads, and around trees.

(f) Do not permit others to ride unless there is a safe seat.

(g) Operate the tractor smoothly – no jerky turns, starts, or stops.

(h) Hitch only to the drawbar and hitch points recommended by the tractor manufacturer.

(i) When the tractor is stopped, set brakes securely and use park lock if available.

Stat. Auth.: ORS 654.025(2) and 656.726(4).
Stats. Implemented: ORS 654.001 through 654.295.
Hist: OR-OSHA Admin. Order 4-1998, f/8/28/98, ef. 10/1/98.

437-004-3460 Industrial Vehicles.

(1) Modifications. The manufacturer or a professional engineer must direct modifications and additions that affect capacity and safe operation of industrial vehicles. Change the capacity, operations, and maintenance instruction plates, tags, or decals to reflect the changes.

(2) Nameplates and markings. All nameplates and markings must be in place and legible.

(3) Capacity markings. The rated capacity of each power industrial truck must be legible and in plain view of the operator.

Stat. Auth.: ORS 654.025(2) and 656.726(4).
Stats. Implemented: ORS 654.001 through 654.295.
Hist: OR-OSHA Admin. Order 4-1998, f/8/28/98, ef. 10/1/98.

437-004-3480 Bridges, Roads and Ramps.

(1) Application. This applies to bridges, roads and ramps on agricultural places of employment.

(2) Roads.

(a) Roads must be wide enough to allow safe operation of equipment.

(b) Low clearance areas that could present a hazard must have warning signs.

(c) Do not drive vehicles on or over broken planking, deep holes, large rocks, logs or other dangerous surface defects.

(d) Remove obstructions to clear view at intersections or sharp curves or take precautions to relieve the hazards.

(3) Bridges, runways and ramps.

(a) Bridges, runways or ramps and loading docks must be built to safely support any anticipated load. Ramp surfaces must have a material that minimizes the danger of skidding. Structural members must be sound and free of decay or deterioration that could reduce safety.

(b) Bridges and culverts must be wide enough to allow safe operation of equipment.

(c) The road surface of bridges and culverts must be safe, free of holes, broken planking, and sloughing, caving, or slipping fill materials or approaches.

Stat. Auth.: ORS 654.025(2) and 656.726(4).
Stats. Implemented: ORS 654.001 through 654.295.
Hist: OR-OSHA Admin. Order 4-1998, f/8/28/98, ef. 10/1/98.

437-004-3550 Servicing Multipiece and Single Piece Rim Wheels.

(1) Workers must use a safety tire rack, cage, or equivalent protection over tires mounted on split rims with locking rings or similar devices, when:

(a) inflating tires; or

(b) adding air to tires on or off the vehicle if the tire was run while flat or if the rim or locking device was disturbed in any way.

NOTE: A tire is flat if it has lost more than 50 percent of its normal pressure.

(2) Airlines used to inflate tires must have clip-on chucks.

Stat. Auth.: ORS 654.025(2) and 656.726(4).
Stats. Implemented: ORS 654.001 through 654.295.
Hist: OR-OSHA Admin. Order 4-1998, f/8/28/98, ef. 10/1/98.

437-004-3600 Roll-Over Protective Structures (ROPS) for Tractors in Agriculture.

(1) Definitions.

Agricultural tractor – A two- or four-wheel drive type vehicle, or track vehicle, of more than 20 engine horsepower, designed to furnish the power to pull, carry, propel, or drive implements designed for agriculture. Self-propelled implements are excluded.

Low profile tractor – A wheeled tractor with these characteristics:

The front wheel spacing equals the rear wheel spacing, measured from the centerline of each right wheel to the centerline of the opposite left wheel;

The clearance from the bottom of the chassis to the ground is less than 18 inches;

The highest point of the hood is 60 inches or less; and

The tractor is designed so that a seated operator straddles the transmission.

Tractor weight – Includes the protective frame or enclosure, all fuels, and other components required for normal use of the tractor. Add ballast as necessary to get a minimum total weight of 110 pounds (50.0 kilograms) per maximum power takeoff horsepower at the rated engine speed or the maximum gross vehicle weight specified by the manufacturer, whichever is the greatest. Front end weight must be at least 25 percent of the tractor test weight. If power takeoff horsepower is not available, use 95 percent of net engine flywheel horsepower.

(2) General requirements. Agricultural tractors manufactured after October 25, 1976, and before January 1, 2007, must meet these requirements:

(a) Roll-over protective structures (ROPS) for tractors used in agriculture. A roll-over protective structure must be on each tractor operated by an employee. Except as in **OAR 437-004-3600(5)**, ROPS on wheel-type tractors must meet the test and performance requirements of one of these:

The American Society of Agricultural Engineers Standard (ASAE) S306.3-1974, "Protective Frame for Agricultural Tractors – Test Procedures and Performance Requirements" and Society of Automotive Engineers (SAE) Standard J334-1970, "Protective Frame Test Procedures and Performance Requirements."

ASAE Standard S336.1-1974, "Protective Enclosures for Agricultural Tractors – Test Procedures and Performance Requirements" and SAE J1194-1994.

These ASAE and SAE standards are incorporated by reference. Get copies from:

American Society of Agricultural Engineers
2950 Niles Road, PO Box 229
St Joseph MI 49085

Society of Automotive Engineers
485 Lexington Avenue
New York NY 10017

Copies are available for review at the Oregon OSHA Resource Center, 350 Winter Street NE, Salem, Oregon 97301-3882.

(b) Agricultural tractors manufactured on or after January 1, 2007, must meet these requirements:

(A) Roll-over protective structures (ROPS) for tractors used in agriculture. A roll-over protective structure must be on each tractor operated by an employee. Except as in OAR 437-004-3600(5), ROPS on wheel-type tractors must meet the test and performance requirements of:

(i) 29 CFR 1928.52 Protective frames for wheel-type agricultural tractors – test procedures and performance requirements.

Link:
http://www.osha.gov/pls/oshaweb/owadisp.show_document?p_table=STANDARDS&p_id=13076

And

(ii) 29 CFR 1928.53 Protective enclosures for wheel-type agricultural tractors – test procedures and performance requirements.

Link:
http://www.osha.gov/pls/oshaweb/owadisp.show_document?p_table=STANDARDS&p_id=13077

Copies of Federal OSHA rules are available at the Oregon OSHA Resource Center, 350 Winter Street NE, Salem, Oregon 97301-3882.

(3) Seat belts.

(a) When these rules require ROPS, the employer must:

(A) Have a seat belt that meets the requirement of this rule on each tractor;

(B) Ensure that workers use a seat belt while the tractor is moving; and

(C) Ensure that the worker tightens the seat belt enough to hold them in the protective area of the ROPS.

(b) Each seat belt must meet the requirements in Society of Automotive Engineers Standard J114-1994, J140-1995, J141-1995, J339-1994, and J800-1994, except;

(c) On suspended seats, fasten the seat belt to the movable part of the seat to accommodate the ride motion of the operator.

(d) The seat belt anchorage must be able to withstand a static tensile load of 1,000 pounds (453.6 kilograms) at 45 degrees to the horizontal equally divided between the anchorages. The seat mounting must be able to withstand this load plus a load equal to four times the weight of all applicable seat components applied at 45 degrees to the horizontal in a forward and upward direction. In addition, the seat mounting must be able to withstand a 500-pound (226.8 kilograms) belt load plus twice the weight of all applicable seat components both applied at 45 degrees to the horizontal in an upward and rearward direction. Floor and seat deformation is acceptable if there is no structure failure or release of the seat adjusted mechanism or other locking device.

(e) The seat belt webbing material must be resistant to acids, alkalis, mildew, aging, moisture, and sunlight.

(4) Protection from sharp surfaces. Sharp edges and corners at the operator's station must not contribute to operator injury in case of a tip over or roll-over.

(5) Exempted uses. OAR 437-004-3600(2) and **(3)** do not apply to the following uses:

(a) "Low profile" tractors used in orchards, vineyards or hop yards where the vertical clearance would interfere with normal use, and while their use is incidental to the work done in that location.

(b) "Low profile" tractors used inside a farm building or greenhouse where the vertical clearance does not allow a tractor with ROPS to operate, and while their use is incidental to the work done in that location.

(c) Tractors with mounted equipment that is incompatible with ROPS (e.g., corn pickers, cotton strippers, vegetable pickers and fruit harvesters);

(d) Track-type agricultural tractors whose overall width (as measured between the outside edges of the tracks) is at least three times the height of their rated center of gravity, and whose rated maximum speed in either forward or reverse is not greater than 7 mph, when used only for tillage or harvesting operations and while their use is incidental thereto, and that:

(A) Does not involve operating on slopes more than 40 percent from the horizontal, and

(B) Does not involve operating on piled crop products or residue, such as, silage in stacks or pits, and

(C) Does not involve operating near irrigation ditches, or other excavations more than 2 feet deep which contain slopes more than 40 percent from the horizontal; and

(D) Does not involve construction type work, such as bulldozing, grading or land clearing.

(6) Remounting. When ROPS is removed for any reason, remount it to meet the requirements of these rules.

(7) Labeling. Each ROPS must have a permanent label that gives the:

(a) Manufacturer's or fabricator's name and address;

(b) ROPS model number, if any;

(c) Tractor makes, models, or series numbers that it is designed to fit; and

(d) That the ROPS model was tested according to the requirements of these rules.

Stat. Auth.: ORS 654.025(2) and 656.726(4).
Stats. Implemented: ORS 654.001 through 654.295.
Hist: OR-OSHA Admin. Order 4-1998, f/8/28/98, ef. 10/1/98.
OR-OSHA Admin. Order 9-2006, f. 9/22/06, ef. 9/22/06.

437-004-3650 Roll-Over Protective Structures – Industrial Vehicles.

(1) Application. There must be roll-over protective structures (ROPS) on certain industrial vehicles manufactured after July 1, 1969. ROPS requirements apply to the following types of industrial vehicles and equipment: Rubber-tired self-propelled scrapers; front-end loaders and dozers; wheel-type industrial tractors; crawler tractors; crawler-type loaders; and motor graders, with or without attachments. This requirement does not apply to sideboom pipe laying tractors, or other vehicles whose structure prevents overturn. OAR 437-004-3600 covers ROPS for tractors used only in farming.

(2) ROPS – general requirements.

(a) Roll-over protective structures and their supporting attachments to industrial vehicles must be capable of supporting twice the weight of the vehicle, applied at the point of impact.

(b) The design objective for roll-over protective structures on industrial vehicles is to minimize the likelihood of a complete vehicle overturn, and to minimize the possibility of the operator being crushed.

(c) There must be a vertical clearance of at least 52 inches between the work deck and the ROPS canopy.

(d) Once removed, remount ROPS with bolts or welding or equal or better quality as required for the original mounting.

(3) Defects.

(a) Repairs to defective ROPS must be of equal quality or better materials and welding as on the original structure.

(b) Minimum performance criteria for roll-over protective structures for designated vehicles are in the following Society of Automotive Engineers (SAE) standards:

(A) Prime movers, for scrapers, water wagons, bottom dump wagons, side dump wagons, rear dump wagons, towed fifth wheel attachments. (SAE J1040, 1994)

(B) Wheeled front-end loaders and wheeled dozers. (SAE J1040, 1994)

(C) Track-type tractors and front-end loaders. (SAE J1040, 1994)

(D) Motor graders. (SAE J1040, 1994)

(E) Wheel-type agricultural and industrial tractors. (SAE J167, 1992)

(F) Falling object protective structures (FOPS). (SAE J231, May 1981)

(4) Identification of ROPS. Each ROPS must have the following information permanently affixed to the structure:

(a) Manufacturer or fabricator's name and address;

(b) ROPS model number, if any; and

(c) Machine make, model, or series number that the structure fits.

(5) Approved structures. Any machine in use, with roll-over protective structures, complies with these rules if it meets the roll-over protective structure requirements of the U. S. Army Corps of Engineers, or the Bureau of Reclamation of the U. S. Department of the Interior, in effect on April 5, 1972. The requirements in effect are:

(a) U. S. Army Corps of Engineers: General Safety Requirements, EM-385-1-1 (September 1996).

(b) Bureau of Reclamation, U. S. Department of the Interior: Safety and Health Regulations for Construction, Part II (September 1971).

Stat. Auth.: ORS 654.025(2) and 656.726(4).
Stats. Implemented: ORS 654.001 through 654.295.
Hist: OR-OSHA Admin. Order 4-1998, f/8/28/98, ef. 10/1/98.

437-004-3660 Vehicle-Mounted Elevating and Rotating Work Platforms.

NOTE: This section does not apply to aerial devices made and used in orchards or tree operations, such as pruning.

(1) Definitions.

Aerial device. Any vehicle-mounted device, telescoping or articulating, or both, for positioning personnel.

Platform. Any personnel-carrying device (basket or bucket) which is part of an aerial device.

(2) Design requirements.

(a) The equipment operation manual must be with the equipment or the workers using it. Workers must follow the manufacturer's instructions and procedures. Work must not exceed equipment limitations and restrictions.

(b) "Field modification" of aerial lifts for uses other than those intended by the manufacturer are acceptable, if the manufacturer certifies in writing that the modification conforms with ANSI A92.2-1990 and this section and is at least as safe as the equipment was before modification. This certification may also be by any other equivalent entity, such as a nationally recognized testing laboratory.

(c) Platforms must have standard guardrails that conform with OAR 437-004-0320(6).

(d) Gates in platform enclosures must have safety latches that prevent unintended opening.

(e) Articulating boom and extensible boom platforms, primarily designed to carry personnel, must have both platform (upper) and lower controls. Upper controls must be in or beside the platform within easy reach of the operator. Lower controls must allow overriding of the upper controls. Markings must clearly show each control's function.

(3) Specific requirements.

(a) Extensible and articulating boom platforms.

(A) Test lift controls before use to determine that they are in safe working condition.

(B) Allow only trained persons to operate an aerial lift.

(C) Do not belt off to an adjacent pole, structure or equipment while working from an aerial lift.

(D) Stand firmly on the floor of the basket. Do not sit or climb on the edge of the basket or use planks, ladders or other devices for a work position.

(E) Wear a body belt and a lanyard attached to the boom or basket when in an aerial lift. The lanyard must be as short as possible for the work but in no case longer than 6 feet.

(F) Do not exceed the manufacturer's boom and basket load limits. Keep those limits legibly posted on the boom.

(G) Set the brakes and position the outriggers on pads or a solid surface. Chock the wheels before using an aerial lift on an incline.

(H) Do not move an aerial lift truck when the boom is elevated with people in the basket, except for equipment specially designed for such movement.

(I) Do not alter the insulated portion of an aerial lift in a way that might reduce its insulating value.

(J) Except as in **(3)(b)(H)** above, before moving an aerial lift for travel, inspect the boom(s) to see that it is properly cradled and outriggers are stowed.

(4) Working near overhead high voltage lines.

(a) Required clearances for stationary work. Do not require or permit anybody to enter or work near high-voltage lines unless danger from accidental contact with the lines is guarded against or eliminated. Clearances and distances in OAR 437-004-3050 apply.

(b) Clearance or safeguards for moving equipment. Do not move equipment in a way that might allow the people or objects to come within 10 feet of high-voltage lines.

(A) For equipment in transit, on smooth surfaces, the clearance must be at least 4 feet for voltages less than 50 kV., 10 feet for voltages more than 50 kV., up to and including 345 kV., and 16 feet for voltages up to and including 750 kV.

(B) When it is hard for the operator to see well enough to keep the desired clearance, somebody must watch the work and warn the operator.

(C) Movement of the structures supporting the high-voltage lines or any of their equipment, fixtures or attachments must not reduce the 10-foot clearance requirement.

(c) Warning signs required. Post a warning sign, readable from 12 feet, that says, "Unlawful to operate this equipment within 10 feet of high-voltage lines."

(d) Notification to power company and responsibility for safeguards. When working or placing material or equipment within 10 feet of any high-voltage line, the employer must promptly notify the operator of the high-voltage line. Employers are responsible for completing the safety measures required before allowing any work that could impair the clearance.

Stat. Auth.: ORS 654.025(2) and 656.726(4).
Stats. Implemented: ORS 654.001 through 654.295.
Hist: OR-OSHA Admin. Order 4-1998, f/8/28/98, ef. 10/1/98.

– END OF DOCUMENT –

Oregon Administrative Rules

Chapter 437

Division 4

Agriculture

Worker Protection Standard

Subdivision

W

Administrative Order 2-2018

Oregon OSHA

osha.oregon.gov

The Oregon Department of Consumer and Business Services adopted these rules pursuant to ORS 654.025(2).

The Secretary of State designated OAR Chapter 437 as the "Oregon Occupational Safety and Health Code." Six general subject areas within this code are designated as "Divisions."

- **Division 1** General Administrative Rules
- **Division 2** General Occupational Safety and Health Rules
- **Division 3** Construction
- **Division 4** Agriculture
- **Division 5** Maritime Activities
- **Division 7** Forest Activities
- **Oregon Revised Statutes (ORS) 654** The Oregon Safe Employment Act (OSEAct)

Oregon-initiated rules in this division of the Oregon Occupational Safety and Health Code are numbered in a uniform system developed by the Secretary of State. This system does not number the rules in sequence (001, 002, 003, etc.). Omitted numbers may be assigned to new rules at the time of their adoption.

Oregon-initiated rules are arranged in the following Basic Codification Structure adopted by the Secretary of State for Oregon Administrative Rules (OAR):

Chapter	Division	Rule	Section	Subsection	Paragraphs
437	*002*	*0322*	*(1)*	*(a)*	*(A)(i)(I)*

The majority of Oregon OSHA rules are adopted by reference from the Code of Federal Regulations (CFR), and are arranged in the following basic federal numbering system:

Chapter	Division	Part	Subpart (Subdivision)	Section	Paragraphs
437	002	1910	G	.303	(a)(1)(i)(A)*(1)*

The terms "subdivision" and "subpart" are synonymous within OAR 437, Oregon Occupational Safety and Health Code.

To obtain an order form or copies of these codes, address:

Department of Consumer & Business Services
Oregon Occupational Safety & Health Division (Oregon OSHA)
350 Winter St. NE
Salem, OR 97301-3882

Or call the Oregon OSHA Resource Library at 503-378-3272

The rules referenced in this division are available for viewing in the Office of the Secretary of State, Oregon State Archives Building, Salem, Oregon, or the Central Office, Oregon Occupational Safety and Health Division of the Department of Consumer and Business Services, 350 Winter St. NE, Salem, Oregon, and on our web site at osha.oregon.gov.

Table of contents

437-004-6000 Adoption by Reference of Federal Worker Protection Standard . 1
437-004-6001 Expiration and Implementation Dates 2

Subpart D--General Provisions

170.301 Scope and purpose 5
170.303 Applicability of this part 5
170.305 Definitions 6
170.309 Agricultural employer duties 11
170.311 Display requirements for pesticide safety information and pesticide application and hazard information 14
170.313 Commercial pesticide handler employer duties 19
170.315 Prohibited actions 22

Subpart E--Requirements for Protection of Agricultural Workers

170.401 Training requirements for workers 25
437-004-6401 Effective dates for worker training programs in Oregon 26
170.403 Establishment-specific information for workers 29
170.405 Entry restrictions associated with pesticide applications 30
437-004-6405 Restrictions associated with outdoor production pesticide applications 30
437-004-6406 Pesticide spray drift and innovative methods 34
170.407 Worker entry restrictions after pesticide applications 37
170.409 Oral and posted notification of worker entry restrictions 37
170.411 Decontamination supplies for workers 44

Subpart F--Requirements for Protection of Agricultural Pesticide Handlers

170.501 Training requirements for handlers 47
437-004-6501 Handler training programs in Oregon 48
437-004-6502 Oregon requirements for Worker Protection Standard trainers of handlers who qualify using train-the-trainer programs 49

170.503 Knowledge of labeling, application-specific, and establishment-specific information for handlers 50
170.505 Requirements during applications to protect handlers, workers, and other persons 51
170.507 Personal protective equipment 52
437-004-6508 Respiratory Protection 55
170.509 Decontamination and eye flushing supplies for handlers 58
437-004-6509 Emergency eye-washes and eye flushing supplies 59

Subpart G--Exemptions, Exceptions and Equivalency

170.601 Exemptions 61
170.603 Exceptions for entry by workers during restricted-entry intervals 62
170.605 Agricultural employer responsibilities to protect workers entering treated areas during a restricted-entry interval 65
170.607 Exceptions to personal protective equipment requirements specified on pesticide product labeling 67

Notes

Historical Notes for Subdivision W 73
List of Figures for Subdivision W 76
List of Tables for Subdivision W 76

437-004-6000 Adoption by Reference of Federal Worker Protection Standard

In addition to, and not in lieu of, any other safety and health codes contained in OAR Chapter 437, the Department adopts by reference the following federal regulations printed as part of the Code of Federal Regulations, 40 CFR 170, in the Federal Register:

Note: Oregon OSHA did not adopt revisions to Sections 170.2; 170.135; 170.235 published in the November 2, 2015 Federal Register.

(4) Subpart D--General Provisions

(a) 40 CFR 170.301 Scope and purpose.

(b) 40 CFR 170.303 Applicability of this part.

(c) 40 CFR 170.305 Definitions.

(d) 40 CFR 170.309 Agricultural employer duties.

(e) 40 CFR 170.311 Display requirements for pesticide safety information and pesticide application and hazard information.

(f) 40 CFR 170.313 Commercial pesticide handler employer duties.

(g) 40 CFR 170.315 Prohibited actions.

Note: Oregon OSHA did not adopt 170.317 Violations of this part.

(5) Subpart E--Requirements for Protection of Agricultural Workers

(a) 40 CFR 170.401 Training requirements for workers.

(b) 40 CFR 170.403 Establishment-specific information for workers.

(c) 40 CFR 170.405 Entry restrictions associated with pesticide applications.

(d) 40 CFR 170.407 Worker entry restrictions after pesticide applications.

(e) 40 CFR 170.409 Oral and posted notification of worker entry restrictions.

(f) 40 CFR 170.411 Decontamination supplies for workers.

(6) Subpart F--Requirements for Protection of Agricultural Pesticide Handlers

(a) 40 CFR 170.501 Training requirements for handlers.

(b) 40 CFR 170.503 Knowledge of labeling, application-specific, and establishment-specific information for handlers.

(c) 40 CFR 170.505 Requirements during applications to protect handlers, workers, and other persons.

(d) 40 CFR 170.507 Personal protective equipment.

(e) 40 CFR 170.509 Decontamination and eye flushing supplies for handlers.

(7) Subpart G--Exemptions, Exceptions and Equivalency

(a) 40 CFR 170.601 Exemptions.

(b) 40 CFR 170.603 Exceptions for entry by workers during restricted-entry intervals.

(c) 40 CFR 170.605 Agricultural employer responsibilities to protect workers entering treated areas during a restricted-entry interval.

(d) 40 CFR 170.607 Exceptions to personal protective equipment requirements specified on pesticide product labeling.

Note: Oregon OSHA did not adopt Sec. 170.609 Equivalency requests.

These standards are available at the Oregon Occupational Safety and Health Division, Oregon Department of Consumer and Business Services, and the United States Government Printing Office.

Stat. Auth.: ORS 654.025(2) and 656.726(4).
Stats. Implemented: ORS 654.001 through 654.295.
Hist: OR-OSHA Admin. Order 4-1998, f. 8/28/98, ef. 10/1/98.
OR-OSHA Admin. Order 7-2004, f. 12/30/04, ef. 12/30/04.
OR-OSHA Admin. Order 9-2006, f. 9/22/06, ef. 9/22/06.
OR-OSHA Admin. Order 9-2009, f. 9/21/09, ef. 9/21/09.
OR-OSHA Admin. Order 1-2017, f. 2/14/17, ef. 1/1/18.

437-004-6001 Expiration and Implementation Dates

(1) Expiration date. Division 4/W, 170.1 through 170.260 of the Worker Protection Standard shall expire on, and will no longer be effective after December 31, 2017.

(2) Implementation date. Beginning January 1, 2018, the requirements of Division 4/W, 170.301 through 170.607; and 437-004-6001, 437-004-6401, 437-004-6501, 437-004-6502, 437-004-6508, and 437-004-6509, shall apply to the use of pesticide products as defined in Section 170.303 Applicability of the Worker Protection Standard.

Note: Oregon OSHA is initiating a new rulemaking on OAR 437-004-6405 and OAR 437-004-6406 in early 2017 with the intention of adopting those rules into the modified Division 4/W Worker Protection Standard with an effective date of January 1, 2018.

Stat. Auth.: ORS 654.025(2) and 656.726(4).
Stats. Implemented: ORS 654.001 – 654.295, 654.750 – 654.780.
Hist.: OR-OSHA Admin. Order 1-2017, f. 2/14/17, ef. 1/1/18.

Subpart D--General Provisions

170.301 Scope and purpose

This regulation is primarily intended to reduce the risks of illness or injury to workers and handlers resulting from occupational exposures to pesticides used in the production of agricultural plants on agricultural establishments. It requires agricultural employers and commercial pesticide handler employers to provide specific information and protections to workers, handlers and other persons when pesticides are used on agricultural establishments in the production of agricultural plants. It also requires handlers to wear the labeling-specified clothing and personal protective equipment when performing handler activities, and to take measures to protect workers and other persons during pesticide applications.

Stat. Auth.: ORS 654.025(2) and 656.726(4).
Stats. Implemented: ORS 654.001 – 654.295, 654.750 – 654.780.
Hist.: OR-OSHA Admin. Order 1-2017, f. 2/14/17, ef. 1/1/18.

170.303 Applicability of this part

(a) This regulation applies whenever a pesticide product bearing a label requiring compliance with this part is used in the production of agricultural plants on an agricultural establishment, except as provided in paragraphs (b) and (c) of this section.

(b) This regulation does not apply when a pesticide product bearing a label requiring compliance with this part is used on an agricultural establishment in any of the following circumstances:

(1) As part of government-sponsored public pest control programs over which the owner, agricultural employer and handler employer have no control, such as mosquito abatement and Mediterranean fruit fly eradication programs.

(2) On plants other than agricultural plants, which may include plants in home fruit and vegetable gardens and home greenhouses, and permanent plantings for ornamental purposes, such as plants that are in ornamental gardens, parks, public or private landscaping, lawns or other grounds that are intended only for aesthetic purposes or climatic modification.

(3) For control of vertebrate pests, unless directly related to the production of an agricultural plant.

(4) As attractants or repellents in traps.

(5) On the harvested portions of agricultural plants or on harvested timber.

(6) For research uses of unregistered pesticides.

(7) On pasture and rangeland where the forage will not be harvested for hay.

(8) In a manner not directly related to the production of agricultural plants, including, but not limited to structural pest control and control of vegetation in non-crop areas.

(c) Where a pesticide product's labeling-specific directions for use or other labeling requirements are inconsistent with requirements of this part, users must comply with the pesticide product labeling, except as provided for in Sec. 170.601, 170.603 and 170.607.

Stat. Auth.: ORS 654.025(2) and 656.726(4).
Stats. Implemented: ORS 654.001 – 654.295, 654.750 – 654.780.
Hist.: OR-OSHA Admin. Order 1-2017, f. 2/14/17, ef. 1/1/18.

170.305 Definitions

Terms used in this part have the same meanings they have in the Federal Insecticide, Fungicide, and Rodenticide Act, as amended. In addition, the following terms, when used in this part, shall have the following meanings:

Agricultural employer means any person who is an owner of, or is responsible for the management or condition of, an agricultural establishment, and who employs any worker or handler.

Agricultural establishment means any farm, forest operation, or nursery engaged in the outdoor or enclosed space production of agricultural plants. An establishment that is not primarily agricultural is an agricultural establishment if it produces agricultural plants for transplant or use (in part or their entirety) in another location instead of purchasing the agricultural plants.

Agricultural plant means any plant, or part thereof, grown, maintained, or otherwise produced for commercial purposes, including growing, maintaining or otherwise producing plants for sale or trade, for research or experimental purposes, or for use in part or their entirety in another location. Agricultural plant includes, but is not limited to, grains, fruits and vegetables; wood fiber or timber products; flowering and foliage plants and trees; seedlings and transplants; and turf grass produced for sod. Agricultural plant does not include pasture or rangeland used for grazing.

Application exclusion zone means the area surrounding the application equipment that must be free of all persons other than appropriately trained and equipped handlers during pesticide applications.

Chemigation means the application of pesticides through irrigation systems.

Closed system means an engineering control used to protect handlers from pesticide exposure hazards when mixing and loading pesticides.

Commercial pesticide handler employer means any person, other than an agricultural employer, who employs any handler to perform handler activities on an agricultural establishment. A labor contractor who does not provide pesticide application services or supervise the performance of handler activities, but merely employs laborers, who perform handler activities at the direction of an agricultural or handler employer, is not a commercial pesticide handler employer.

Commercial pesticide handling establishment means any enterprise, other than an agricultural establishment, that provides pesticide handler or crop advising services to agricultural establishments.

Crop advisor means any person who is assessing pest numbers, damage, pesticide distribution, or the status or requirements of agricultural plants.

Designated representative means any persons designated in writing by a worker or handler to exercise a right of access on behalf of the worker or handler to request and obtain a copy of the pesticide application and hazard information required by Sec. 170.309(h) in accordance with Sec. 170.311(b) of this part.

Early entry means entry by a worker into a treated area on the agricultural establishment after a pesticide application is complete, but before any restricted-entry interval for the pesticide has expired.

Employ means to obtain, directly or through a labor contractor, the services of a person in exchange for a salary or wages, including piece-rate wages, without regard to who may pay or who may receive the salary or wages. It includes obtaining the services of a self-employed person, an independent contractor, or a person compensated by a third party, except that it does not include an agricultural employer obtaining the services of a handler through a commercial pesticide handler employer or a commercial pesticide handling establishment.

Enclosed cab means a cab with a nonporous barrier that totally surrounds the occupant(s) of the cab and prevents dermal contact with pesticides that are being applied outside of the cab.

Enclosed space production means production of an agricultural plant indoors or in a structure or space that is covered in whole or in part by any nonporous covering and that is large enough to permit a person to enter.

Fumigant means any pesticide product that is a vapor or gas, or forms a vapor or gas upon application, and whose pesticidal action is achieved through the gaseous or vapor state.

Hand labor means any agricultural activity performed by hand or with hand tools that causes a worker to have substantial contact with plants, plant parts, or soil and other surfaces that may contain pesticide residues, except that hand labor does not include operating, moving, or repairing irrigation or watering equipment or performing crop advisor tasks.

Handler means any person, including a self-employed person, who is employed by an agricultural employer or commercial pesticide handler employer and performs any of the following activities:

(1) Mixing, loading, or applying pesticides.

(2) Disposing of pesticides.

(3) Handling opened containers of pesticides, emptying, triple-rinsing, or cleaning pesticide containers according to pesticide product labeling instructions, or disposing of pesticide containers that have not been cleaned. The term does not include any person who is only handling unopened pesticide containers or pesticide containers that have been emptied or cleaned according to pesticide product labeling instructions.

Note: Unless pesticide containers have been emptied AND cleaned according to product labeling instructions, handling them is considered a type of handling activity.

(4) Acting as a flagger.

(5) Cleaning, adjusting, handling, or repairing the parts of mixing, loading, or application equipment that may contain pesticide residues.

(6) Assisting with the application of pesticides.

(7) Entering an enclosed space after the application of a pesticide and before the inhalation exposure level listed in the labeling has been reached or one of the ventilation criteria established by Sec. 170.405(b)(3) or the labeling has been met to operate ventilation equipment, monitor air levels, or adjust or remove coverings used in fumigation.

(8) Entering a treated area outdoors after application of any soil fumigant during the labeling-specified entry-restricted period to adjust or remove coverings used in fumigation.

(9) Performing tasks as a crop advisor during any pesticide application or restricted-entry interval, or before the inhalation exposure level listed in the pesticide product labeling has been reached or one of the ventilation criteria established by Sec. 170.405(b)(3) or the pesticide product labeling has been met.

Handler employer means any person who is self-employed as a handler or who employs any handler.

Immediate family is limited to the spouse, parents, stepparents, foster parents, father-in-law, mother-in-law, children, stepchildren, foster children, sons-in-law, daughters-in-law, grandparents, grandchildren, brothers, sisters, brothers-in-law, sisters-in-law, aunts, uncles, nieces, nephews, and first cousins. ``First cousin'' means the child of a parent's sibling, i.e., the child of an aunt or uncle.

Note: In Oregon, the farm's family members include all of the immediate family listed above and any blood relative living as a dependent of the core family. Farm family members do not fall under the rules and jurisdiction of Oregon OSHA whether or not they elect workers' compensation coverage. Where farms also hire non-family workers, Oregon OSHA will only cite for violations where the non-family workers are or could be exposed to the hazard.

Labor contractor means a person, other than a commercial pesticide handler employer, who employs workers or handlers to perform tasks on an agricultural establishment for an agricultural employer or a commercial pesticide handler employer.

Outdoor production means production of an agricultural plant in an outside area that is not enclosed or covered in any way that would obstruct the natural air flow.

Owner means any person who has a present possessory interest (e.g., fee, leasehold, rental, or other) in an agricultural establishment. A person who has both leased such agricultural establishment to another person and granted that same person the right and full authority to manage and govern the use of such agricultural establishment is not an owner for purposes of this part.

Personal protective equipment means devices and apparel that are worn to protect the body from contact with pesticides or pesticide residues, including, but not limited to, coveralls, chemical-resistant suits, chemical-resistant gloves, chemical-resistant footwear, respirators, chemical-resistant aprons, chemical-resistant headgear, and protective eyewear.

Restricted-entry interval means the time after the end of a pesticide application during which entry into the treated area is restricted.

Safety data sheet has the same meaning as the definition at 29 CFR 1910.1200(c).

Treated area means any area to which a pesticide is being directed or has been directed.

Use, as in "to use a pesticide" means any of the following:

(1) Pre-application activities, including, but not limited to:

(i) Arranging for the application of the pesticide.

(ii) Mixing and loading the pesticide.

(iii) Making necessary preparations for the application of the pesticide, including responsibilities related to worker notification, training of workers or handlers, providing decontamination supplies, providing pesticide safety information and pesticide application and hazard information, use and care of personal protective equipment, providing emergency assistance, and heat stress management.

(2) Application of the pesticide.

(3) Post-application activities intended to reduce the risks of illness and injury resulting from handlers' and workers' occupational exposures to pesticide residues during and after the restricted-entry interval, including responsibilities related to worker notification, training of workers or early-entry workers, providing decontamination supplies, providing pesticide safety information and pesticide application and hazard information, use and care of personal protective equipment, providing emergency assistance, and heat stress management.

(4) Other pesticide-related activities, including, but not limited to, transporting or storing pesticides that have been opened, cleaning equipment, and disposing of excess pesticides, spray mix, equipment wash waters, pesticide containers, and other pesticide-containing materials.

Worker means any person, including a self-employed person, who is employed and performs activities directly relating to the production of agricultural plants on an agricultural establishment.

Note: Oregon statutes define workers (employees) more generally to include any individual, including a minor, whether lawfully or unlawfully employed, who engages to furnish services for remuneration, financial or otherwise, subject to the direction and control of an employer.

Worker housing area means any place or area of land on or near an agricultural establishment where housing or space for housing is provided for workers or handlers by an agricultural employer, owner, labor contractor, or any other person responsible for the recruitment or employment of agricultural workers.

Stat. Auth.: ORS 654.025(2) and 656.726(4).
Stats. Implemented: ORS 654.001 – 654.295, 654.750 – 654.780.
Hist.: OR-OSHA Admin. Order 1-2017, f. 2/14/17, ef. 1/1/18.

170.309 Agricultural employer duties

Agricultural employers must:

(a) Ensure that any pesticide is used in a manner consistent with the pesticide product labeling, including the requirements of this part, when applied on the agricultural establishment.

(b) Ensure that each worker and handler subject to this part receives the protections required by this part.

(c) Ensure that any handler and any early entry worker is at least 18 years old.

(d) Provide to each person, including labor contractors, who supervises any workers or handlers information and directions sufficient to ensure that each worker and handler receives the protections required by this part. Such information and directions must specify the tasks for which the supervisor is responsible in order to comply with the provisions of this part.

(e) Require each person, including labor contractors, who supervises any workers or handlers to provide sufficient information and directions to each worker and handler to ensure that they can comply with the provisions of this part.

(f) Provide emergency assistance in accordance with this paragraph. If there is reason to believe that a worker or handler has experienced a potential pesticide exposure during his or her employment on the agricultural establishment or shows symptoms similar to those associated with acute exposure to pesticides during or within 72 hours after his or her employment on the agricultural establishment, and needs emergency medical treatment, the agricultural employer must do all of the following promptly after learning of the possible poisoning or injury:

(1) Make available to that person transportation from the agricultural establishment, including any worker housing area on the establishment, to an operating medical care facility capable of providing emergency medical treatment to a person exposed to pesticides.

(2) Provide all of the following information to the treating medical personnel:

(i) Copies of the applicable safety data sheet(s) and the product name(s), EPA registration number(s) and active ingredient(s) for each pesticide product to which the person may have been exposed.

(ii) The circumstances of application or use of the pesticide on the agricultural establishment.

(iii) The circumstances that could have resulted in exposure to the pesticide.

(g) Ensure that workers or other persons employed by the agricultural establishment do not clean, repair, or adjust pesticide application equipment, unless trained as a handler under Sec. 170.501. Before allowing any person not directly employed by the agricultural establishment to clean, repair, or adjust equipment that has been used to mix, load, transfer, or apply pesticides, the agricultural employer must provide all of the following information to such person:

(1) Pesticide application equipment may be contaminated with pesticides.

(2) The potentially harmful effects of exposure to pesticides.

(3) Procedures for handling pesticide application equipment and for limiting exposure to pesticide residues.

(4) Personal hygiene practices and decontamination procedures for preventing pesticide exposures and removing pesticide residues.

Note: Oregon OSHA did not adopt Sec. 170.501(c)(2) or (3). OAR 437-004-6501 applies instead.

(h) Display, maintain, and provide access to pesticide safety information and pesticide application and hazard information in accordance with Sec. 170.311 if workers or handlers are on the establishment and within the last 30 days a pesticide product has been used or a restricted-entry interval for such pesticide has been in effect on the establishment.

(i) Ensure that before a handler uses any equipment for mixing, loading, transferring, or applying pesticides, the handler is instructed in the safe operation of such equipment.

(j) Ensure that before each day of use, equipment used for mixing, loading, transferring, or applying pesticides is inspected for leaks, clogging, and worn or damaged parts, and any damaged equipment is repaired or replaced.

(k) Ensure that whenever handlers employed by a commercial pesticide handling establishment will be on an agricultural establishment, the handler employer is provided information about, or is aware of, the specific location and description of any treated areas on the agricultural establishment where a restricted-entry interval is in effect that the handler may be in (or may walk within 1/4 mile of), and any restrictions on entering those areas.

(l) Ensure that workers do not enter any area on the agricultural establishment where a pesticide has been applied until the applicable pesticide application and hazard information for each pesticide product applied to that area is displayed in accordance with Sec. 170.311(b), and until after the restricted-entry interval has expired and all treated area warning signs have been removed or covered, except for entry permitted by Sec. 170.603 of this part.

(m) Provide any records or other information required by this part for inspection and copying upon request by an employee of EPA or any duly authorized representative of a Federal, State or Tribal government agency responsible for pesticide enforcement.

Stat. Auth.: ORS 654.025(2) and 656.726(4).
Stats. Implemented: ORS 654.001 – 654.295, 654.750 – 654.780.
Hist.: OR-OSHA Admin. Order 1-2017, f. 2/14/17, ef. 1/1/18.

170.311 Display requirements for pesticide safety information and pesticide application and hazard information

(a) Display of Pesticide Safety Information. Whenever pesticide safety information and pesticide application and hazard information are required to be provided under Sec. 170.309(h), pesticide safety information must be displayed in accordance with this paragraph.

(1) General. The pesticide safety information must be conveyed in a manner that workers and handlers can understand.

Note: Oregon OSHA did not adopt 170.311(a)(2)(i)-(ix). The pesticide safety information required to be posted prior to January 1, 2017 is described in Sections 170.135 and 170.235 of the Worker Protection Standard.

(3) Content after January 1, 2018. After January 1, 2018, the pesticide safety information must include all of the points in Sec. 170.311(a)(3)(i)-(x) instead of the points listed in Sec. 170.311(a)(2)(i)-(ix).

(i) Avoid getting on the skin or into the body any pesticides that may be on or in plants, soil, irrigation water, tractors, and other equipment, on used personal protective equipment, or drifting from nearby applications.

(ii) Wash before eating, drinking, using chewing gum or tobacco, or using the toilet.

(iii) Wear work clothing that protects the body from pesticide residues (long-sleeved shirts, long pants, shoes and socks, and a hat or scarf).

(iv) Wash or shower with soap and water, shampoo hair, and put on clean clothes after work.

(v) Wash work clothes separately from other clothes before wearing them again.

(vi) If pesticides are spilled or sprayed on the body use decontamination supplies to wash immediately, or rinse off in the nearest clean water, including springs, streams, lakes or other sources if more readily available than decontamination supplies, and as soon as possible, wash or shower with soap and water, shampoo hair, and change into clean clothes.

(vii) Follow directions about keeping out of treated areas and application exclusion zones.

(viii) Instructions to employees to seek medical attention as soon as possible if they believe they have been poisoned, injured or made ill by pesticides.

(ix) The name, address, and telephone number of a nearby operating medical care facility capable of providing emergency medical treatment. This information must be clearly identified as emergency medical contact information on the display.

(x) The name, address and telephone number of the State or Tribal pesticide regulatory agency.

(4) Changes to pesticide safety information. The agricultural employer must update the pesticide safety information display within 24 hours of notice of any changes to the information required in Sec. 170.311(a)(2)(viii) or 170.311(a)(3)(ix).

Note: The required safety information referred to in (4) is the name, address, and telephone number of the facility identified as emergency medical contact.

(5) Location. The pesticide safety information must be displayed at each of the following sites on the agricultural establishment:

(i) The site selected pursuant to Sec. 170.311(b)(2) for display of pesticide application and hazard information.

(ii) Anywhere that decontamination supplies must be provided on the agricultural establishment pursuant to Sec. Sec. 170.411, 170.509 or 170.605, but only when the decontamination supplies are located at permanent sites or being provided at locations and in quantities to meet the requirements for 11 or more workers or handlers.

(6) Accessibility. When pesticide safety information is required to be displayed, workers and handlers must be allowed access to the pesticide safety information at all times during normal work hours.

(7) Legibility. The pesticide safety information must remain legible at all times when the information is required to be displayed.

(b) Keeping and displaying pesticide application and hazard information. Whenever pesticide safety information and pesticide application and hazard information is required to be provided under Sec. 170.309(h), pesticide application and hazard information for any pesticides that are used on the agricultural establishment must be displayed, retained, and made accessible in accordance with this paragraph.

Note: The full requirements of the Hazard Communication Standard apply in Oregon. For employers subject to the Division 4 rules, Division 4/Z, OAR 437-004-9800 applies. For employers subject to the Division 2 and/or the Division 7 rules, Division 2/Z, 1910.1200 applies.

(1) Content. The pesticide application and hazard information must include all of the following information for each pesticide product applied:

(i) A copy of the safety data sheet.

(ii) The name, EPA registration number, and active ingredient(s) of the pesticide product.

(iii) The crop or site treated and the location and description of the treated area.

(iv) The date(s) and times the application started and ended.

(v) The duration of the applicable labeling-specified restricted-entry interval for that application.

(2) Location. The pesticide application and hazard information must be displayed at a place on the agricultural establishment where workers and handlers are likely to pass by or congregate and where it can be readily seen and read.

(3) Accessibility. When the pesticide application and hazard information is required to be displayed, workers and handlers must be allowed access to the location of the information at all times during normal work hours.

(4) Legibility. The pesticide application and hazard information must remain legible at all times when the information is required to be displayed.

(5) Timing. The pesticide application and hazard information for each pesticide product applied must be displayed no later than 24 hours after the end of the application of the pesticide. The pesticide application and hazard information must be displayed continuously from the beginning of the display period until at least 30 days after the end of the last applicable restricted-entry interval, or until workers or handlers are no longer on the establishment, whichever is earlier.

(6) Record retention. Whenever pesticide safety information and pesticide application and hazard information is required to be displayed in accordance with this paragraph (b), the agricultural employer must retain the pesticide application and hazard information described in Sec. 170.311(b)(1) on the agricultural establishment for two years after the date of expiration of the restricted-entry interval applicable to the pesticide application conducted.

Note: The full requirements of 1910.1020, Access to Employee Exposure and Medical Records apply in Oregon.

(7) Access to pesticide application and hazard information by a worker or handler.

(i) If a person is or was employed as a worker or handler by an establishment during the period that particular pesticide application and hazard information was required to be displayed and retained for two years in accordance with Sec. 170.311(b)(5) and 170.311(b)(6), and the person requests a copy of such application and/or hazard information, or requests access to such application and/or hazard information after it is no longer required to be displayed, the agricultural employer must provide the worker or handler with a copy of or access to all of the requested information within 15 days of the receipt of any such request. The worker or handler may make the request orally or in writing.

(ii) Whenever a record has been previously provided without cost to a worker or handler or their designated representative, the agricultural employer may charge reasonable, non-discriminatory administrative costs (i.e., search and copying expenses but not including overhead expenses) for a request by the worker or handler for additional copies of the record.

(8) Access to pesticide application and hazard information by treating medical personnel. Any treating medical personnel, or any person acting under the supervision of treating medical personnel, may request, orally or in writing, access to or a copy of any information required to be retained for two years by Sec. 170.311(b)(6) in order to inform diagnosis or treatment of a worker or handler who was employed on the establishment during the period that the information was required to be displayed. The agricultural employer must promptly provide a copy of or access to all of the requested information applicable to the worker's or handler's time of employment on the establishment after receipt of the request.

(9) Access to pesticide application and hazard information by a designated representative.

(i) Any worker's or handler's designated representative may request access to or a copy of any information required to be retained for two years by Sec. 170.311(b)(6) on behalf of a worker or handler employed on the establishment during the period that the information was required to be displayed. The agricultural employer must provide access to or a copy of the requested information applicable to the worker's or handler's time of employment on the establishment within 15 days after receiving any such request, provided the request meets the requirements specified in Sec. 170.311(b)(9)(ii).

(ii) A request by a designated representative for access to or a copy of any pesticide application and/or hazard information must be in writing and must contain all of the following:

(A) The name of the worker or handler being represented.

(B) A description of the specific information being requested. The description should include the dates of employment of the worker or handler, the date or dates for which the records are requested, type of work conducted by the worker or handler (e.g., planting, harvesting, applying pesticides, mixing or loading pesticides) during the period for which the records are requested, and the specific application and/or hazard information requested.

(C) A written statement clearly designating the representative to request pesticide application and hazard information on the worker's or handler's behalf, bearing the worker's or handler's printed name and signature, the date of the designation, and the printed name and contact information for the designated representative.

(D) If the worker or handler requests that the pesticide application and/or the hazard information be sent, direction for where to send the information (e.g., mailing address or email address).

(iii) If the written request from a designated representative contains all of the necessary information specified in Sec. 170.313(b)(9)(ii), the employer must provide a copy of or access to all of the requested information applicable to the worker's or handler's time of employment on the establishment to the designated representative within 15 days of receiving the request.

(iv) Whenever a record has been previously provided without cost to a worker or handler or their designated representative, the agricultural employer may charge reasonable, non-discriminatory administrative costs (i.e., search and copying expenses but not including overhead expenses) for a request by the designated representative for additional copies of the record.

Stat. Auth.: ORS 654.025(2) and 656.726(4).
Stats. Implemented: ORS 654.001 – 654.295, 654.750 – 654.780.
Hist.: OR-OSHA Admin. Order 1-2017, f. 2/14/17, ef. 1/1/18.

170.313 Commercial pesticide handler employer duties

Commercial pesticide handler employers must:

(a) Ensure that any pesticide is used in a manner consistent with the pesticide product labeling, including the requirements of this part, when applied on an agricultural establishment by a handler employed by the commercial pesticide handling establishment.

(b) Ensure each handler employed by the commercial pesticide handling establishment and subject to this part receives the protections required by this part.

(c) Ensure that any handler employed by the commercial pesticide handling establishment is at least 18 years old.

(d) Provide to each person, including labor contractors, who supervises any handlers employed by the commercial pesticide handling establishment, information and directions sufficient to ensure that each handler receives the protections required by this part. Such information and directions must specify the tasks for which the supervisor is responsible in order to comply with the provisions of this part.

(e) Require each person, including labor contractors, who supervises any handlers employed by the commercial pesticide handling establishment, to provide sufficient information and directions to each handler to ensure that the handler can comply with the provisions of this part.

(f) Ensure that before any handler employed by the commercial pesticide handling establishment uses any equipment for mixing, loading, transferring, or applying pesticides, the handler is instructed in the safe operation of such equipment.

(g) Ensure that, before each day of use, equipment used by their employees for mixing, loading, transferring, or applying pesticides is inspected for leaks, obstructions, and worn or damaged parts, and any damaged equipment is repaired or is replaced.

(h) Ensure that whenever a handler who is employed by a commercial pesticide handling establishment will be on an agricultural establishment, the handler is provided information about, or is aware of, the specific location and description of any treated areas where a restricted-entry interval is in effect, and the restrictions on entering those areas.

(i) Provide the agricultural employer all of the following information before the application of any pesticide on an agricultural establishment:

(1) Specific location(s) and description of the area(s) to be treated.

(2) The date(s) and start and estimated end times of application.

(3) Product name, EPA registration number, and active ingredient(s).

(4) The labeling-specified restricted-entry interval applicable for the application.

(5) Whether posting, oral notification or both are required under Sec. 170.409.

(6) Any restrictions or use directions on the pesticide product labeling that must be followed for protection of workers, handlers, or other persons during or after application.

(j) If there are any changes to the information provided in Sec. 170.313(i)(1), Sec. 170.313(i)(4), Sec. 170.313(i)(5), Sec. 170.313(i)(6) or if the start time for the application will be earlier than originally forecasted or scheduled, ensure that the agricultural employer is provided updated information prior to the application. If there are any changes to any other information provided pursuant to Sec. 170.313(i), the commercial pesticide handler employer must provide updated information to the agricultural employer within two hours after completing the application. Changes to the estimated application end time of less than one hour need not be reported to the agricultural employer.

(k) Provide emergency assistance in accordance with this paragraph. If there is reason to believe that a handler employed by the commercial pesticide handling establishment has experienced a potential pesticide exposure during his or her employment by the commercial pesticide handling establishment or shows symptoms similar to those associated with acute exposure to pesticides during or within 72 hours after his or her employment by the commercial pesticide handling establishment, and needs emergency medical treatment, the commercial pesticide handler employer must do all of the following promptly after learning of the possible poisoning or injury:

(1) Make available to that person transportation from the commercial pesticide handling establishment, or any agricultural establishment on which that handler may be working on behalf of the commercial pesticide handling establishment, to an operating medical care facility capable of providing emergency medical treatment to a person exposed to pesticides.

(2) Provide all of the following information to the treating medical personnel:

(i) Copies of the applicable safety data sheet(s) and the product name(s), EPA registration number(s) and active ingredient(s) for each pesticide product to which the person may have been exposed.

(ii) The circumstances of application or use of the pesticide.

(iii) The circumstances that could have resulted in exposure to the pesticide.

(l) Ensure that persons directly employed by the commercial pesticide handling establishment do not clean, repair, or adjust pesticide application equipment, unless trained as a handler under Sec. 170.501. Before allowing any person not directly employed by the commercial pesticide handling establishment to clean, repair, or adjust equipment that has been used to mix, load, transfer, or apply pesticides, the commercial pesticide handler employer must provide all of the following information to such persons:

(1) Notice that the pesticide application equipment may be contaminated with pesticides.

(2) The potentially harmful effects of exposure to pesticides.

(3) Procedures for handling pesticide application equipment and for limiting exposure to pesticide residues.

(4) Personal hygiene practices and decontamination procedures for preventing pesticide exposures and removing pesticide residues.

(m) Provide any records or other information required by this part for inspection and copying upon request by an employee of EPA or any duly authorized representative of a Federal, State or Tribal government agency responsible for pesticide enforcement.

Stat. Auth.: ORS 654.025(2) and 656.726(4).
Stats. Implemented: ORS 654.001 – 654.295, 654.750 – 654.780.
Hist.: OR-OSHA Admin. Order 1-2017, f. 2/14/17, ef. 1/1/18.

170.315 Prohibited actions

No agricultural employer, commercial pesticide handler employer, or other person involved in the use of a pesticide to which this part applies, shall intimidate, threaten, coerce, or discriminate against any worker or handler for complying with or attempting to comply with this part, or because the worker or handler provided, caused to be provided or is about to provide information to the employer or the EPA or any duly authorized representative of a Federal, State or Tribal government regarding conduct that the worker or handler reasonably believes violates this part, has made a complaint, testified, assisted, or participated in any manner in an investigation, proceeding, or hearing concerning compliance with this part, or has objected to, or refused to participate in, any activity, policy, practice, or assigned task that the worker or handler reasonably believed to be in violation of this part. Any such intimidation, threat, coercion, or discrimination violates FIFRA section 12(a)(2)(G), 7 U.S.C. 136(a)(2)(G).

Stat. Auth.: ORS 654.025(2) and 656.726(4).
Stats. Implemented: ORS 654.001 – 654.295, 654.750 – 654.780.
Hist.: OR-OSHA Admin. Order 1-2017, f. 2/14/17, ef. 1/1/18.

Note: Oregon OSHA did not adopt 170.317 Violations of this part. In Oregon, violations of any Oregon OSHA standards including the Worker Protection Standard will be subject to Oregon OSHA penalties as established in OAR Chapter 437, Division 1, General Administrative Rules, under the provisions of the Oregon Safe Employment Act.

Subpart E--Requirements for Protection of Agricultural Workers

170.401 Training requirements for workers

(a) General requirement. Before any worker performs any task in a treated area on an agricultural establishment where within the last 30 days a pesticide product has been used or a restricted-entry interval for such pesticide has been in effect, the agricultural employer must ensure that each worker has been trained in accordance with this section within the last 12 months, except as provided in paragraph (b) of this section.

(b) Exceptions. The following workers need not be trained under this section:

(1) A worker who is currently certified as an applicator of restricted use pesticides under part 171 of this chapter.

Note: Part 171 of Chapter 40 CFR is about the certification of pesticide applicators; in Oregon, it is administered by the Oregon Department of Agriculture.

(2) A worker who has satisfied the handler training requirements in Sec. 170.501.

(3) A worker who is certified or licensed as a crop advisor by a program acknowledged as appropriate in writing by EPA or the State or Tribal agency responsible for pesticide enforcement, provided that such certification or licensing requires pesticide safety training that includes all the topics in Sec. 170.501(c)(2) or Sec. 170.501(c)(3) as applicable depending on the date of training.

(c) Training programs.

(1) Pesticide safety training must be presented to workers either orally from written materials or audio-visually, at a location that is reasonably free from distraction and conducive to training. All training materials must be EPA-approved. The training must be presented in a manner that the workers can understand, such as through a translator. The training must be conducted by a person who meets the worker trainer requirements of paragraph (c)(4) of this section, and who must be present during the entire training program and must respond to workers' questions.

Note: Oregon OSHA did not adopt Sec. 170.401(c)(2) or (3). OAR 437-004-6401 applies instead. Workers using an exception to the training requirements for crop advisors – as described in 170.401(b)(3) of the Worker Protection Standard – must demonstrate that the program included all the topics listed in OAR 437-004-6501.

437-004-6401 Effective dates for worker training programs in Oregon

Beginning on January 1, 2018, training programs for workers must include, at a minimum, all of the following topics:

(1) The responsibility of agricultural employers to provide workers and handlers with information and protections designed to reduce work-related pesticide exposures and illnesses. This includes ensuring workers and handlers have been trained on pesticide safety, providing pesticide safety and application and hazard information, decontamination supplies and emergency medical assistance, and notifying workers of restrictions during applications and on entering pesticide treated areas. A worker or handler may designate in writing a representative to request access to pesticide application and hazard information.

(2) How to recognize and understand the meaning of the posted warning signs used for notifying workers of restrictions on entering pesticide treated areas on the establishment.

(3) How to follow directions and/or signs about keeping out of pesticide treated areas subject to a restricted-entry interval and application exclusion zones.

(4) Where and in what forms pesticides may be encountered during work activities, and potential sources of pesticide exposure on the agricultural establishment. This includes exposure to pesticide residues that may be on or in plants, soil, tractors, application and chemigation equipment, or used personal protective equipment, and that pesticides may drift through the air from nearby applications or be in irrigation water.

(5) Potential hazards from toxicity and exposure that pesticides present to workers and their families, including acute and chronic effects, delayed effects, and sensitization.

(6) Routes through which pesticides can enter the body.

(7) Signs and symptoms of common types of pesticide poisoning.

(8) Emergency first aid for pesticide injuries or poisonings.

(9) Routine and emergency decontamination procedures, including emergency eye flushing techniques, and if pesticides are spilled or sprayed on the body to use decontamination supplies to wash immediately or rinse off in the nearest clean water, including springs, streams, lakes or other sources if more readily available than decontamination supplies, and as soon as possible, to wash or shower with soap and water, shampoo hair, and change into clean clothes.

(10) How and when to obtain emergency medical care.

(11) Instructions to wear work clothing that protects the body from pesticide residues and wash hands before eating, drinking, using chewing gum or tobacco, or using the toilet, when working in pesticide treated areas.

(12) Instructions to wash or shower with soap and water, shampoo hair, and change into clean clothes as soon as possible after working in pesticide treated areas.

(13) Information about the potential hazards from pesticide residues on clothing.

(14) Wash work clothes before wearing them again and wash them separately from other clothes.

(15) Do not take pesticides or pesticide containers used at work to your home.

(16) Safety data sheets provide hazard, emergency medical treatment and other information about the pesticides used on the establishment they may come in contact with. The responsibility of agricultural employers to do all of the following:

(a) Display safety data sheets for all pesticides used on the establishment.

(b) Provide workers and handlers information about the location of the safety data sheets on the establishment.

(c) Provide workers and handlers unimpeded access to safety data sheets during normal work hours.

(17) The rule prohibits agricultural employers from allowing or directing any worker to mix, load or apply pesticides or assist in the application of pesticides unless the worker has been trained as a handler.

(18) The responsibility of agricultural employers to provide specific information to workers before directing them to perform early-entry activities. Workers must be 18 years old to perform early-entry activities.

(19) Potential hazards to children and pregnant women from pesticide exposure.

(20) Instructions to keep children and nonworking family members away from pesticide treated areas.

(21) Instructions to remove work boots or shoes before entering your home, and remove work clothes and wash or shower before physical contact with children or family members, after working in pesticide treated areas.

(22) How to report suspected pesticide use violations to the State or Tribal agency responsible for pesticide enforcement.

(23) The rule prohibits agricultural employers from intimidating, threatening, coercing, or discriminating against any worker or handler for complying with or attempting to comply with the requirements of this rule, or because the worker or handler provided, caused to be provided or is about to provide information to the employer, or the EPA or its agents, or to Oregon OSHA regarding conduct that the employee reasonably believes violates these rules, and/or made a complaint, testified, assisted, or participated in any manner in an investigation, proceeding, or hearing concerning compliance with these rules.

Stat. Auth.: ORS 654.025(2) and 656.726(4).
Stats. Implemented: ORS 654.001 – 654.295, 654.750 – 654.780.
Hist.: OR-OSHA Admin. Order 1-2017, f. 2/14/17, ef. 1/1/18.

170.401 (c) Training Programs

(4) The person who conducts the training must meet one of the following criteria:

(i) Be designated as a trainer of certified applicators, handlers or workers by EPA or the State or Tribal agency responsible for pesticide enforcement.

(ii) Have completed an EPA-approved pesticide safety train-the-trainer program for trainers of workers.

(iii) Be currently certified as an applicator of restricted use pesticides under part 171 of this chapter.

Note: Part 171 of Chapter 40 CFR is about the certification of pesticide applicators; in Oregon, it is administered by the Oregon Department of Agriculture.

(d) Recordkeeping

(1) For each worker required to be trained under paragraph (a), the agricultural employer must maintain on the agricultural establishment, for two years from the date of the training, a record documenting each worker's training including all of the following:

(i) The trained worker's printed name and signature.

(ii) The date of the training.

(iii) Information identifying which EPA-approved training materials were used.

(iv) The trainer's name and documentation showing that the trainer met the requirements of Sec. 170.401(c)(4) at the time of training.

(v) The agricultural employer's name.

(2) An agricultural employer who provides, directly or indirectly, training required under paragraph (a) must provide to the worker upon request a copy of the record of the training that contains the information required under Sec. 170.401(d)(1).

Stat. Auth.: ORS 654.025(2) and 656.726(4).
Stats. Implemented: ORS 654.001 – 654.295, 654.750 – 654.780.
Hist.: OR-OSHA Admin. Order 1-2017, f. 2/14/17, ef. 1/1/18.

170.403 Establishment-specific information for workers

Before any worker performs any activity in a treated area on an agricultural establishment where within the last 30 days a pesticide product has been used, or a restricted-entry interval for such pesticide has been in effect, the agricultural employer must ensure that the worker has been informed of, in a manner the worker can understand, all of the following establishment-specific information:

(a) The location of pesticide safety information required by Sec. 170.311(a).

(b) The location of pesticide application and hazard information required by Sec. 170.311(b).

(c) The location of decontamination supplies required by Sec. 170.411.

Stat. Auth.: ORS 654.025(2) and 656.726(4).
Stats. Implemented: ORS 654.001 – 654.295, 654.750 – 654.780.
Hist.: OR-OSHA Admin. Order 1-2017, f. 2/14/17, ef. 1/1/18.

170.405 Entry restrictions associated with pesticide applications

Note: Oregon OSHA has declined to adopt 40 CFR 170.405(a). In Oregon OAR 437-004-6405 applies.

437-004-6405 Restrictions associated with outdoor production pesticide applications

This rule applies in Oregon where workers or other people are adjacent to pesticides being applied in outdoor production areas that are within the boundaries of the establishment. This rule becomes effective January 1, 2019.

Note: *Nothing in these rules affects separate statutory or regulatory requirements such as the buffer zone requirement related to aerial herbicide applications in forestry operations (ORS 527.672).*

(1) Treated area: The area to which a pesticide is being directed and/or deposited during an application. After the application is complete, the treated area is subject to the labeling-specified restricted-entry interval (REI) and the post-application entry restrictions specified in Sec. 170.407 of the Worker Protection Standard (WPS).

(2) Enclosed agricultural structure: a fully-enclosed space (has walls, ceilings, and floors that minimize the entry of outside air when doors, windows, and mechanical air intakes are closed) with an interior area that shelters occupants from dermal exposure to pesticide spray drift.

(3) Application Exclusion Zone (AEZ): The AEZ is an area that moves with and exists in relationship to the application equipment. The number of feet shown is the horizontal radius of the area surrounding the application equipment during the application process and may extend beyond the treated area. It extends downward from that horizontal plane to the ground. Pesticide labels that have more stringent restrictions regarding distances must be followed. The agricultural employer must implement the AEZ as follows:

(a) Workers and labor housing occupants must evacuate the AEZ, which shall extend 150 feet from the application equipment and last until 15 minutes after the application equipment passes, when the label requires the handler to use respiratory protection during application and one of the following applies:

(A) The application is by air blast sprayer;

(B) The pesticide is applied aerially;

(C) The spray quality is smaller than medium;

(b) Workers and labor housing occupants must either remain in an enclosed agricultural structure or evacuate the AEZ, which shall extend 100 feet from the application equipment and last until 15 minutes after the application equipment passes, when the label does not require the handler to use respiratory protection during application and one of the following applies:

(A) The application is by air blast sprayer;

(B) The pesticide is applied aerially;

(C) The spray quality is smaller than medium.

Note: *Workers not on paid status or labor housing occupants must be permitted to evacuate even if the employer otherwise chooses to allow them to remain in an enclosed agricultural structure.*

(c) Workers and labor housing occupants must either remain in an enclosed agricultural structure or evacuate the AEZ, which shall extend 25 feet from the application equipment when all of the following apply:

(A) The application is not by air blast sprayer;

(B) The pesticide is not applied aerially;

(C) The pesticide is sprayed from a height greater than 12 inches from the planting medium;

(D) The spray quality is medium or larger;

(d) No AEZ applies for appropriately trained and equipped handlers involved in the application.

Note: *No AEZ is required for applications not covered by the above. Examples include applications of granular, soil incorporated (other than fumigants) pre-plant, dipping cuttings, and at-plant pesticide applications as long as they are applied from a distance of less than 12 inches from the planting medium and use a spray quality of medium or larger.*

See Figure 1 - Worker Protection Standard, Application Exclusion Zone Decision Matrix.

(4) The agricultural employer must ensure that prior to pesticide applications, any enclosed agricultural structures (labor housing or work-related structures) that are located within the AEZ and that are used at any time by employees and other occupants must have all of the following:

(a) All doors and windows closed;

(b) Any air in-take devices or mechanisms turned off;

(c) Provisions to protect or store personal or household items that are not located in an enclosed agricultural structure from potential contamination;

(d) A closeable storage area for shoes/boots to prevent tracking of pesticide into the structures where people live or reside.

(5) Employers must provide the following information in a manner that is easy to understand and effectively conveys the information needed prior to the pesticide application, to occupants of an enclosed agricultural structure in the AEZ:

(a) Instructions on closing windows and doors to minimize exposure to outside air regardless of whether they are staying inside the enclosed agricultural structure or evacuating during nearby pesticide applications.

(b) Instructions on how to close potential air-intakes and any other measures to minimize exposure to outside air during nearby pesticide applications.

(c) The start and stop times for remaining inside the enclosed agricultural structures and how to determine when the application equipment is in range.

(d) Instructions as to whether people can, as appropriate, evacuate or stay in an enclosed agricultural structure, how to maintain protective measures, and how long they must remain outside the AEZ.

e) Instructions on how to protect personal or household items in the AEZ from potential contamination.

(f) Instructions on how to report pesticide residue or deposit on enclosed agricultural structures, personal, or household items in AEZ.

(6) Employers must provide information and ensure that all adult occupants of agriculture labor housing within the AEZ have access to:

(a) An information station located in close proximity to agriculture labor housing that contains information on pending applications, with a means of alerting occupants to changing information.

(b) Information on how to prevent and reduce pesticide exposure.

(c) Information about the location of the pesticide safety information required by Sec. 170.311(a)

(7) If anyone other than a trained and protected handler exits an enclosed agricultural structure and enters the AEZ the handler must suspend the pesticide application as per Sec. 170.505(b).

Figure 1 - Worker Protection Standard, Application Exclusion Zone Decision Matrix

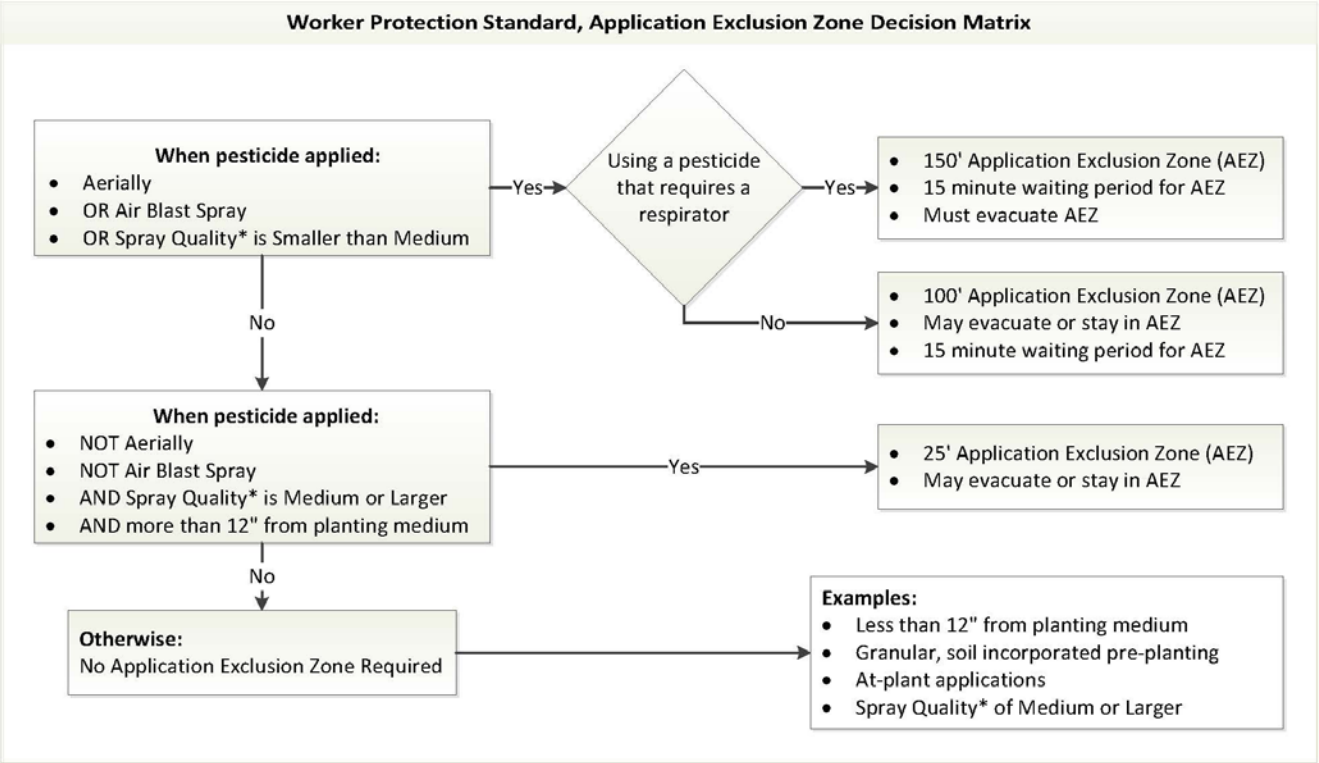

**Spray quality: (as defined by the American Society of Agricultural and Biological Engineers Standard S-572.1) considers several factors including the nozzle design, system pressure, and speed of the application equipment. The eight spray quality categories are referenced in nozzle charts:*

Smaller than medium (droplet spectrum with volume median diameter of less than 294 microns+):

Extra fine (XF)
Very fine (VF)
Fine (F)

Medium or larger (droplet spectrum with volume median diameter of 294 microns+ or more):

Medium (M)
Coarse (C)
Very coarse (VC)
Extra coarse (XC)
Ultra coarse (UC)

+Micron = (um) =micrometer: Standard unit of measure for particulate matter.

1 um is 1/1000th of a millimeter.

Stat. Auth.: ORS 654.025(2) and 656.726(4).
Stats. Implemented: ORS 654.001 – 654.295, 654.750 – 654.780.
Hist.: OR-OSHA Admin. Order 2-2018, f. 06/29/18, ef. 01/01/19.

437-004-6406 Pesticide spray drift and innovative methods

(1) In the event that drift makes contact with labor housing areas or other structures used by employees, including enclosed agricultural structures within an AEZ, the employer must ensure that it is properly cleaned up with a minimum of employee or housing occupant exposure.

Note: *Identifying and addressing any issues resulting from the spray application are the responsibility of the employer; any employees assigned these duties must have training appropriate to the job expectations.*

(2) To encourage innovation, including the use of EPA's Drift Reduction Technology and other methods that the employer can demonstrate reduce the potential for spray drift, Oregon OSHA may grant approval for an AEZ that differs from the rule requirements yet meets the intent of these rules through the variance process described in OAR 437-001-0400.

Note: *Examples of possible innovations include:*

- *Advanced application practices for handlers in the prevention of spray drift (which may include using only one side of the application equipment) and the use of the Environmental Protection Agency's Drift Reduction Technologies*
- *Two applicators, one monitoring conditions and remaining in contact with applicator of the treated area*
- *Safer chemicals and chemistries*

Stat. Auth.: ORS 654.025(2) and 656.726(4).
Stats. Implemented: ORS 654.001 – 654.295, 654.750 – 654.780.
Hist.: OR-OSHA Admin. Order 2-2018, f. 06/29/18, ef. 01/01/19.

170.405 (b) Enclosed space production pesticide applications.

(1) During any enclosed space production pesticide application described in column A of the Table under paragraph (b)(4) of this section, the agricultural employer must not allow or direct any worker or other person, other than an appropriately trained and equipped handler involved in the application, to enter or to remain in the area specified in column B of the Table under paragraph (b)(4) of this section during the application and until the time specified in column C of the Table under paragraph (b)(4) of this section has expired.

(2) After the time specified in column C of the Table under paragraph (b)(4) of this section has expired, the area subject to the labeling-specified restricted-entry interval and the post-application entry restrictions specified in Sec. 170.407 is the area specified in column D of the Table under paragraph (b)(4) of this section.

(3) When column C of the Table under paragraph (b)(4) of this section specifies that ventilation criteria must be met, ventilation must continue until the air concentration is measured to be equal to or less than the inhalation exposure level required by the labeling. If no inhalation exposure level is listed on the labeling, ventilation must continue until after one of the following conditions is met:

(i) Ten air exchanges are completed.

(ii) Two hours of ventilation using fans or other mechanical ventilating systems.

(iii) Four hours of ventilation using vents, windows, or other passive ventilation.

(iv) Eleven hours with no ventilation followed by one hour of mechanical ventilation.

(v) Eleven hours with no ventilation followed by two hours of passive ventilation.

(vi) Twenty-four hours with no ventilation.

(4) The following Table applies to 170.405 paragraphs (b)(1), (2), and (3):

Table 1 – Entry Restrictions During Enclosed Space Production Pesticide Applications

A. When a pesticide is applied:	B. Workers and other persons, other than appropriately trained and equipped handlers, are prohibited in:	C. Until:	D. After the expiration of time specified in column C, the area subject to the restricted-entry interval is:
(1) As a fumigant.	Entire enclosed space plus any adjacent structure or area that cannot be sealed off from the treated area.	The ventilation criteria of 170.405 (b)(3) are met	No post-application entry restrictions required by § 170.407 after criteria in column C are met.
(2) As a (i) Smoke, or (ii) Mist, or (iii) Fog, or (iv) As a spray using a spray quality (droplet spectrum) of smaller than medium (volume median diameter of less than 294 microns).	Entire enclosed space.	The ventilation criteria of 170.405 (b)(3) are met.	Entire enclosed space.
(3) Not as in (1) or (2), and for which a respiratory protection device is required for application by the pesticide product labeling.	Treated area plus 25 feet in all directions of the treated area, but not outside the enclosed space.	The ventilation criteria of 170.405 (b)(3) are met.	Treated area.
(4) Not as in (1), (2) or (3), and: (i) From a height of greater than 12 inches from the planting medium, or (ii) As a spray using a spray quality (droplet spectrum) of medium or larger (volume median diameter of 294 microns or greater).	Treated area plus 25 feet in all directions of the treated area, but not outside the enclosed space.	Application is complete.	Treated area.
(5) Otherwise.	Treated area.	Application is complete.	Treated area.

Stat. Auth.: ORS 654.025(2) and 656.726(4).
Stats. Implemented: ORS 654.001 – 654.295, 654.750 – 654.780.
Hist.: OR-OSHA Admin. Order 1-2017, f. 2/14/17, ef. 1/1/18.

170.407 Worker entry restrictions after pesticide applications

(a) After the application of any pesticide to an area of outdoor production, the agricultural employer must not allow or direct any worker to enter or to remain in the treated area before the restricted-entry interval specified on the pesticide product labeling has expired and all treated area warning signs have been removed or covered, except for early-entry activities permitted by Sec. 170.603.

(b) After the application of any pesticide to an area of enclosed space production, the agricultural employer must not allow or direct any worker to enter or to remain in the areas specified in column D of the Table in Sec. 170.405(b)(4), before the restricted-entry interval specified on the pesticide product labeling has expired and all treated area warning signs have been removed or covered, except for early-entry activities permitted by Sec. 170.603.

(c) When two or more pesticides are applied to a treated area at the same time, the applicable restricted-entry interval is the longest of all applicable restricted-entry intervals.

Stat. Auth.: ORS 654.025(2) and 656.726(4).
Stats. Implemented: ORS 654.001 – 654.295, 654.750 – 654.780.
Hist.: OR-OSHA Admin. Order 1-2017, f. 2/14/17, ef. 1/1/18.

170.409 Oral and posted notification of worker entry restrictions

(a) General Requirement. The agricultural employer must notify workers of all entry restrictions required by Sec. 170.405 and 170.407 in accordance with this section.

Note: Oregon OSHA did not adopt 170.405(a) Outdoor production pesticide applications. OAR 437-004-6405, when adopted, will apply instead.

(1) Type of notification required.

(i) Double notification. If the pesticide product labeling has a statement requiring both the posting of treated areas and oral notification to workers, the agricultural employer must post signs in accordance with paragraph (b) of this section and must also provide oral notification of the application to workers in accordance with paragraph (c) of this section.

(ii) Outdoor production areas subject to restricted-entry intervals greater than 48 hours. If a pesticide with product labeling that requires a restricted-entry interval greater than 48 hours is applied to an outdoor production area, the agricultural employer must notify workers of the application by posting warning signs in accordance with paragraph (b) of this section.

(iii) Outdoor production areas subject to restricted-entry intervals equal to or less than 48 hours. If a pesticide with product labeling that requires a restricted-entry interval equal to or less than 48 hours is applied to an outdoor production area, the agricultural employer must notify workers of the application either by posting warning signs in accordance with paragraph (b) of this section or by providing workers with an oral warning in accordance with paragraph (c) of this section.

(iv) Enclosed space production areas subject to restricted-entry intervals greater than four hours. If a pesticide with product labeling that requires a restricted-entry interval greater than four hours is applied to an enclosed space production area, the agricultural employer must notify workers of the application by posting warning signs in accordance with paragraph (b) of this section.

(v) Enclosed space production areas subject to restricted-entry intervals equal to or less than four hours. If a pesticide with product labeling that requires a restricted-entry interval equal to or less than four hours is applied to an enclosed space production area, the agricultural employer must notify workers of the application either by posting warning signs in accordance with paragraph (b) of this section or by providing workers with an oral warning in accordance with paragraph (c) of this section.

(2) Exceptions. Notification does not need to be given to a worker if the agricultural employer can ensure that one of the following is met:

(i) From the start of the application in an enclosed space production area until the end of any restricted-entry interval, the worker will not enter any part of the entire enclosed structure or space.

(ii) From the start of the application to an outdoor production area until the end of any restricted-entry interval, the worker will not enter, work in, remain in, or pass on foot through the treated area or any area within 1/4-mile of the treated area on the agricultural establishment.

(iii) The worker was involved in the application of the pesticide as a handler, and is aware of all information required by paragraph (c)(1) of this section.

Note: Workers must be notified if they will be working in or passing through unprotected areas within 1/4-mile (1320 ft.) of the outdoor application site.

(b) Requirements for posted warning signs. If notification by posted warning signs is required pursuant to paragraph (a) of this section, the agricultural employer must, unless otherwise prescribed by the label, ensure that all warning signs meet the requirements of this paragraph. When several contiguous areas are to be treated with pesticides on a rotating or sequential basis, the entire area may be posted. Worker entry is prohibited for the entire area while the signs are posted, except for entry permitted by Sec. 170.603 of this part.

(1) General. The warning signs must meet all of the following requirements:

(i) Be one of the three sizes specified in paragraph (b)(3) of this section and comply with the posting placement and spacing requirements applicable to that sign size.

(ii) Be posted prior to but no earlier than 24 hours before the scheduled application of the pesticide.

(iii) Remain posted throughout the application and any restricted-entry interval.

(iv) Be removed or covered within three days after the end of the application or any restricted-entry interval, whichever is later, except that signs may remain posted after the restricted-entry interval has expired as long as all of the following conditions are met:

(A) The agricultural employer instructs any workers on the establishment that may come within 1/4-mile of the treated area not to enter that treated area while the signs are posted.

(B) The agricultural employer ensures that workers do not enter the treated area while the signs remain posted, other than entry permitted by Sec. 170.603 of this part.

(v) Remain visible and legible during the time they are required to be posted.

(2) Content.

(i) The warning sign must have a white background. The words “DANGER” and “PELIGRO,” plus “PESTICIDES” and “PESTICIDAS,” must be at the top of the sign, and the words “KEEP OUT” and “NO ENTRE” must be at the bottom of the sign. Letters for all words must be clearly legible. A circle containing an upraised hand on the left and a stern face on the right must be near the center of the sign. The inside of the circle must be red, except that the hand and a large portion of the face must be in white. The length of the hand must be at least twice the height of the smallest letters. The length of the face must be only slightly smaller than the hand. Additional information such as the name of the pesticide and the date of application may appear on the warning sign if it does not detract from the size and appearance of the sign or change the meaning of the required information. An example of a warning sign meeting these requirements, other than the size and color requirements, follows:

DANGER PELIGRO
PESTICIDES PESTICIDAS
KEEP OUT
NO ENTRE

(ii) The agricultural employer may replace the Spanish language portion of the warning sign with equivalent terms in an alternative non-English language if that alternative language is the language read by the largest group of workers at that agricultural establishment who do not read English. The alternative language sign must be in the same format as the original sign and conform to all other requirements of paragraph (b)(2)(i) of this section.

(3) Size and posting.

(i) The standard sign must be at least 14 inches by 16 inches with letters at least one inch in height.

(ii) When posting an outdoor production area using the standard sign, the signs must be visible from all reasonably expected points of worker entry to the treated area, including at least each access road, each border with any worker housing area within 100 feet of the treated area and each footpath and other walking route that enters the treated area. Where there are no reasonably expected points of worker entry, signs must be posted in the corners of the treated area or in any other location affording maximum visibility.

(iii) When posting an enclosed space production area using the standard sign and the entire structure or space is subject to the labeling-specified restricted-entry interval and the post-application entry restrictions specified in Sec. 170.407, the signs must be posted so they are visible from all reasonably expected points of worker entry to the structure or space. When posting treated areas in enclosed space production using the standard sign and the treated area only comprises a subsection of the structure or space, the signs must be posted so they are visible from all reasonably expected points of worker entry to the treated area including each aisle or other walking route that enters the treated area. Where there are no reasonably expected points of worker entry to the treated area, signs must be posted in the corners of the treated area or in any other location affording maximum visibility.

(iv) If a smaller warning sign is used with “DANGER” and “PELIGRO” in letters at least 7/8 inch in height and the remaining letters at least 1/2 inch in height and a red circle at least three inches in diameter containing an upraised hand and a stern face, the signs must be posted no farther than 50 feet apart around the perimeter of the treated area in addition to the locations specified in paragraphs (b)(3)(ii) or (b)(3)(iii) of this section.

(v) If a smaller sign is used with “DANGER” and “PELIGRO” in letters at least 7/16 inch in height and the remaining letters at least 1/4 inch in height and a red circle at least one and a half inches in diameter containing an upraised hand and a stern face, the signs must be posted no farther than 25 feet apart around the perimeter of the treated area in addition to the locations specified in paragraphs (b)(3)(ii) or (b)(3)(iii) of this section.

(vi) A sign with “DANGER” and “PELIGRO” in letters less than 7/16 inch in height or with any words in letters less than 1/4 inch in height or a red circle smaller than one and a half inches in diameter containing an upraised hand and a stern face will not satisfy the requirements of the rule.

(c) Oral warnings – Requirement. If oral notification is required pursuant to paragraph (a) of this section, the agricultural employer must provide oral warnings to workers in a manner that the workers can understand. If a worker will be on the establishment when an application begins, the warning must be given before the application begins. If a worker arrives on the establishment while an application is taking place or a restricted-entry interval for a pesticide application is in effect, the warning must be given at the beginning of the worker's work period. The warning must include all of the following:

(1) The location(s) and description of any treated area(s) subject to the entry restrictions during and after application specified in Sec. 170.405 and 170.407.

(2) The dates and times during which entry is restricted in any treated area(s) subject to the entry restrictions during and after application specified in Sec. 170.405 and 170.407.

(3) Instructions not to enter the treated area or an application exclusion zone during application, and that entry to the treated area is not allowed until the restricted-entry interval has expired and all treated area warning signs have been removed or covered, except for entry permitted by Sec. 170.603 of this part.

Note: Oregon OSHA did not adopt 170.405(a) Outdoor production pesticide applications. OAR 437-004-6405, when adopted, will apply instead.

Stat. Auth.: ORS 654.025(2) and 656.726(4).
Stats. Implemented: ORS 654.001 – 654.295, 654.750 – 654.780.
Hist.: OR-OSHA Admin. Order 1-2017, f. 2/14/17, ef. 1/1/18.

170.411 Decontamination supplies for workers

(a) Requirement. The agricultural employer must provide decontamination supplies for routine washing and emergency decontamination in accordance with this section for any worker on an agricultural establishment who is performing an activity in an area where a pesticide was applied and who contacts anything that has been treated with the pesticide, including, but not limited to, soil, water, and plants.

(b) Materials and quantities. The decontamination supplies required in paragraph (a) of this section must include at least 1 gallon of water per worker at the beginning of each worker's work period for routine washing and emergency decontamination, soap, and single-use towels. The supplies must meet all of the following requirements:

(1) Water. At all times when this part requires agricultural employers to make water available to workers, the agricultural employer must ensure that it is of a quality and temperature that will not cause illness or injury when it contacts the skin or eyes or if it is swallowed. If a water source is used for mixing pesticides, it must not be used for decontamination, unless equipped with properly functioning valves or other mechanisms that prevent contamination of the water with pesticides, such as anti-backflow siphons, one-way or check valves, or an air gap sufficient to prevent contamination.

(2) Soap and single-use towels. The agricultural employer must provide soap and single-use towels for drying in quantities sufficient to meet the workers' reasonable needs. Hand sanitizing gels and liquids or wet towelettes do not meet the requirement for soap. Wet towelettes do not meet the requirement for single-use towels.

(c) Timing.

(1) If any pesticide with a restricted-entry interval greater than four hours was applied, the decontamination supplies must be provided from the time workers first enter the treated area until at least 30 days after the restricted-entry interval expires.

(2) If the only pesticides applied in the treated area are products with restricted-entry intervals of four hours or less, the decontamination supplies must be provided from the time workers first enter the treated area until at least seven days after the restricted-entry interval expires.

(d) Location. The decontamination supplies must be located together outside any treated area or area subject to a restricted-entry interval, and must be reasonably accessible to the workers. The decontamination supplies must not be more than 1/4 mile from where workers are working, except that where workers are working more than 1/4 mile from the nearest place of vehicular access or more than 1/4 mile from any non-treated area, the decontamination supplies may be at the nearest place of vehicular access outside any treated area or area subject to a restricted-entry interval.

Stat. Auth.: ORS 654.025(2) and 656.726(4).
Stats. Implemented: ORS 654.001 – 654.295, 654.750 – 654.780.
Hist.: OR-OSHA Admin. Order 1-2017, f. 2/14/17, ef. 1/1/18.

Subpart F--Requirements for Protection of Agricultural Pesticide Handlers

170.501 Training requirements for handlers

(a) General requirement. Before any handler performs any handler activity involving a pesticide product, the handler employer must ensure that the handler has been trained in accordance with this section within the last 12 months, except as provided in paragraph (b) of this section.

(b) Exceptions. The following handlers need not be trained under this section:

(1) A handler who is currently certified as an applicator of restricted use pesticides under part 171 of this chapter.

Note: Part 171 of Chapter 40 CFR is about the certification of pesticide applicators; in Oregon, it is administered by the Oregon Department of Agriculture.

(2) A handler who is certified or licensed as a crop advisor by a program acknowledged as appropriate in writing by EPA or the State or Tribal agency responsible for pesticide enforcement, provided that a requirement for such certification or licensing is pesticide safety training that includes all the topics set out in Sec. 170.501(c)(2) or Sec. 170.501(c)(3) as applicable depending on the date of training.

Note: See OAR 437-004-6501(1)

(c) Training programs.

Note: Training deficiencies in the Oregon-specific rule requirements related to the Worker Protection Standard such as the Hazard Communication Standard, the Respiratory Protection Standard, and the Personal Protective Equipment rules will be cited from the applicable Oregon OSHA rule.

(1) Pesticide safety training must be presented to handlers either orally from written materials or audio-visually, at a location that is reasonably free from distraction and conducive to training. All training materials must be EPA-approved. The training must be presented in a manner that the handlers can understand, such as through a translator. The training must be conducted by a person who meets the handler trainer requirements of paragraph (c)(4) of this section, and who must be present during the entire training program and must respond to handlers' questions.

Note: Oregon OSHA did not adopt 170.501(c)(2) or (3). OAR 437-004-6501 applies instead.

437-004-6501 Handler training programs in Oregon

(1) Handlers using an exception to the training requirements for crop advisors – as described in 170.501(b)(2) of the Worker Protection Standard – must demonstrate that the program includes all the topics listed in OAR 437-004-6501(2).

(2) Training programs for handlers must include, at a minimum, all of the following topics:

(a) All the topics required by OAR 437-004-6401. Training program for workers.

(b) Information on proper application and use of pesticides.

(c) Handlers must follow the portions of the labeling applicable to the safe use of the pesticide.

(d) Format and meaning of information contained on pesticide labels and in labeling applicable to the safe use of the pesticide.

(e) Need for and appropriate use and removal of all personal protective equipment.

(f) How to recognize, prevent, and provide first aid treatment for heat-related illness.

(g) Safety requirements for handling, transporting, storing, and disposing of pesticides, including general procedures for spill cleanup.

(h) Environmental concerns, such as drift, runoff, and wildlife hazards.

(i) Handlers must not apply pesticides in a manner that results in contact with workers or other persons.

(j) The responsibility of handler employers to provide handlers with information and protections designed to reduce work-related pesticide exposures and illnesses. This includes providing, cleaning, maintaining, storing, and ensuring proper use of all required personal protective equipment; providing decontamination supplies; and providing specific information about pesticide use and labeling information.

(k) Handlers must suspend a pesticide application if workers or other persons are in the application exclusion zone.

(l) Handlers must be at least 18 years old.

(m) The responsibility of handler employers to ensure handlers have received respirator fit-testing, training and medical evaluation if they are required to wear a respirator by the product labeling.

(n) The responsibility of agricultural employers to post treated areas as required by this rule.

Stat. Auth.: ORS 654.025(2) and 656.726(4).
Stats. Implemented: ORS 654.001 – 654.295, 654.750 – 654.780.
Hist.: OR-OSHA Admin. Order 1-2017, f. 2/14/17, ef. 1/1/18.

170.501 (c)(4) The person who conducts the training must have one of the following qualifications:

(i) Be designated as a trainer of certified applicators or pesticide handlers by EPA or the State or Tribal agency responsible for pesticide enforcement.

(ii) Have completed an EPA-approved pesticide safety train-the-trainer program for trainers of handlers.

(iii) Be currently certified as an applicator of restricted use pesticides under part 171 of this chapter.

Note: Part 171 of Chapter 40 CFR concerns the certification of pesticide applicators; in Oregon, it is administered by the Oregon Department of Agriculture.

437-004-6502 Oregon requirements for Worker Protection Standard trainers of handlers who qualify using train-the-trainer programs

(1) Beginning on January 1, 2018, trainers of handlers who use the train-the-trainer (T-t-T) qualification described in 170.501(c)(4)(ii) must complete a T-t-T program at least once every five years, using training materials approved by EPA for that purpose.

(2) In order to meet this requirement, persons using this qualification are responsible for maintaining a record of their training, to include the following details about their most recent completion of a T-t-T program: the date(s), location, and the EPA reference number of the training materials that were used.

Stat. Auth.: ORS 654.025(2) and 656.726(4).
Stats. Implemented: ORS 654.001 – 654.295, 654.750 – 654.780.
Hist.: OR-OSHA Admin. Order 1-2017, f. 2/14/17, ef. 1/1/18.

170.501 (d) Recordkeeping

(1) Handler employers must maintain records of training for handlers employed by their establishment for two years after the date of the training. The records must be maintained on the establishment and must include all of the following information:

(i) The trained handler's printed name and signature.

(ii) The date of the training.

(iii) Information identifying which EPA-approved training materials were used.

(iv) The trainer's name and documentation showing that the trainer met the requirements of Sec. 170.501(c)(4) at the time of training.

(v) The handler employer's name.

(2) The handler employer must, upon request by a handler trained on the establishment, provide to the handler a copy of the record of the training that contains the information required under Sec. 170.501 (d)(1).

Stat. Auth.: ORS 654.025(2) and 656.726(4).
Stats. Implemented: ORS 654.001 – 654.295, 654.750 – 654.780.
Hist.: OR-OSHA Admin. Order 1-2017, f. 2/14/17, ef. 1/1/18.

170.503 Knowledge of labeling, application-specific, and establishment-specific information for handlers

(a) Knowledge of labeling and application-specific information.

(1) The handler employer must ensure that before any handler performs any handler activity involving a pesticide product, the handler either has read the portions of the labeling applicable to the safe use of the pesticide or has been informed in a manner the handler can understand of all labeling requirements and use directions applicable to the safe use of the pesticide.

(2) The handler employer must ensure that the handler has access to the applicable product labeling at all times during handler activities.

(3) The handler employer must ensure that the handler is aware of requirements for any entry restrictions, application exclusion zones and restricted-entry intervals as described in Sec. 170.405 and 170.407 that may apply based on the handler's activity.

Note: Oregon OSHA did not adopt 170.405(a). OAR 437-004-6405, when adopted, will apply instead.

(b) Knowledge of establishment-specific information. Before any handler performs any handler activity on an agricultural establishment where within the last 30 days a pesticide product has been used, or a restricted-entry interval for such pesticide has been in effect, the handler employer must ensure that the handler has been informed, in a manner the handler can understand, all of the following establishment-specific information:

(1) The location of pesticide safety information required by Sec. 170.311(a).

(2) The location of pesticide application and hazard information required by Sec. 170.311(b).

(3) The location of decontamination supplies required by Sec. 170.509.

Stat. Auth.: ORS 654.025(2) and 656.726(4).
Stats. Implemented: ORS 654.001 – 654.295, 654.750 – 654.780.
Hist.: OR-OSHA Admin. Order 1-2017, f. 2/14/17, ef. 1/1/18.

170.505 Requirements during applications to protect handlers, workers, and other persons

(a) Prohibition from contacting workers and other persons with pesticides during application. The handler employer and the handler must ensure that no pesticide is applied so as to contact, directly or through drift, any worker or other person, other than an appropriately trained and equipped handler involved in the application.

(b) Suspending applications. After January 1, 2018, the handler performing the application must immediately suspend a pesticide application if any worker or other person, other than an appropriately trained and equipped handler involved in the application, is in the application exclusion zone described in Sec. 170.405(a)(1) or the area specified in column B of the Table in Sec. 170.405(b)(4).

Note: Oregon OSHA did not adopt 170.405(a) Outdoor production pesticide applications. OAR 437-004-6405, when adopted, will apply instead.

(c) Handlers using highly toxic pesticides. The handler employer must ensure that any handler who is performing any handler activity with a pesticide product that has the skull-and-crossbones symbol on the front panel of the pesticide product label is monitored visually or by voice communication at least every two hours.

(d) Fumigant applications in enclosed space production. The handler employer must ensure all of the following:

(1) Any handler in an enclosed space production area during a fumigant application maintains continuous visual or voice contact with another handler stationed immediately outside of the enclosed space.

(2) The handler stationed outside the enclosed space has immediate access to and uses the personal protective equipment required by the fumigant labeling for applicators in the event that entry becomes necessary for rescue.

Stat. Auth.: ORS 654.025(2) and 656.726(4).
Stats. Implemented: ORS 654.001 – 654.295, 654.750 – 654.780.
Hist.: OR-OSHA Admin. Order 1-2017, f. 2/14/17, ef. 1/1/18.

170.507 Personal protective equipment

Note: In Oregon, to the extent that the applicable Personal Protective Equipment (PPE) requirements are more protective than the label PPE requirements, they will apply. For employers subject to the Division 4 rules, Division 4/I, OAR 437 004-1005 through -1035 and -1050 through -1075 apply. For employers subject to the Division 2 rules, Division 2/I, OAR 437-002-0134 applies. For employers subject to the Division 7 rules, Division 7/D, OAR 437-007-0300 through 0330 apply.

(a) Handler responsibilities. Any person who performs handler activities involving a pesticide product must use the clothing and personal protective equipment specified on the pesticide product labeling for use of the product, except as provided in Sec. 170.607 of this part.

(b) Employer responsibilities for providing personal protective equipment. The handler employer must provide to the handler the personal protective equipment required by the pesticide product labeling in accordance with this section. The handler employer must ensure that the personal protective equipment is clean and in proper operating condition. For the purposes of this section, long-sleeved shirts, short-sleeved shirts, long pants, short pants, shoes, and socks are not considered personal protective equipment, although such work clothing must be worn if required by the pesticide product labeling.

(1) If the pesticide product labeling requires that “chemical-resistant'” personal protective equipment be worn, it must be made of material that allows no measurable movement of the pesticide being used through the material during use.

(2) If the pesticide product labeling requires that "waterproof'" personal protective equipment be worn, it must be made of material that allows no measurable movement of water or aqueous solutions through the material during use.

(3) If the pesticide product labeling requires that a "chemical-resistant suit" be worn, it must be a loose-fitting, one- or two-piece chemical-resistant garment that covers, at a minimum, the entire body except head, hands, and feet.

(4) If the pesticide product labeling requires that "coveralls" be worn, they must be loose-fitting, one- or two-piece garments that cover, at a minimum, the entire body except head, hands, and feet.

(5) Gloves must be the type specified on the pesticide product labeling.

(i) Gloves made of leather, cotton, or other absorbent materials may not be worn while performing handler activities unless gloves made of these materials are listed as acceptable for such use on the pesticide product labeling.

(ii) Separable glove liners may be worn beneath chemical-resistant gloves, unless the pesticide product labeling specifically prohibits their use. Separable glove liners are defined as separate glove-like hand coverings, made of lightweight material, with or without fingers. Work gloves made from lightweight cotton or poly-type material are considered to be glove liners if worn beneath chemical-resistant gloves. Separable glove liners may not extend outside the chemical-resistant gloves under which they are worn. Chemical-resistant gloves with non-separable absorbent lining materials are prohibited.

(iii) If used, separable glove liners must be discarded immediately after a total of no more than 10 hours of use or within 24 hours of when first put on, whichever comes first. The liners must be replaced immediately if directly contacted by pesticide. Used glove liners must not be reused. Contaminated liners must be disposed of in accordance with any Federal, State, or local regulations.

(6) If the pesticide product labeling requires that "chemical-resistant footwear" be worn, one of the following types of footwear must be worn:

(i) Chemical-resistant shoes.

(ii) Chemical-resistant boots.

(iii) Chemical-resistant shoe coverings worn over shoes or boots.

Note: See exception in 170.607(b).

(7) If the pesticide product labeling requires that "protective eyewear" be worn, one of the following types of eyewear must be worn:

(i) Goggles.

(ii) Face shield.

(iii) Safety glasses with front, brow, and temple protection.

(iv) Full-face respirator.

Note: Oregon employers must choose the type of protective eyewear that will effectively protect their employees from the specific type of hazard for that handling activity. Signal words from the pesticide product label can provide general guidelines to use in that evaluation.

Table 2 - General guideline for minimum eye protection

Product Signal Word	General guideline for minimum eye protection
Caution	Safety glasses with front, brow, and temple protection that is specified by the manufacturer for use against chemical splash. OR Full face respirator (if used in combination with required respiratory protection)
Warning	Safety glasses with front, brow, and temple protection that is specified by the manufacturer for use against chemical splash PLUS a Face shield; OR Chemical splash goggles OR Full face respirator (if used in combination with required respiratory protection)
Danger	Chemical splash goggles OR Full face respirator (if used in combination with required respiratory protection)

(8) If the pesticide product labeling requires that a "chemical-resistant apron" be worn, a chemical-resistant apron that covers the front of the body from mid-chest to the knees must be worn.

(9) If the pesticide product labeling requires that "chemical-resistant headgear" be worn, it must be either a chemical-resistant hood or a chemical-resistant hat with a wide brim.

Note: Oregon OSHA did not adopt 170.507(b)(10). OAR 437-004-6508, Respiratory Protection applies instead. Also see requirements in 170.507(d)(5) and (d)(6) for replacement and maintenance requirements related to respiratory protection.

437-004-6508 Respiratory Protection

Whenever a respirator is required by the pesticide product labeling, the handler employer must ensure that the respirator specified on the label is used and that requirements of the Respiratory Protection Standard that applies to them are met before allowing the handler to perform any activity where the respirator is required to be worn. For employers subject to the Division 4 rules, Division 4/I, OAR 438-004-1041 applies, except for Paragraph (4) Selection of respirators. For employers subject to the Division 2 and/ or the Division 7 rules, Division 2/I, 1910.134 applies, except for Paragraph (d) Selection of respirators.

Stat. Auth.: ORS 654.025(2) and 656.726(4).
Stats. Implemented: ORS 654.001 – 654.295, 654.750 – 654.780.
Hist.: OR-OSHA Admin. Order 1-2017, f. 2/14/17, ef. 1/1/18.

170.507 (c) Use of personal protective equipment

(1) The handler employer must ensure that personal protective equipment is used correctly for its intended purpose and is used according to the manufacturer's instructions.

(2) The handler employer must ensure that, before each day of use, all personal protective equipment is inspected for leaks, holes, tears, or worn places, and any damaged equipment is repaired or discarded.

(d) Cleaning and maintenance.

(1) The handler employer must ensure that all personal protective equipment is cleaned according to the manufacturer's instructions or pesticide product labeling instructions before each day of reuse. In the absence of any such instructions, it must be washed thoroughly in detergent and hot water.

(2) If any personal protective equipment cannot or will not be cleaned properly, the handler employer must ensure the contaminated personal protective equipment is made unusable as apparel or is made unavailable for further use by employees or third parties. The contaminated personal protective equipment must be disposed of in accordance with any applicable laws or regulations. Coveralls or other absorbent materials that have been drenched or heavily contaminated with a pesticide that has the signal word “DANGER” or “WARNING” on the label must not be reused and must be disposed of as specified in this paragraph. Handler employers must ensure that any person who handles contaminated personal protective equipment described in this paragraph wears the gloves specified on the pesticide product labeling for mixing and loading the product(s) comprising the contaminant(s) on the equipment. If two or more pesticides are included in the contaminants, the gloves worn must meet the requirements for mixing and loading all of the pesticide products.

(3) The handler employer must ensure that contaminated personal protective equipment is kept separate from non-contaminated personal protective equipment, other clothing or laundry and washed separately from any other clothing or laundry.

(4) The handler employer must ensure that all washed personal protective equipment is dried thoroughly before being stored or reused.

(5) The handler employer must ensure that all clean personal protective equipment is stored separately from personal clothing and apart from pesticide-contaminated areas.

(6) The handler employer must ensure that when filtering facepiece respirators are used, they are replaced when one of the following conditions is met:

(i) When breathing resistance becomes excessive.

(ii) When the filter element has physical damage or tears.

(iii) According to manufacturer's recommendations or pesticide product labeling, whichever is more frequent.

(iv) In the absence of any other instructions or indications of service life, at the end of eight hours of cumulative use.

(7) The handler employer must ensure that when gas- or vapor-removing respirators are used, the gas- or vapor-removing canisters or cartridges are replaced before further respirator use when one of the following conditions is met:

(i) At the first indication of odor, taste, or irritation.

Note: Oregon OSHA did not adopt (d)(7)(ii) as an option. However, the use of an End of Service Life Indicator, when available for the specific air contaminant, is an acceptable method for determining the proper cartridge replacement time for a gas or vapor-removing respirator.

(iii) When breathing resistance becomes excessive.

(iv) When required according to manufacturer's recommendations or pesticide product labeling instructions, whichever is more frequent.

(v) In the absence of any other instructions or indications of service life, at the end of eight hours of cumulative use.

(8) The handler employer must inform any person who cleans or launders personal protective equipment of all the following:

(i) That such equipment may be contaminated with pesticides and there are potentially harmful effects from exposure to pesticides.

(ii) The correct way(s) to clean personal protective equipment and how to protect themselves when handling such equipment.

(iii) Proper decontamination procedures that should be followed after handling contaminated personal protective equipment.

(9) The handler employer must ensure that handlers have a place(s) away from pesticide storage and pesticide use areas where they may do all of the following:

(i) Store personal clothing not worn during handling activities.

(ii) Put on personal protective equipment at the start of any exposure period.

(iii) Remove personal protective equipment at the end of any exposure period.

(10) The handler employer must not allow or direct any handler to wear home or to take home employer-provided personal protective equipment contaminated with pesticides.

(e) Heat-related illness. Where a pesticide's labeling requires the use of personal protective equipment for a handler activity, the handler employer must take appropriate measures to prevent heat-related illness.

Stat. Auth.: ORS 654.025(2) and 656.726(4).
Stats. Implemented: ORS 654.001 – 654.295, 654.750 – 654.780.
Hist.: OR-OSHA Admin. Order 1-2017, f. 2/14/17, ef. 1/1/18.

170.509 Decontamination and eye flushing supplies for handlers

(a) Requirement. The handler employer must provide decontamination and eye flushing supplies in accordance with this section for any handler that is performing any handler activity or removing personal protective equipment at the place for changing required by Sec. 170.507(d)(9).

(b) General conditions. The decontamination supplies required in paragraph (a) of this section must include: at least three gallons of water per handler at the beginning of each handler's work period for routine washing and potential emergency decontamination; soap; single-use towels; and clean clothing for use in an emergency. The decontamination and eye flushing supplies required in paragraph (a) of this section must meet all of the following requirements:

(1) Water. At all times when this section requires handler employers to make water available to handlers for routine washing, emergency decontamination or eye flushing, the handler employer must ensure that it is of a quality and temperature that will not cause illness or injury when it contacts the skin or eyes or if it is swallowed. If a water source is used for mixing pesticides, it must not be used for decontamination or eye flushing supplies, unless equipped with properly functioning valves or other mechanisms that prevent contamination of the water with pesticides, such as anti-backflow siphons, one-way or check valves, or an air gap sufficient to prevent contamination.

(2) Soap and single-use towels. The handler employer must provide soap and single-use towels for drying in quantities sufficient to meet the handlers' needs. Hand sanitizing gels and liquids or wet towelettes do not meet the requirement for soap. Wet towelettes do not meet the requirement for single-use towels.

(3) Clean change of clothing. The handler employer must provide one clean change of clothing, such as coveralls, for use in an emergency.

(c) Location. The decontamination supplies must be located together outside any treated area or area subject to a restricted-entry interval, and must be reasonably accessible to each handler during the handler activity. The decontamination supplies must not be more than 1/4 mile from the handler, except that where the handler activity is more than 1/4 mile from the nearest place of vehicular access or more than 1/4 mile from any non-treated area, the decontamination supplies may be at the nearest place of vehicular access outside any treated area or area subject to a restricted-entry interval.

(1) Mixing sites. Decontamination supplies must be provided at any mixing site.

(2) Exception for pilots. Decontamination supplies for a pilot who is applying pesticides aerially must be in the aircraft or at the aircraft loading site.

(3) Exception for treated areas. The decontamination supplies must be outside any treated area or area subject to a restricted-entry interval, unless the soap, single-use towels, water and clean change of clothing are protected from pesticide contamination in closed containers.

Note: Oregon did not adopt 170.509(d). OAR 437-004-6509 applies instead.

Stat. Auth.: ORS 654.025(2) and 656.726(4).
Stats. Implemented: ORS 654.001 – 654.295, 654.750 – 654.780.
Hist.: OR-OSHA Admin. Order 1-2017, f. 2/14/17, ef. 1/1/18.

437-004-6509 Emergency eye-washes and eye flushing supplies

(1) Whenever a handler is mixing or loading a pesticide product whose labeling includes the signal word "Danger" or "Danger/Poison," due to toxicity to the eye or the possibility of permanent eye damage; or, a handler is mixing or loading any pesticide using a closed system operating under pressure, the employer must provide at each mixing/loading site available to the handler at least one eye-wash system that meets the applicable eyewash requirements. For employers subject to the Division 4 rules, Division 4/K, OAR 437-004-1305(5) applies. For employers subject to the Division 2 and/or Division 7 rules, Division 2/K, OAR 437-002-0161 applies.

(2) Whenever a handler is applying a pesticide product whose labeling requires protective eyewear for handlers, the handler employer must provide at least one pint of water per handler in portable containers that are immediately available to each handler.

Note: *The eye-wash rules referenced include the following minimum requirements:*

- *Locate the eye-wash so that exposed employees can reach it and begin treatment in 10 seconds or less. The path must be unobstructed and cannot require the opening of doors or passage through obstacles unless other employees are always present to help the exposed employee.*
- *Install the equipment according to the manufacturer's instructions.*
- *Follow the equipment manufacturer's criteria for water pressure, flow rate and testing to ensure proper operation of the system.*
- *Eye-wash water must flow for at least 15 minutes.*
- *The eyewash must have valves that stay open without the use of the hands.*
- *The water to the equipment must not be subject to unauthorized shut-off.*
- *If eyewash facilities can freeze, take protective measures to prevent freezing.*
- *Equipment must be clean, sanitary and operating correctly.*
- *In self-contained systems, do not use solutions or products past their expiration date.*

Stat. Auth.: ORS 654.025(2) and 656.726(4).
Stats. Implemented: ORS 654.001 – 654.295, 654.750 – 654.780.
Hist.: OR-OSHA Admin. Order 1-2017, f. 2/14/17, ef. 1/1/18.

Subpart G--Exemptions, Exceptions and Equivalency

170.601 Exemptions

(a) Exemption for owners of agricultural establishments and their immediate families.

(1) On any agricultural establishment where a majority of the establishment is owned by one or more members of the same immediate family, the owner(s) of the establishment are not required to provide the protections of the following provisions to themselves or members of their immediate family when they are performing handling activities or tasks related to the production of agricultural plants that would otherwise be covered by this part on their own agricultural establishment.

(i) Section 170.309(c).

(ii) Section 170.309(f) through (j).

(iii) Section 170.311.

(iv) Section 170.401.

(v) Section 170.403.

(vi) Section 170.409.

(vii) Sections 170.411 and 170.509.

(viii) Section 170.501.

(ix) Section 170.503.

(x) Section 170.505(c) and (d).

(xi) Section 170.507(c) through (e).

(xii) Section 170.605(a) through (c) and (e) through (j).

(2) The owners of agricultural establishments must provide all of the applicable protections required by this part for any employees or other persons on the establishment that are not members of their immediate family.

(b) Exemption for certified crop advisors. Certified crop advisors may make their own determination for the appropriate personal protective equipment for entry into a treated area during a restricted-entry interval and substitute their self-determined set of personal protective equipment for the labeling-required personal protective equipment, and the requirements of Sec. 170.309(e), 170.309(f), 170.313(k), 170.503(a), 170.507 and 170.509 of this part do not apply to certified crop advisors provided the application is complete and all of the following conditions are met:

(1) The crop advisor is certified or licensed as a crop advisor by a program acknowledged as appropriate in writing by EPA or a State or Tribal agency responsible for pesticide enforcement.

(2) The certification or licensing program requires pesticide safety training that includes all the information in Sec. 170.501(c)(2) or Sec. 170.501(c)(3) as applicable depending on the date of training.

(3) The crop advisor who enters a treated area during a restricted-entry interval only performs crop advising tasks while in the treated area.

Note: Oregon OSHA did not adopt 170.501(c)(2) or (3). OAR 437-004-6501 applies instead. Certified crop advisors using the conditions of exemption described in 170.601(b) of the Worker Protection Standard must ensure that the pesticide safety training described in (b)(2) includes all the information listed in OAR 437-004-6501.

Stat. Auth.: ORS 654.025(2) and 656.726(4).
Stats. Implemented: ORS 654.001 – 654.295, 654.750 – 654.780.
Hist.: OR-OSHA Admin. Order 1-2017, f. 2/14/17, ef. 1/1/18.

170.603 Exceptions for entry by workers during restricted-entry intervals

An agricultural employer may direct workers to enter treated areas where a restricted-entry interval is in effect to perform certain activities as provided in this section, provided that the agricultural employer ensures all of the applicable conditions of this section and Sec. 170.605 of this part are met.

(a) Exception for activities with no contact. A worker may enter a treated area during a restricted-entry interval if the agricultural employer ensures that all of the following conditions are met:

(1) The worker will have no contact with anything that has been treated with the pesticide to which the restricted-entry interval applies, including, but not limited to, soil, water, air, or surfaces of plants. This exception does not allow workers to perform any activities that involve contact with treated surfaces even if workers are wearing personal protective equipment.

(2) No such entry is allowed until any inhalation exposure level listed in the pesticide product labeling has been reached or any ventilation criteria required by Sec. 170.405(b)(3) or the pesticide product labeling have been met.

(b) Exception for short-term activities. A worker may enter a treated area during a restricted-entry interval for short-term activities, if the agricultural employer ensures that all of the following requirements are met:

(1) No hand labor activity is performed.

(2) The time in treated areas where a restricted-entry interval is in effect does not exceed one hour in any 24-hour period for any worker.

(3) No such entry is allowed during the first 4 hours after the application ends.

(4) No such entry is allowed until any inhalation exposure level listed in the pesticide product labeling has been reached or any ventilation criteria required by Sec. 170.405(b)(3) or the pesticide product labeling have been met.

(c) Exception for an agricultural emergency.

(1) An agricultural emergency means a sudden occurrence or set of circumstances that the agricultural employer could not have anticipated and over which the agricultural employer has no control, that requires entry into a treated area during a restricted-entry interval, and when no alternative practices would prevent or mitigate a substantial economic loss. A substantial economic loss means a loss in profitability greater than that which would be expected based on the experience and fluctuations of crop yields in previous years. Only losses caused by the agricultural emergency specific to the affected site and geographic area are considered. Losses resulting from mismanagement cannot be included when determining whether a loss is substantial.

(2) A worker may enter a treated area where a restricted-entry interval is in effect in an agricultural emergency to perform tasks necessary to mitigate the effects of the agricultural emergency, including hand labor tasks, if the agricultural employer ensures that all the following criteria are met:

(i) The State department of agriculture, or the State or Tribal agency responsible for pesticide enforcement declares an agricultural emergency that applies to the treated area, or agricultural employer has determined that the circumstances within the treated area are the same as circumstances the State department of agriculture, or the State or Tribal agency responsible for pesticide enforcement has previously determined would constitute an agricultural emergency.

(ii) The agricultural employer determines that the agricultural establishment is subject to the circumstances that result in an agricultural emergency meeting the criteria of paragraph (c)(1) of this section.

(iii) If the labeling of any pesticide product applied to the treated area requires workers to be notified of the location of treated areas by both posting and oral notification, then the agricultural employer must ensure that no individual worker spends more than four hours out of any 24-hour period in treated areas where such a restricted-entry interval is in effect.

(iv) No such entry is allowed during the first 4 hours after the application ends.

(v) No such entry is allowed until any inhalation exposure level listed in the pesticide product labeling has been reached or any ventilation criteria required by Sec. 170.405(b)(3) or the pesticide product labeling have been met.

(d) Exceptions for limited contact and irrigation activities. A worker may enter a treated area during a restricted-entry interval for limited contact or irrigation activities, if the agricultural employer ensures that all of the following requirements are met:

(1) No hand labor activity is performed.

(2) No worker is allowed in the treated area for more than eight hours in a 24-hour period.

(3) No such entry is allowed during the first 4 hours after the application ends.

(4) No such entry is allowed until any inhalation exposure level listed in the pesticide product labeling has been reached or any ventilation criteria required by Sec. 170.405(b)(3) or the pesticide product labeling have been met.

(5) The task is one that, if not performed before the restricted-entry interval expires, would cause substantial economic loss, and there are no alternative tasks that would prevent substantial loss.

(6) With the exception of irrigation tasks, the need for the task could not have been foreseen.

(7) The worker has no contact with pesticide-treated surfaces other than minimal contact with feet, lower legs, hands, and forearms.

(8) The labeling of the pesticide product that was applied does not require that workers be notified of the location of treated areas by both posting and oral notification.

Stat. Auth.: ORS 654.025(2) and 656.726(4).
Stats. Implemented: ORS 654.001 – 654.295, 654.750 – 654.780.
Hist.: OR-OSHA Admin. Order 1-2017, f. 2/14/17, ef. 1/1/18.

170.605 Agricultural employer responsibilities to protect workers entering treated areas during a restricted-entry interval

Note: In Oregon, to the extent that the applicable Personal Protective Equipment (PPE) requirements are more protective than the label PPE requirements, they will apply. For employers subject to the Division 4 rules, Division 4/I, OAR 437 004-1005 through -1035 and -1050 through -1075 apply. For employers subject to the Division 2 rules, Division 2/I, OAR 437-002-0134 applies. For employers subject to the Division 7 rules, Division 7/D, OAR 437-007-0300 through 0330 apply.

If an agricultural employer directs a worker to perform activities in a treated area where a restricted-entry interval is in effect, all of the following requirements must be met:

(a) The agricultural employer must ensure that the worker is at least 18 years old.

(b) Prior to early entry, the agricultural employer must provide to each early-entry worker the information described in paragraphs (b)(1) through (8) of this section. The information must be provided orally in a manner that the worker can understand.

(1) Location of early-entry area where work activities are to be performed.

(2) Pesticide(s) applied.

(3) Dates and times that the restricted-entry interval begins and ends.

(4) Which exception in Sec. 170.603 is the basis for the early entry, and a description of tasks that may be performed under the exception.

(5) Whether contact with treated surfaces is permitted under the exception.

(6) Amount of time the worker is allowed to remain in the treated area.

(7) Personal protective equipment required by the pesticide product labeling for early entry.

(8) Location of the pesticide safety information required by Sec. 170.311(a) and the location of the decontamination supplies required by Sec. 170.605(h).

(c) Prior to early entry, the agricultural employer must ensure that each worker either has read the applicable pesticide product labeling or has been informed, in a manner that the worker can understand, of all labeling requirements and statements related to human hazards or precautions, first aid, and user safety.

(d) The agricultural employer must ensure that each worker who enters a treated area during a restricted-entry interval is provided the personal protective equipment specified in the pesticide product labeling for early entry. The agricultural employer must ensure that the worker uses the personal protective equipment as intended according to manufacturer's instructions and follows any other applicable requirements on the pesticide product labeling. Personal protective equipment must conform to the standards in Sec. 170.507(b)(1) through (9).

(e) The agricultural employer must maintain the personal protective equipment in accordance with Sec. 170.507(c) and (d).

(f) The agricultural employer must ensure that no worker is allowed or directed to wear personal protective equipment without implementing measures sufficient to prevent heat-related illness and that each worker is instructed in the prevention, recognition, and first aid treatment of heat-related illness.

(g) The agricultural employer must instruct each worker on the proper use and removal of the personal protective equipment, and as appropriate, on its cleaning, maintenance and disposal. The agricultural employer must not allow or direct any worker to wear home or to take home employer-provided personal protective equipment contaminated with pesticides.

(h) During any early-entry activity, the agricultural employer must provide decontamination supplies in accordance with Sec. 170.509, except the decontamination supplies must be outside any area being treated with pesticides or subject to a restricted-entry interval, unless the decontamination supplies would otherwise not be reasonably accessible to workers performing early-entry tasks.

(i) If the pesticide product labeling of the product applied requires protective eyewear, the agricultural employer must provide at least one pint of water per worker in portable containers for eyeflushing that is immediately available to each worker who is performing early-entry activities.

(j) At the end of any early-entry activities the agricultural employer must provide, at the site where the workers remove personal protective equipment, soap, single-use towels and at least three gallons of water per worker so that the workers may wash thoroughly.

Stat. Auth.: ORS 654.025(2) and 656.726(4).
Stats. Implemented: ORS 654.001 – 654.295, 654.750 – 654.780.
Hist.: OR-OSHA Admin. Order 1-2017, f. 2/14/17, ef. 1/1/18.

170.607 Exceptions to personal protective equipment requirements specified on pesticide product labeling

(a) Body protection.

(1) A chemical-resistant suit may be substituted for coveralls. If a chemical-resistant suit is substituted for coveralls, any labeling requirement for an additional layer of clothing beneath the coveralls is waived.

(2) A chemical-resistant suit may be substituted for coveralls and a chemical-resistant apron.

(b) Boots. If chemical-resistant footwear with sufficient durability and a tread appropriate for wear in rough terrain is not obtainable, then leather boots may be worn in such terrain.

Note: Leather boots allowed to be worn for this exception are considered to be contaminated personal protective equipment. Thereafter, they must be stored separately from clean PPE, regular work clothing, and regular footwear and should not be worn for any other purpose.

(c) Gloves. If chemical-resistant gloves with sufficient durability and suppleness are not obtainable, then during activities with plants with sharp thorns, leather gloves may be worn over chemical-resistant glove liners. However, once leather gloves are worn for this use, thereafter they must be worn only with chemical-resistant liners and they must not be worn for any other use.

(d) Closed systems.

(1) When pesticides are being mixed or loaded using a closed system that meets all of the requirements in paragraph (d)(2) of this section, and the handler employer meets the requirements of paragraph (d)(3) of this section, the following exceptions to labeling-specified personal protective equipment are permitted:

(i) Handlers using a closed system to mix or load pesticides with a signal word of “DANGER” or “WARNING” may substitute a long-sleeved shirt, long pants, shoes and socks, chemical-resistant apron, protective eyewear, and any protective gloves specified on the labeling for handlers for the labeling-specified personal protective equipment.

(ii) Handlers using a closed system to mix or load pesticides other than those specified in paragraph (d)(1)(i) of this section may substitute protective eyewear, long-sleeved shirt, long pants, and shoes and socks for the labeling-specified personal protective equipment.

(2) The exceptions of paragraph (d)(1) of this section apply only in the following situations:

(i) Where the closed system removes the pesticide from its original container and transfers the pesticide product through connecting hoses, pipes and couplings that are sufficiently tight to prevent exposure of handlers to the pesticide product, except for the negligible escape associated with normal operation of the system.

(ii) When loading intact, sealed, water soluble packaging into a mixing tank or system. If the integrity of a water soluble packaging is compromised (for example, if the packaging is dissolved, broken, punctured, torn, or in any way allows its contents to escape), it is no longer a closed system and the labeling-specified personal protective equipment must be worn.

(3) The exceptions of paragraph (d)(1) of this section apply only where the handler employer has satisfied the requirements of Sec. 170.313 and all of the following conditions:

(i) Each closed system must have written operating instructions that are clearly legible and include: Operating procedures for use, including the safe removal of a probe; maintenance, cleaning and repair; known restrictions or limitations relating to the system, such as incompatible pesticides, sizes (or types) of containers or closures that cannot be handled by the system; any limits on the ability to measure a pesticide; and special procedures or limitations regarding partially-filled containers.

(ii) The written operating instructions for the closed system must be available at the mixing or loading site and must be made available to any handlers who use the system.

(iii) Any handler operating the closed system must be trained in its use and operate the closed system in accordance with its written operating instructions.

(iv) The closed system must be cleaned and maintained as specified in the written operating instructions and as needed to make sure the system functions properly.

(v) All personal protective equipment specified in the pesticide product labeling is immediately available to the handler for use in an emergency.

(vi) Protective eyewear must be worn when using closed systems operating under pressure.

(e) Enclosed cabs.

(1) If a handler applies a pesticide from inside a vehicle's enclosed cab, and if the conditions listed in paragraph (e)(2) of this section are met, exceptions to the personal protective equipment requirements specified on the product labeling for applicators are permitted as provided in paragraph (e)(3) of this section.

(2) All of the personal protective equipment required by the pesticide product labeling for applicators must be immediately available and stored in a sealed container to prevent contamination. Handlers must wear the applicator personal protective equipment required by the pesticide product labeling if they exit the cab within a treated area during application or when a restricted-entry interval is in effect. Once personal protective equipment is worn in a treated area, it must be removed before reentering the cab to prevent contamination of the cab.

(3) Handlers may substitute a long-sleeved shirt, long pants, shoes and socks for the labeling-specified personal protective equipment for skin and eye protection. If a filtering facepiece respirator (NIOSH approval number prefix TC-84A) or dust/mist filtering respirator is required by the pesticide product labeling for applicators, then that respirator need not be worn inside the enclosed cab if the enclosed cab has a properly functioning air ventilation system which is used and maintained in accordance with the manufacture's written operating instructions. If any other type of respirator is required by the pesticide labeling for applicators, then that respirator must be worn.

(f) Aerial applications.

(1) Use of gloves. The wearing of chemical-resistant gloves when entering or leaving an aircraft used to apply pesticides is optional, unless such gloves are required on the pesticide product labeling. If gloves are brought into the cockpit of an aircraft that has been used to apply pesticides, the gloves shall be kept in an enclosed container to prevent contamination of the inside of the cockpit.

(2) Open cockpit. Handlers applying pesticides from an open cockpit aircraft must use the personal protective equipment specified in the pesticide product labeling for use during application, except that chemical-resistant footwear need not be worn. A helmet may be substituted for chemical-resistant headgear. A helmet with a face shield lowered to cover the face may be substituted for protective eyewear.

(3) Enclosed cockpit. Persons occupying an enclosed cockpit may substitute a long-sleeved shirt, long pants, shoes, and socks for labeling-specified personal protective equipment.

(g) Crop advisors.

(1) Provided the conditions of paragraphs (g)(2) through (g)(4) of this section are met, crop advisors and their employees entering treated areas to perform crop advising tasks while a restricted-entry interval is in effect may substitute either of the following sets of personal protective equipment for the personal protective equipment specified on the pesticide labeling for handler activities:

(i) The personal protective equipment specified on the pesticide product labeling for early entry.

(ii) Coveralls, shoes plus socks and chemical-resistant gloves made of any waterproof material, and eye protection if the pesticide product labeling applied requires protective eyewear for handlers.

(2) The application has been complete for at least four hours.

(3) No such entry is allowed until any inhalation exposure level listed in the pesticide product labeling has been reached or any ventilation criteria required by Sec. 170.405(b)(3) or the pesticide product labeling have been met.

(4) The crop advisor or crop advisor employee who enters a treated area during a restricted-entry interval only performs crop advising tasks while in the treated area.

Stat. Auth.: ORS 654.025(2) and 656.726(4).
Stats. Implemented: ORS 654.001 – 654.295, 654.750 – 654.780.
Hist.: OR-OSHA Admin. Order 1-2017, f. 2/14/17, ef. 1/1/18.

Note: Oregon OSHA did not adopt Sec. 170.609 Equivalency requests.

Notes

Historical Notes for Subdivision W

Note: The Environmental Protection Agency (EPA), published in the September 1, 2004 Federal Register, amendments to 40 CFR 170, Worker Protection Standard. EPA amended the 1992 Pesticide Worker Protection Standard to permit optional use of separable glove liners beneath chemical-resistant gloves. This amendment also makes optional the provision that agricultural pilots wear gloves when entering or leaving aircraft. All other provisions of the Worker Protection Standard are unaffected by this rule. EPA believes that these changes will reduce the cost of compliance and will increase regulatory flexibility without increasing potential risks.

Oregon OSHA adopted these changes as published. These changes are in OR-OSHA's Division 4/W, Agriculture/Worker Protection Standard.

This is OR-OSHA Admin. Order 7-2004, filed 12/30/04, effective 12/30/04.

Note: In Oregon, Oregon OSHA administers and enforces the pesticide Worker Protection Standard (WPS: 40 CFR 170) as adopted in Division 4, Agriculture, Subdivision W, OAR 437-004-6000.

This rulemaking amends OAR 437-004-6000 to reflect non-substantive corrections and technical amendments that were published in the Federal Register from 2006 through 2009.

Oregon OSHA is also amending the pesticide Worker Protection Standard (WPS) in Division 7, Forest Activities, Subdivision A, General Requirements, OAR 437-007-0010, to clarify the references in Division 7 to the WPS in Division 4.

In addition, Oregon OSHA is amending Division 2, General Industry, Subdivision Z, Toxic and Hazardous Substances, by adopting a new rule (OAR 437-002-0170) to clarify that under certain circumstances all parts of the Worker Protection Standard (WPS) apply to general industry workplaces, and are a part of Division 2 in addition to, and not instead of, any other part of Division 2.

Members of the public submitting written comments expressed support for the changes but noted that the proposed amendments (being non-substantive) do not go far enough to improve the protection of Oregon's affected workers from exposure to pesticides. The changes suggested by these commenters were outside the parameters of this rulemaking.

This is Oregon OSHA Administrative Order 9-2009, adopted and effective September 21, 2009.

Note: Oregon Occupational Safety and Health Division (Oregon OSHA) administers and enforces the employee safety and health part of the U.S. Environmental Protection Agency (EPA)'s pesticide Worker Protection Standard (WPS) as adopted in Division 4/ Agriculture as adopted at OAR 437-004-6000. The standard aims to protect workers – those who work in pesticide-treated crop areas – and handlers – those who mix, load, and apply pesticides. EPA modified the WPS at the federal level (40 CFR 170) in the November 2, 2015 Federal Register. In response, Oregon OSHA initiated the rule-making process working with an advisory committee – including representatives of labor, employers, grower organizations, and government and nonprofit agencies, and other stakeholders – and reviewed extensive public comments received both orally at three public hearings held around the state, and in written format following formal proposal in late 2016.

Oregon OSHA is adopting most of the modified rules initiated by the EPA as well as several Oregon-initiated rules introduced to reflect the unique circumstances for employers in Oregon. The agency will continue to enforce the existing WPS through the end of 2017.

The rule changes are expected to lead to an overall reduction in incidents of unsafe pesticide exposure and to improve the occupational health of agricultural workers and pesticide handlers.

The adopted OARs:

- 437-004-6001 gives expiration and implementation dates for the existing and revised rules. The rules codified in Division 4/W as 170.1 through 170.260 will remain in effect through 2017, and expire on 12/31/2017. The new rules, codified as 170.301 through 170.607, and the other five new OARs will be implemented beginning on January 1, 2018.
- 437-004-6401 and 437-004-6501 provide specific effective dates for the revised subject matter to be included in training programs for both workers and handlers. In addition, the requirements for crop advisor training programs necessary to exempt workers and handlers from WPS training is cross-referenced to the minimum subject matter in these OARs.
- 437-004-6508 Respiratory Protection and 437-004-6509 Emergency eye-washes and eye flushing supplies maintain Oregon OSHA's more protective requirements related to respiratory protection and emergency eye-washes while fulfilling the EPA's pesticide label requirements.
- 437-004-6502 augments training requirements in Oregon for trainers of WPS handlers who use the Train-the-Trainer qualification described in 170.501(c)(4)(ii) of the WPS. The adopted rule does not apply to trainers of WPS handlers who meet the qualification as certified applicators described in 170.501(c)(4)(iii).

The agency will reconsider some details of the 2016 WPS proposal through a separate public rulemaking process centered on the Application Exclusion Zone (AEZ.) To give more time to fine-tune those provisions and to ease the transition to the modified rule requirements, Oregon OSHA is delaying implementation of the modified standard until Jan. 1, 2018. The expected result will be a revised proposal initiated in 2017, in time for it to take effect with the other modified sections of the WPS on Jan. 1, 2018.

This is Oregon OSHA Administrative Order 1-2017, adopted February 14, 2017 and effective January 1, 2018.

Note: Oregon OSHA administers and enforces the Environmental Protection Agency's (EPA) pesticide Worker Protection Standard (WPS) as adopted in Division 4/W (Agriculture/Worker Protection Standard), OAR 437-004-6000. Oregon OSHA has adopted two new Oregon Administrative Rules (OARs) that reflect specific requirements for employers in Oregon.

These rules complement and complete the changes adopted by Oregon OSHA on February 14th, 2017 on the amended Worker Protection Standard adopted by the EPA in the November 2, 2015 Federal Register. The rules, which exceed federal requirements, take effect January 1 ,2019.

The new OARs:

OAR 437-004-6405:

Restrictions associated with outdoor production pesticide applications(which replaces 170.405(a), is a new rule that describes the Application Exclusion Zone requirements (AEZ) including how employers ensure enclosed agricultural structures are closed properly, must provide instruction and information, and a decision matrix that navigates the rule requirements.

OAR 437-004-6406:

Pesticide spray drift and innovative methods is a new rule that describes that if issues relating to spray drift occur, then the employer is responsible for addressing those issues, and how drift reduction technologies can be used to gain approval for innovative methods through the variance process.

The WPS rules are also referenced, in Division 2, General Industry, at OAR 437-002-0170; and in Division 7, Forest Activities, at OAR 437-007-0010.

Pesticides, although a clear necessity in many workplaces, also represent varying levels of risks to workers and others (depending on both the particular pesticide used and the circumstances of the application). The Worker Protection Standard, taken as a whole, provides a number of important protective measures to reduce those risks. However, the risk of unintended exposures due to what is typically referred to as unintended "drift" can create exposure to workers outside the intended application area. In the case of worker housing, that exposure can also involve the workers' family members. The provisions of this proposed rule – as was true of the original EPA rule addressing AEZs – are intended to address that potential by providing an added measure of protection against unintended and unanticipated exposures outside of the locations where pesticides are intended to be applied. The AEZ surrounds and moves with spray equipment, beyond the safeguards enforced with respect to the treated area, must be free of all people other than appropriately trained and equipped pesticide handlers. The rule changes are expected to lead to an overall reduction in incidents of unsafe pesticide exposure and to improve the occupational health of agricultural workers and pesticide handlers.

Oregon OSHA held five hearings in multiple locations on these proposed rules. The division received 938 written comments during the extended comment period and over 100 oral comments at these hearings. These comments were vast and diverse, and all were considered by Oregon OSHA before the division adopted the rules as filed. Oregon OSHA published a summary of comments and agency decisions document on its website for viewing.

This is Oregon OSHA Administrative Order 2-2018, adopted June 29, 2018 and effective January 1, 2019.

List of Figures for Subdivision W

Figure 1 - Worker Protection Standard, Application Exclusion Zone Decision Matrix 33

List of Tables for Subdivision W

Table 1 – Entry Restrictions During Enclosed Space Production Pesticide Applications 36
Table 2 - General guideline for minimum eye protection 54

TABLE OF CONTENTS

437-004-9000 Oregon Rules for Air Contaminants Z-1
(1) Oregon Table Z-1 ..... Z-1
(2) Oregon Table Z-2 ..... Z-1
(3) Oregon Table Z-3 ..... Z-2
(4) Computation formulae Z-2
(5) Engineering or administrative controls Z-4

437-004-9010 Fumigated Areas Z-29

437-004-9050 Asbestos Z-31

437-004-9090 13 Carcinogens Z-32

437-004-9600 Lead Z-32

437-004-9620 Cadmium Z-35

437-004-9626 Chromium (VI) Z-35

437-004-9640 Benzene Z-36

437-004-9650 Bloodborne Pathogens Z-37

437-004-9710 Acrylonitrile Z-38

437-004-9720 Thiram Z-38
(1) Scope and application Z-38
(2) Definitions Z-39
(3) General requirements Z-39

437-004-9740 Ethylene Oxide Z-43

437-004-9760 Formaldehyde Z-44

437-004-9780 Methylenedianiline Z-44

437-004-9800 Hazard Communication Standard for Agricultural Employers Z-44
(1) Purpose Z-45
(2) Scope and application Z-45
(3) Reserved Z-47
(4) Written hazard communication program Z-47
(5) Labels and other forms of warning Z-48
(6) Safety data sheets Z-49
(7) Employee information and training Z-50
(8) Trade secrets Z-51
(9) Subpoenas, citations, penalties Z-51
(10) Phase-in dates for new rule requirements Z-51
(11) Definitions Z-52

437-004-9830 Retention of Department of Transportation (DOT) Markings, Placards and Labels Z-59

437-004-9850 Pipe Labeling Z-59
(1) Scope and application Z-59
(2) Definitions Z-59
(3) Labeling Z-60
(4) Location of labeling Z-61
(5) Visibility Z-61
Appendix A Z-63

437-004-9860 Hazardous Chemicals in Laboratories Z-65

437-004-9000 Oregon Rules for Air Contaminants.

An employee's exposure to any substance in Oregon Tables Z-1, Z-2, or Z-3 of this section must be limited in accordance with the requirements of the following paragraphs of this section.

(1) Oregon Table Z-1.

(a) Substances with limits preceded by "C" – ceiling values. An employee's exposure to any substance in Oregon Table Z-1, the exposure limit of which is not preceded by a "C", must at no time exceed the ceiling exposure limit given for that substance. If instantaneous monitoring is not feasible, then assess the ceiling as a 15-minute time-weighted average. This exposure level must never be exceeded at any time during the workday.

(b) Other substances – 8-hour time-weighted averages (PEL-TWA). An employee's exposure to any substance in Oregon Table Z-1, the exposure limit of which is not preceded by a "C", must not exceed the 8-hour Time-Weighted Average for that substance in any 8-hour shift of a 40-hour work week.

(c) Other substances – Excursion Limits. Excursions in exposure levels may be more than three times the PEL-TWA number for no more than a total of 30 minutes during a workday, and must never be more than five times the PEL-TWA, provided that the overall 8-hour PEL-TWA is not exceeded.

(d) Skin designation. To prevent or reduce skin absorption, you must prevent or reduce an employee's skin exposure to substances listed in Oregon Table Z-1 with an "X" in the Skin designation column following the substance name. Prevent or reduce exposure to the extent necessary in the cirumstances through the use of gloves, coveralls, goggles, or other appropriate personal protective equipment, engineering controls or work practices.

(e) Oregon Table Z-1 in Division 4/Z, OAR 437-004-9000, has a complete list of regulated substances. If your operation exposes an employee to a substance listed in Oregon Table Z-1, and that substance includes a reference to another rule, that rule may apply to your circumstances.

(2) Oregon Table Z-2. An employee's exposure to any substance listed in Oregon Table Z-2 must not exceed the following exposure limits:

(a) 8-hour time-weighted averages. An employee's exposure to any substance in Oregon Table Z-2, in any 8-hour work shift of a 40-hour work week, must not exceed the 8-hour time-weighted average limit for that substance in Oregon Table Z-2.

(b) Acceptable ceiling concentrations. An employee's exposure to a substance in Oregon Table Z-2 must not exceed the acceptable ceiling concentration for that substance during an 8-hour shift except:

(i) Acceptable maximum peak above the acceptable ceiling concentration for an 8-hour shift. An employee's exposure to a substance in Oregon Table Z-2 must never exceed the acceptable maximum peak above the acceptable ceiling concentration and must not exceed the maximum duration of exposure at that level for the substance during an 8-hour shift.

(c) Example. During an 8-hour work shift, an employee's exposure to benzene is limited to an 8-hour time-weighted average (TWA) of 10 ppm. The acceptable ceiling concentration of benzene during the 8-hour work shift is a maximum of 25 ppm, unless that exposure is no more than 50 ppm and for not longer than 10 minutes during an 8-hour work shift. Such exposures must be compensated by lower exposure levels (concentrations below the TWA number - 10 ppm) during that shift so that the overall 8-hour time-weighted average is a maximum of 10 ppm.

Example from Oregon Table Z-2					
			Acceptable Max. Peak Above the Acceptable Ceiling Concentration for an 8-hour Shift		
Substance	8-Hour Time-Weighted Average	Acceptable Ceiling Concentration	Concentration	Maximum Duration	Skin
Benzene (a) (Z87.4-1969)	10 ppm	25 ppm	50 ppm	10 min.	
Beryllium and beryllium Compounds (Z37.17-1970)	2 µg/m3	5 µg/m3	25 µg/m3	30 min.	
Carbon tetrachloride (Z37.19-1967)	10 ppm	25 ppm	200 ppm	5 min. In any 4 hours	

(d) Skin designation. To prevent or reduce skin absorption, you must prevent or reduce an employee's skin exposure to substances listed in Oregon Table Z-2 with an "X" in the Skin designation column following the substance name. Prevent or reduce exposure to the extent necessary in the circumstances through the use of gloves, coveralls, goggles, or other appropriate personal protective equipment, engineering controls, or work practices.

(3) Oregon Table Z-3. An employee's exposure to any substance in Oregon Table Z-3, in any 8-hour work shift of a 40-hour work week, must not exceed the 8-hour time-weighted average limit given for that substance.

(4) Computation formulae. The computation formulae that apply to exposures to one or more substances, with 8-hour time-weighted averages included in OAR 437, Division 4/Z, Chemicals/Toxins, in order to determine whether an employee is exposed over the regulatory limit are as follow:

(a) For a single air contaminant:

(i) Compute the cumulative exposure for an 8-hour work shift as follows:

$$E = (C_aT_a + C_bT_b + ...C_nT_n) \div 8$$

Where:

E is the equivalent exposure to that substance for the shift.

C is the concentration during any period T where the concentration remains constant.

T is the duration in hours of the exposure at the concentration C.

The value of E must not exceed the 8-hour time-weighted average specified for that substance in Subdivision 4/Z.

(ii) To illustrate the formula in **(4)(a)(i)** above, assume that Substance A (from Oregon Table Z-1) has an 8-hour time-weighted average limit of 100 ppm. Assume that an employee is subject to the following exposure:

Two hours exposure at 150 ppm

Two hours exposure at 75 ppm

Four hours exposure at 50 ppm

Substituting this information in the formula, we have:

$$[(C_a \times T_a) + (C_b \times T_b) + \ldots (C_n \times T_n)] \div 8 = E = TWA$$

$$[(2 \times 150) + (2 \times 75) + (4 \times 50)] \div 8 = 81.25 \text{ ppm}$$

Since 81.25 ppm is less than 100 ppm, the 8-hour time-weighted average limit, the exposure is acceptable.

(b) For a mixture of air contaminants:

(i) In case of a mixture of air contaminants, compute the equivalent exposure as follows:

$$E_m = (C_1 \div L_1) + (C_2 \div L_2) + \ldots (C_n \div L_n)$$

Where:

E_m is the equivalent exposure for the mixture.

C_n is the concentration of a particular contaminant.

L_n is the exposure limit for that substance in Subdivision 4/Z.

The value of E_m must not exceed “unity” (1).

(ii) To illustrate the formula in **(4)(b)(i)** above, consider the following exposures:

Substance	Actual concentration of 8-hour exposure (C_n)	8-hour time-weighted average exposure limit (L_n)
1	500 ppm	1,000 ppm
2	45 ppm	200 ppm
3	40 ppm	200 ppm

Substituting in the formula, we have:

$E_m = (C_1 \div L_1) + (C_2 \div L_2) + \ldots (C_n \div L_n)$
$E_m = (500 \div 1000) + (45 \div 200) + (40 \div 200)$
$E_m = 0.500 + 0.225 + 0.200$
$E_m = 0.925$

Since E_m (0.925) is less than unity (1), the exposure combination is within acceptable limits.

(5) Engineering or administrative controls. To achieve compliance with the exposure limits in paragraphs (1) through (4) of this section, first determine and implement, when feasible, engineering or administrative controls. When such controls are not feasible, mandate the use of protective equipment or any other protective measures to keep exposure within the limits in this section. Any equipment or technical measures used for this purpose must be approved for each particular use by a competent Industrial Hygienist or other technically qualified person. Whenever using respirators, comply with Division 4/I, OAR 437-004-1040, Respiratory Protection.

NOTE: **Bold print** identifies substances for which the Permissible Exposure Limits (PELs) are different than the federal Limits.

TABLE Z-1 – ADOPTED VALUES (IN ALPHABETICAL ORDER)				
Substance	**CAS No. [c]**	**ppm [a]**	**mg/m^3 [b]**	**Skin**
Abate	**3383-96-8**		**10**	
Acetaldehyde	**75-07-0**	**100**	**180**	
Acetic Acid	64-19-7	10	25	
Acetic anhydride	108-24-7	5	20	
Acetone	67-64-1	1,000	2,400	
Acetonitrile	75-05-8	40	70	
2-Acetylaminoflourine	53-96-3		(See 437-004-9090)	
Acetylene	**74-86-2**	**1,000**		
Acetylene dichloride, see 1,2-Dichloroethylene				
Acetylene tetrabromide	79-27-6	1	14	
Acrolein	107-02-8	0.1	0.25	
Acrylamide	79-06-1	—	0.3	X
Acrylonitrile	107-13-1		(See 437-004-9710)	
Aldrin	309-00-2	—	0.25	X
Allyl alcohol	107-18-6	2	5	X
Allyl chloride	107-05-1	1	3	
Allyn glycidyl ether (AGE)	**106-92-3**	**5** (C) 10	**22** (C) 45	
Allyl propyl disulfide	2179-59-1	2	12	
alpha Alumina	**1344-28-1**			
Total Dust		**—**	**10**	
Respirable Fraction		**—**	**5**	
Aluminum Metal Dust	**7429-90-5**			
Total Dust		**—**	**10**	
Respirable Fraction		**—**	**5**	
Alundum (A1203)		**—**	**10**	
4-Aminodiphenyl	92-67-1		(See 437-004-9090)	
2-Aminoethanol, see Ethanolamine				
2-Aminopyridine	504-29-0	0.5	2	
Ammonia	**7664-41-7**	**25**	**18**	
Ammonium Chloride Fumes	**12125-02-9**	**—**	**10**	
Ammonium sulfamate	**7773-06-0**			
Total Dust		**—**	**10**	
Respirable Fraction		**—**	**5**	
n-Amyl acetate	628-63-7	100	525	
sec-Amyl acetate	626-38-0	125	650	
Aniline and homologs	62-53-3	5	19	X

TABLE Z-1 – ADOPTED VALUES (IN ALPHABETICAL ORDER)				
Substance	**CAS No. [c]**	**ppm [a]**	**mg/m^3 [b]**	**Skin**
Anisidine (o, p-isomers)	29191-52-4		0.5	X
Antimony & Compounds (as Sb)	7440-36-0	—	0.5	
ANTU (alpha Naphthylthiourea)	86-88-4	—	0.3	
Arsenic, Inorganic Compounds (as As) (See 1910.1018)	7440-38-2		0.01	
Arsenic, Organic Compounds (as As)	7440-38-2	—	0.5	
Arsine	7784-42-1	0.05	0.2	
Asbestos		(See 437-004-9050)		
Asphalt (petroleum) Fumes	**8052-42-4**	**—**	**5**	
Azinphos-methyl	86-50-1	—	0.2	X
Barium (soluble compounds)	7440-39-3	—	0.5	
Barium Sulfate **Total Dust** **Respirable Fraction**	**7727-43-7**	 **—** **—**	 **10** **5**	
Benomyl **Total Dust** **Respirable Fraction**	**17804-35-2**	 **—** **—**	 **10** **5**	
Benzene See Table Z-2 for the limits applicable in the operations or sectors excluded in OAR 437-004-9640 [d]	71-43-2		(See 437-004-9640)	
Benzidine	92-87-5		(See 437-004-9090)	
p-Benzoquinone, see Quinone				
Benzoyl peroxide	94-36-0	—	5	
Benzyl chloride	100-44-7	1	5	
Beryllium and Beryllium compounds	7440-41-7		(See Table Z-2)	
Biphenyl, see Diphenyl				
Bismuth telluride (undoped) **Total Dust** **Respirable Fraction**	**1304-82-1**	 **—** **—**	 **10** **5**	
Bismuth telluride (Se-doped)		**—**	**5**	
Bisphenol A, see Diglycidyl ether				
Boron oxide	**1303-86-2**	**—**	**10**	
Boron tribromide	**10294-33-4**	**1**	**10**	
Boron trifluoride	7637-07-2	(C) 1	(C) 3	
Bromine	7726-95-6	0.1	0.7	
Bromine pentafluoride	**7789-30-2**	**0.1**	**0.7**	
Bromoform	75-25-2	0.5	5	X
Butadiene (1,3-Butadiene) (See 1910.1051; and 1910.19(l))	106-99-0	1 ppm/5 ppm STEL		
Butane	**106-97-8**	**800**	**1,900**	
Butanethiol, see Butyl mercaptan				

TABLE Z-1 – ADOPTED VALUES (IN ALPHABETICAL ORDER)				
Substance	**CAS No. [c]**	**ppm [a]**	**mg/m^3 [b]**	**Skin**
2-Butanone (Methyl Ethyl Ketone)	78-96-3	200	590	
2-Butoxyethanol (Butyl cellosolve)	111-76-2	50	240	X
Butyl acetate (n-Butyl acetate)	123-86-4	150	710	
sec-Butyl acetate	105-46-4	200	950	
tert-Butyl acetate	540-88-5	200	950	
n-Butyl alcohol	71-36-3	100	300	
sec-Butyl alcohol	78-92-2	150	450	
tert-Butyl alcohol	75-65-0	100	300	
Butyl lactate	**138-22-7**	**1**	**5**	
Butylamine	109-73-9	(C) 5	(C) 15	X
tert-Butyl chromate (as CrO_3)	1189-85-1		(See 437-004-9626)	
n-Butyl glycidyl ether (BGE)	2426-08-6	50	270	
Butyl mercaptan	**109-79-5**	**0.5**	**1.5**	
p-tert-Butyltoluene	98-51-1	10	60	
Cadmium dust and fume (as Cd)	7440-43-9	(See 437-004-9620)	0.005	
Calcium carbonate	**1317-65-3**			
Total Dust		**—**	**10**	
Respirable Fraction		**—**	**5**	
Calcium hydroxide	**1305-62-0**			
Total Dust		**—**	**10**	
Respirable Fraction		**—**	**5**	
Calcium oxide	1305-78-8	—	5	
Calcium silicate	**1344-95-2**			
Total Dust		**—**	**10**	
Respirable Fraction		**—**	**5**	
Calcium sulfate	**7778-18-9**			
Total Dust		**—**	**10**	
Respirable Fraction		**—**	**5**	
Camphor, synthetic	76-22-2	—	2	
Caprolactam (2-Oxonexa-methylenimine)	**105-60-2**	**—**	**5**	
Carbaryl (Sevin®)	63-25-2	—	5	
Carbon black	1333-86-4	—	3.5	
Carbon dioxide	124-38-9	5,000	9,000	
Carbon disulfide	75-15-0		(See Table Z-2)	
Carbon monoxide	630-08-0	50	55	
Carbon tetrachloride	56-23-5		(See Table Z-2)	
Cellulose	**9006-34-6**			
Total Dust		**—**	**10**	
Respirable Fraction		**—**	**5**	
Chlordane	57-74-9	—	0.5	X
Chlorinated camphene	8001-35-2	—	0.5	X

TABLE Z-1 – ADOPTED VALUES (IN ALPHABETICAL ORDER)				
Substance	**CAS No. [c]**	**ppm [a]**	**mg/m^3 [b]**	**Skin**
Chlorinated diphenyl oxide	55720-99-5	—	0.5	
Chlorine	7782-50-5	(C) 1	(C) 3	
Chlorine dioxide	10049-04-4	0.1	0.3	
Chlorine trifluoride	7790-91-2	(C) 0.1	(C) 0.4	
Chloroacetaldehyde	107-20-0	(C) 1	(C) 3	
a-Chloroacetophenone (Phenacyl chloride)	532-27-4	0.05	0.3	
Chlorobenzene	108-90-7	75	350	
o-Chlorobenzylidene malononitrile	2698-41-1	0.05	0.4	
Chlorobromomethane	74-97-5	200	1,050	
2-Chloro-1, 3-butadiene, see beta-Chloroprene				
Chlorodiphenyl (42% Chlorine)	53469-21-9	—	1	X
Chlorodiphenyl (54% Chlorine)	11097-69-1	—	0.5	X
1-Chloro, 2, 3-epoxypropane, see Epichlorhydrin				
2-Chloroethanol, see Ethylene chlorohydrin				
Chloroethylene, see Vinyl Chloride				
Chloroform (Trichloromethane)	**67-66-3**	**(C) 25**	**(C) 120**	
bis-Chloromethyl ether	542-88-1		(See 437-004-9090)	
Chloromethyl methyl ether	107-30-2		(See 437-004-9090)	
1-Chloro-1-nitropropane	600-25-9	20	100	
Chloropicrin	76-06-2	0.1	0.7	
beta-Chloroprene (2-chloro-1,3-butadiene)	126-99-8	25	90	X
2-Chloro-6-(trichloromethyl) pyridine **Total Dust** **Respirable Fraction**	**1929-82-4**	 **—** **—**	 **10** **5**	
Chromic acid and chromates (as CrO_3)	1333-82-0		(See Table Z-2)	
Chromium (II) compounds (as Cr)	7440-47-3	—	0.5	
Chromium (III) compounds (as Cr)	7440-47-3	—	0.5	
Chromium (VI) compounds			(See 437-004-9626)	
Chromium metal & insol. salts (as Cr)	7440-47-3	—	1	
Clopidol **Total Dust** **Respirable Fraction**	**2971-90-6**	 **—** **—**	 **10** **5**	
Coal Dust			(See Table Z-3)	

TABLE Z-1 – ADOPTED VALUES (IN ALPHABETICAL ORDER)				
Substance	**CAS No. [c]**	**ppm [a]**	**mg/m^3 [b]**	**Skin**
Coal tar pitch volatiles (See 1910.1002) (Benzene soluble fraction) anthracene, BaP, phenanthrene, acridine, chrysene, pyrene	65966-93-2	—	0.2	
Cobalt metal, fume & dust	7440-48-4	—	0.1	
Coke oven emissions (See 1910.1029)				
Copper fume Dusts and Mists	7440-50-8 7440-50-8	— —	0.1 1	
Corundum (A1203)	**1302-74-5**	**—**	**10**	
Cotton dust (See 1910.1043)				
Cotton dust (raw)		—	1 [e]	
Crag® herbicide (Sesone) **Total Dust** **Respirable Fraction**	**136-78-7**	 **—** **—**	 **10** **5**	
Cresol (all isomers)	1319-77-3	5	22	X
Crotonaldehyde	123-73-9/ 4170-30-3	 2	 6	
Cumene	98-82-8	50	245	X
Cyanides (as CN)		—	5	X
Cyanogen	**460-19-5**	**10**	**—**	
Cyclohexane	110-82-7	300	1,050	
Cyclohexanol	108-93-0	50	200	
Cyclohexanone	108-94-1	50	200	
Cyclohexene	110-83-8	300	1,015	
Cyclopentadiene	542-92-7	75	200	
2,4-D (Dichlorophenoxyacetic acid)	94-75-7	—	10	
DDT	50-29-3	—	1	X
DDVP, see Dichlorvos				
Decaborane	17702-41-9	0.05	0.3	X
Demeton® (Systox)	8065-48-3	—	0.1	X
Diacetone alcohol (4-hydroxy-4-methyl-2-pentanone)	123-42-2	50	240	
1, 2-Diaminoethane, see Ethylenediamine				
Diazinon	**333-41-5**	**—**	**0.1**	**X**
Diazomethane	334-88-3	0.2	0.4	
Diborane	19287-45-7	0.1	0.1	
Dibrom®	**300-76-5**	**—**	**3**	
1,2-Dibromo-3-chloropropane (DBCP) (See 1910.1044)	96-12-8	0.001		

TABLE Z-1 – ADOPTED VALUES (IN ALPHABETICAL ORDER)				
Substance	**CAS No. [c]**	**ppm [a]**	**mg/m^3 [b]**	**Skin**
1,2-Dibromoethane, see Ethylene dibromide				
2-N-Dibutylaminoethanol	**102-81-8**	**2**	**14**	**X**
Dibutyl phosphate	107-66-4	1	5	
Dibutyl phthalate	84-74-2	—	5	
Dichloroacetylene	**7572-29-4**	**(C) 0.1**	**(C) 0.4**	
o-Dichlorobenzene	95-50-1	(C) 50	(C) 300	
p-Dichlorobenzene	106-46-7	75	450	
3,3-Dichlorobenzidine	91-94-1		(See 437-004-9090)	X
Dichlorodifluoromethane	75-71-8	1,000	4,950	
1,3-Dichloro-5, 5-dimethyl hydantoin	118-52-5	—	0.2	
Dichlorodiphenyltrichloroethane (DDT)	50-29-3	—	1	X
1, 1-Dichloroethane	75-34-3	100	400	
1, 2-Dichloroethane, see Ethylene dichloride				
1, 2-Dichlorethylene	540-59-0	200	790	
Dichloroethyl Ether	**111-44-4**	**5** (C) 15	**30** (C) 90	**X**
Dichloromethane, see Methylene chloride				
Dichloromonofluoromethane	75-43-4	1,000	4,200	
1, 1-Dichloro-1-nitroethane	594-72-9	(C) 10	(C) 60	
1, 2-Dichloropropane, see Propylene dichloride				
Dichlorotetrafluoroethane	76-14-2	1,000	7,000	
Dichlorvos (DDVP)	62-73-7	**0.1**	1	X
Dicyclohexylmethane 4,4'-diisocyanate (hydrogenated MDI)	**5124-30-1**		**SeeTable Z-2**	
Dicyclopentadienyl iron **Total Dust** **Respirable Fraction**	**102-54-5**	 **—** **—**	 **10** **5**	
Dieldrin	60-57-1	—	0.25	X
Diethylamine	109-89-7	25	75	
2-Diethylaminoethanol	100-37-8	10	50	X
Diethylene triamine	**111-40-0**	**(C) 1**	**(C) 4**	**X**
Diethylether, see Ethyl ether				
Difluorodibromomethane	75-61-6	100	860	
Diglycidyl ether (DGE)	2238-07-5	(C) 0.5	(C) 2.8	
Dihydroxybenzene, see Hydroquinone				
Diisobutyl ketone	**108-83-8**	**25**	**150**	

TABLE Z-1 – ADOPTED VALUES (IN ALPHABETICAL ORDER)				
Substance	**CAS No. [c]**	**ppm [a]**	**mg/m^3 [b]**	**Skin**
Diisopropylamine	108-18-9	5	20	X
Dimethoxymethane, see Methylal				
Dimethyl acetamide	127-19-5	10	35	X
Dimethylamine	124-40-3	10	18	
4-Dimethylaminoazobenzene	60-11-7		(See 437-004-9090)	
Dimethylaminobenzene, see Xylidene				
Dimethylaniline (N,N-Dimethy-laniline)	121-69-7	5	25	X
Dimethylbenzene, see Xylene				
Dimethyl-1,2-dibromo-2, 2-dichloroethyl phosphate	300-76-5	—	3	
Dimethylformamide	68-12-2	10	30	X
2,6-Dimethylheptanone, see Diisobutyl ketone				
1,1-Dimethylhydrazine	57-14-7	0.5	1	X
Dimethylphthalate	131-11-3	—	5	
Dimethyl sulfate	77-78-1	1	5	X
Dinitrobenzene (all isomers) (ortho) (meta) (para)	 528-29-0 99-65-0 100-25-4		1	X
Dinitro-o-cresol	534-52-1	—	0.2	X
Dinitrotoluene	25321-14-6	—	1.5	X
Dioxane (Diethylene dioxide)	123-91-1	100	360	X
Diphenyl (Biphenyl)	92-52-4	0.2	1	
Diphenylamine	**122-39-4**	**—**	**10**	
Diphenylmethane diisocyanate (MDI),			(See Table Z-2)	
Dipropylene glycol methyl ether	34590-94-8	100	600	X
Diquat	**231-36-7**	**—**	**0.5**	
Di-sec, octyl phthalate (Di-2-ethyl-hexylphthalate	117-81-7	—	5	
Emery **Total Dust** **Respirable Fraction**	**12415-34-8**	 **—** **—**	 **10** **5**	
Endosulfan (Thiodan®)	**115-29-7**	**—**	**0.1**	**X**
Endrin	72-20-8	—	0.1	X
Epichlorohydrin	106-89-8	5	19	X
EPN	2104-64-5	—	0.5	X
1,2-Epoxypropane, see Propylene oxide				
2,3-Epoxy-1-propanol, see Glycidol				
Ethane	**74-84-0**	**1,000**	**—**	

TABLE Z-1 – ADOPTED VALUES (IN ALPHABETICAL ORDER)				
Substance	**CAS No. [c]**	**ppm [a]**	**mg/m^3 [b]**	**Skin**
Ethanethiol, see Ethyl mercaptan				
Ethanolamine	141-43-5	3	6	
2-Ethoxyethanol (Cellosolve)	**110-80-5**	**100**	**370**	**X**
2-Ethoxyethylacetate (Cellosolve acetate)	111-15-9	100	540	X
Ethyl acetate	141-78-6	400	1,400	
Ethyl acrylate	140-88-5	25	100	X
Ethyl alcohol (ethanol)	64-17-5	1,000	1,900	
Ethylamine	75-04-7	10	18	
Ethyl amyl ketone (5-methyl-3-heptanone)	541-85-5	25	130	
Ethyl benzene	100-41-4	100	435	
Ethyl bromide	74-96-4	200	890	
Ethyl butyl ketone (3-Heptanone)	106-35-4	50	230	
Ethyl chloride	75-00-3	1,000	2,600	
Ethyl ether	60-29-7	400	1,200	
Ethyl formate	109-94-4	100	300	
Ethyl mercaptan	**75-08-1**	**0.5** (C) 10	**1** (C) 25	
Ethyl silicate	78-10-4	100	850	
Ethylene	**74-85-1**	**1,000**	**—**	
Ethylene chlorohydrin	107-07-3	5	16	X
Ethylenediamine	107-15-3	10	25	
Ethylene dibromide	106-93-4		(See Table Z-2)	
Ethylene dichloride	107-06-2		(See Table Z-2)	
Ethylene gylcol particulate		**—**	**10**	
Ethylene glycol, Vapor	**107-21-1**	**100**	**260**	
Ethylene glycol dinitrate	628-96-6	(C) 0.2	(C) 1	X
Ethylene gylcol methyl acetate (Methyl cellosolve acetate) (2-Methoxy-ethel acetate)	110-49-6	25	120	X
Ethylenimine	151-56-4		(See 437-004-9090)	
Ethylene oxide	75-21-8	1	(See 437-004-9740)	
Ethylidine chloride, see 1, 1-Dichloroethane				
N-Ethylmorpholine	100-74-3	20	94	X
Ferbam **Total Dust** **Respirable Fraction**	**14484-64-1**	 **—** **—**	 **10** **5**	
Ferrovanadium dust	12604-58-9	—	1	
Fibrous glass, see Glass, Fibrous				

TABLE Z-1 – ADOPTED VALUES (IN ALPHABETICAL ORDER)				
Substance	**CAS No. [c]**	**ppm [a]**	**mg/m^3 [b]**	**Skin**
Fluorides (As F)		—	(See Table Z-2)	
Fluorine	7782-41-4	0.1	0.2	
Fluorotrichloromethane (Trichlorofluoromethane)	75-69-4	1,000	5,600	
Formaldehyde	50-00-0		(See 437-004-9760)	
Formic acid	64-18-6	5	9	
Furfural	98-01-1	5	20	X
Furfuryl alcohol	**98-00-0**	**5**	**20**	
Gasoline	**8006-61-9**		**[g]**	
Germanium tetrahydride	**7782-65-2**	**0.2**	**0.6**	
Glass, Fibrous or dust			**10**	
Glycerin (mist) **Total Dust** **Respirable Fraction**	**56-81-5**		 **10** **5**	
Glycidol	556-52-5	50	150	
Glycol momoethyl ether, see 2-Ethoxythanol				
Grain dust (oat, wheat, barley)			10	
Graphite natural, respirable	7782-42-5		(See Table Z-3)	
Graphite (Synthetic) **Total Dust** **Respirable Fraction**	**7782-42-5**		 **10** **5**	
Guthion®, see Azinphosmethyl				
Gypsum **Total Dust** **Respirable Fraction**	**13397-24-5**	 **—** **—**	 **10** **5**	
Hafnium	7440-58-6	—	0.5	
Heptachlor	76-44-8	—	0.5	X
Heptane (n-heptane)	142-82-5	500	2,000	
Hexachlorocyclopentadiene	**77-47-4**	**0.1**	**1**	
Hexachloroethane	67-72-1	1	10	X
Hexachloronaphthalene	1335-87-1	—	0.2	X
Hexafluoroacetone	**684-16-2**	**0.1**	**0.7**	**X**
Hexamethylene diisocyanate (HDI)	**822-06-0**		(See Table Z-2)	
1,6 Hexamethylene diisocyanate Based Adduct			(See Table Z-2)	
Hexane (n-hexane)	110-54-3	500	1,800	
2-Hexanone	591-78-6	100	410	
Hexone (Methyl isobutyl ketone)	108-10-1	100	410	
sec-Hexyl acetate	108-84-9	50	300	
Hydrazine	302-01-2	1	1.3	X

TABLE Z-1 – ADOPTED VALUES (IN ALPHABETICAL ORDER)				
Substance	**CAS No. [c]**	**ppm [a]**	**mg/m^3 [b]**	**Skin**
Hydrogen	**1333-74-0**	**1,000**	**—**	
Hydrogen bromide	10035-10-6	3	10	
Hydrogen chloride	7647-01-0	(C) 5	(C) 7	
Hydrogen cyanide	74-90-8	10	11	X
Hydrogen fluoride (as F)	7664-39-3		(See Table Z-2)	
Hydrogen peroxide	7722-84-1	1	1.4	
Hydrogen selenide (as Se)	7783-07-5	0.05	0.2	
Hydrogen sulfide	7783-06-4		(See Table Z-2)	
Hydroquinone	123-31-9	—	2	
Indene	**95-13-6**	**10**	**45**	
Indium and compounds (as In)	**7440-74-6**	**—**	**0.1**	
Iodine	7553-56-2	(C) 0.1	(C) 1	
Iron oxide fume	1309-37-1	—	10	
Iron pentacarbonyl	**13463-40-6**	**0.1**	**0.23**	
Iron salts, soluble, as Fe		**—**	**1**	
Isoamyl acetate	123-92-2	100	525	
Isoamyl alcohol (primary and secondary)	123-51-3	100	360	
Isobutyl acetate	110-19-0	150	700	
Isobutyl alcohol	78-83-1	100	300	
Isophorone	**78-59-1**	**10**	**55**	
Isophorone diisocyanate (IPDI)	**4098-71-9**		(See Table Z-2)	
Isopropyl acetate	108-21-4	250	950	
Isopropyl alcohol	67-63-0	400	980	
Isopropylamine	75-31-0	5	12	
Isopropyl ether	**108-20-3**	**250**	**1,050**	
Isopropyl glycidyl ether (IGE)	4016-14-2	50	240	
Kaolin	**1332-58-7**			
Total Dust		**—**	**10**	
Respirable Fraction		**—**	**5**	
Ketene	463-51-4	0.5	0.9	
Lead, inorganic (as Pb)	7439-92-1	(See 437-004-9600)	0.05	
Lead arsenate (See 1910.1018)	**7784-40-9**		**0.01**	
Limestone	**1317-65-3**			
Total Dust		**—**	**10**	
Respirable Fraction		**—**	**5**	
Lindane	58-89-9	—	0.5	X
Lithium hydride	7580-67-8	—	0.025	
L.P.G. (Liquified petroleum gas)	68476-85-7	1,000	1,800	

TABLE Z-1 – ADOPTED VALUES (IN ALPHABETICAL ORDER)				
Substance	**CAS No. [c]**	**ppm [a]**	**mg/m^3 [b]**	**Skin**
Magnesite **Total Dust** **Respirable Fraction**	**546-93-0**	 **—** **—**	 **10** **5**	
Magnesium oxide fume **Total Dust** **Respirable Fraction**	**1309-48-4**	 **—** **—**	 **10** **5**	
Malathion	**121-75-5**	**—**	**10**	**X**
Maleic anhydride	108-31-6	0.25	1	
Manganese Compounds (as Mn)	7439-96-5	—	(C) 5	
Manganese fume (as Mn)	7439-96-5	—	(C) 5	
Marble **Total Dust** **Respirable Fraction**	**1317-65-3**	 **—** **—**	 **10** **5**	
Mercury (aryl, inorganic, organo, and vapor) (as Hg)	7439-97-6 (metal)		(See Table Z-2)	
Mesityl oxide	141-79-7	25	100	
Methane	**74-82-8**	**1,000**	**—**	
Methanethiol, see Methyl mercaptan				
Methoxychlor **Total Dust** **Respirable Fraction**	**72-43-5**	 **—** **—**	 **10** **5**	
2-Methoxyethanol (Methyl Cellosolve)	109-86-4	25	80	X
2-Methoxyethyl acetate (Methyl cellosolve acetate)	110-49-6	25	120	X
Methyl acetate	79-20-9	200	610	
Methyl acetylene (propyne)	74-99-7	1,000	1,650	
Methyl acetylene-propadiene mixture (MAPP)		1,000	1,800	
Methyl acrylate	96-33-3	10	35	X
Methylacrylonitrile	**126-98-7**	**1**	**3**	**X**
Methylal (dimethoxymethane)	109-87-5	1,000	3,100	
Methyl alcohol (methanol)	67-56-1	200	260	
Methylamine	74-89-5	10	12	
Methyl amyl alcohol, see Methyl isobutyl carbinol				
Methyl (n-amyl) ketone	110-43-0	100	465	
Methyl bromide	**74-83-9**	**15** (C) 20	**60** (C) 80	**X**
Methyl butyl ketone, see 2-Hexanone				
Methylcyclohexane	108-87-2	500	2,000	
Methylcyclohexanol	**25639-42-3**	**50**	**235**	
o-Methylcyclohexanone	**583-60-8**	**50**	**230**	**X**

TABLE Z-1 – ADOPTED VALUES (IN ALPHABETICAL ORDER)				
Substance	**CAS No. [c]**	**ppm [a]**	**mg/m³ [b]**	**Skin**
2-Methylcyclopentadienyl manganese tricarbonyl (as Mn)	**12108-13-3**	**0.1**	**0.2**	**X**
Methyl demeton	**8022-00-2**	**—**	**0.5**	**X**
Methyl ethyl ketone (MEK), see 2-Butanone				
Methyl formate	107-31-3	100	250	
Methyl iodide	74-88-4	5	28	X
Methyl isoamyl ketone	110-12-3	100	475	
Methyl isobutyl carbinol	108-11-2	25	100	X
Methyl isobutyl ketone, see Hexone				
Methyl isocyanate	624-83-9	0.02	0.05	X
Methyl mercaptan	**74-93-1**	**0.5** (C) 10	**1** (C) 20	
Methyl methacrylate	80-62-6	100	410	
Methyl parathion	**298-00-0**	**—**	**0.2**	**X**
Methyl propyl ketone, see 2-Pentanone				
Methyl silicate	**681-84-5**	**(C) 5**	**(C) 30**	
a-Methyl styrene	98-83-9	(C) 100	(C) 480	
Methylene bisphenyl isocyanate (MDI)	**101-68-8**	**(See Table Z-2 -- diisocyanates)**		
Methylenedianiline (MDA)		(See 437-004-9780)	0.01	
Methylene Chloride	75-09-2	25		
Mineral Wool Fiber		**—**	**10**	
MOCA [4,4'-Methylene bis (2-chloroaniline)] (See 437-002-0346)	**101-14-4**			
Molybdenum **(soluble compounds)** **(insoluble compounds)**	**7439-98-7**	 **—** **—**	 **5** **10**	
Monomethyl aniline	100-61-8	2	9	X
Monomethyl hydrazine	60-34-4	(C) 0.2	(C) 0.35	X
Morpholine	110-91-8	20	70	X
Naphtha (coal tar)	8030-30-6	100	400	
Naphthalene	91-20-3	10	50	
Naphthalene diisocyanate (NDI)	**3173-72-6**		(See Table Z-2)	
alpha-Naphthylamine	134-32-7		(See 437-004-9090)	
beta-Naphthylamine	91-59-8		(See 437-004-9090)	
Nickel carbonyl (as Ni)	13463-39-3	0.001	0.007	
Nickel, metal and insoluble compounds, as Ni	7440-02-0	—	1	
Nickel, soluble compounds, (as Ni)	7440-02-0	—	1	

TABLE Z-1 – ADOPTED VALUES (IN ALPHABETICAL ORDER)				
Substance	**CAS No. [c]**	**ppm [a]**	**mg/m^3 [b]**	**Skin**
Nicotine	**54-11-5**	**0.075**	**0.5**	**X**
Nitric acid	7697-37-2	2	5	
Nitric oxide	10102-43-9	25	30	
p-Nitroaniline	100-01-6	1	6	X
Nitrobenzene	98-95-3	1	5	X
4-Nitrodiphenyl	92-93-3		(See 437-004-9090)	
p-Nitrochlorobenzene	100-00-5	—	1	X
Nitroethane	79-24-3	100	310	
Nitrogen dioxide	10102-44-0	(C) 5	(C) 9	
Nitrogen trifluoride	7783-54-2	10	29	
Nitroglycerin	55-63-0	(C) 0.2	(C) 2	X
Nitromethane	75-52-5	100	250	
1-Nitropropane	108-03-2	25	90	
2-Nitropropane	79-46-9	25	90	
N-Nitrosodimethylamine			(See 437-004-9090)	
Nitrotoluene (all isomers)	88-72-2/ 99-08-1/ 99-99-0	5	30	X
Nitrotrichloromethane, see Chloropicrin				
Nitrous oxide	**10024-97-5**	**50**	**90**	
Octachloronaphthalene	2234-13-1	—	0.1	X
Octane	**111-65-9**	**400**	**1,900**	
Oil mist (mineral)	8012-95-1	—	5	
Oil mist, vapor		**—**	[g]	
Osmium tetroxide (as Os)	20816-12-0		0.002	
Oxalic acid	144-62-7	—	1	
Oxygen difluoride	7783-41-7	0.05	0.1	
Ozone	10028-15-6	0.1	0.2	
Parafin wax fume	**8002-74-2**	**—**	**1**	
Paraquat respirable dust	4685-14-7/ 1910-42-5/ 2074-50-2	—	0.5	X
Parathion	56-38-2	—	0.1	X
Particulates not otherwise regulated (PNOR) [f]				
Total Dust		**—**	**10**	
Respirable Fraction		**—**	**5**	
Pentaborane	19624-22-7	0.005	0.01	
Pentachloronaphthalene	1321-64-8	—	0.5	X
Pentachlorophenol	87-86-5	—	0.5	X

TABLE Z-1 – ADOPTED VALUES (IN ALPHABETICAL ORDER)				
Substance	**CAS No. [c]**	**ppm [a]**	**mg/m^3 [b]**	**Skin**
Pentaerythritol	**115-77-5**			
Total Dust		**—**	**10**	
Respirable Fraction		**—**	**5**	
Pentane	**109-66-0**	**500**	**1,500**	
2-Pentanone (Methyl propyl ketone)	107-87-9	200	700	
Perchloroethylene (tetrachloroethylene)	127-18-4		(See Table Z-2)	
Perchloromethyl mercaptan	594-42-3	0.1	0.8	
Perchloryl fluoride	7616-94-6	3	13.5	
Perlite	**93763-70-3**			
Total Dust		**—**	**10**	
Respirable Fraction		**—**	**5**	
Petroleum distillates (naphtha) (Rubber Solvent)		500	2,000 [g]	
Phenol	108-95-2	5	19	X
Phenothiazine	**92-84-2**	**—**	**5**	**X**
p-Phenylene diamine	106-50-3	—	0.1	X
Phenyl ether (vapor)	101-84-8	1	7	
Phenyl ether – diphenyl mixture (vapor)	8004-13-5	1	7	
Phenylethylene, see Styrene				
Phenyl glycidyl ether (PGE)	122-60-1	10	60	
Phenylhydrazine	100-63-0	5	22	X
Phenylphosphine	**638-21-1**	**(C) 0.05**	**(C) 0.25**	
Phosdrin (Mevinphos®)	7786-34-7		0.1	X
Phosgene (carbonyl chloride)	75-44-5	0.1	0.4	
Phosphine	7803-51-2	0.3	0.4	
Phosphoric acid	7664-38-2	—	1	
Phosphorus (yellow)	7723-14-0	—	0.1	
Phosphorus pentachloride	10026-13-8	—	1	
Phosphorus pentasulfide	1314-80-3	—	1	
Phosphorus trichloride	7719-12-2	0.5	3	
Phthalic anhydride	85-44-9	2	12	
Picloram	**1918-02-1**			
Total Dust		**—**	**10**	
Respirable Fraction		**—**	**5**	
Picric acid	88-89-1	—	0.1	X
Pindone (2-Pivalyl-1, 3-indan-dione)	83-26-1	—	0.1	
Plaster of Paris	**26499-65-0**			
Total Dust		**—**	**10**	
Respirable Fraction		**—**	**5**	
Platinum (Soluble Salts) as Pt	7440-06-4	—	0.002	
Polychlorobiphenyls, see Chloro-diphenyls				

TABLE Z-1 – ADOPTED VALUES (IN ALPHABETICAL ORDER)				
Substance	**CAS No. [c]**	**ppm [a]**	**mg/m^3 [b]**	**Skin**
Portland Cement **Total Dust** **Respirable Fraction**	**65997-15-1**	 **—** **—**	 **10** **5**	
Propane	74-98-6	1,000	1,800	
Beta-Propiolactone	57-57-8		(See 437-004-9090)	
Propargyl alcohol	**107-19-7**	**1**	**—**	**X**
n-Propyl acetate	109-60-4	200	840	
n-Propyl alcohol	71-23-8	200	500	
n-Propyl nitrate	627-13-4	25	110	
Propylene dichloride	78-87-5	75	350	
Propylene glycol monomethyl ether	**107-98-2**	**100**	**360**	
Propylene imine	75-55-8	2	5	X
Propylene oxide	75-56-9	100	240	
Propyne, see Methyl acetylene				
Pyrethrum	8003-34-7	—	5	
Pyridine	110-86-1	5	15	
Quinone	106-51-4	0.1	0.4	
RDX (Cyclonite)	**121-82-4**	**—**	**1.5**	**X**
Rhodium, Metal fume and dusts, as Rh Soluble salts	 7440-16-6 7440-16-6	 — —	 0.1 0.001	
Ronnel	**299-84-3**	**—**	**10**	
Rosin core solder pyrolysis products (as Formaldehyde)		**—**	**0.1**	
Rotenone	83-79-4	—	5	
Rouge **Total Dust** **Respirable Fraction**		 **—** **—**	 **10** **5**	
Selenium compounds (as Se)	7782-49-2	—	0.2	
Selenium hexafluoride (as Se)	7783-79-1	0.05	0.4	
Silica			(See Table Z-3)	
Silicon **Total Dust** **Respirable Fraction**	**7440-21-3**	 **—** **—**	 **10** **5**	
Silicon carbide **Total Dust** **Respirable Fraction**	**409-21-2**	 **—** **—**	 **10** **5**	
Silver, metal and soluble compounds (as Ag)	7440-22-4	—	0.01	
Sodium fluoroacetate	62-74-8	—	0.05	X
Sodium hydroxide	1310-73-2	—	2	

TABLE Z-1 – ADOPTED VALUES (IN ALPHABETICAL ORDER)				
Substance	**CAS No. [c]**	**ppm [a]**	**mg/m^3 [b]**	**Skin**
Starch **Total Dust** **Respirable Fraction**	**9005-25-8**	 **—** **—**	 **10** **5**	
Stibine	7803-52-3	0.1	0.5	
Stoddard solvent	**8052-41-3**	**200**	**1,150**	
Strychnine	57-24-9	—	0.15	
Styrene	100-42-5		(See Table Z-2)	
Subtilisins (Proteolytic enzymes) (as 100% pure crystalline enzyme)	**1395-21-7**	**—**	**(C) 0.0003**	
Sucrose **Total Dust** **Respirable Fraction**	**57-50-1**	 **—** **—**	 **10** **5**	
Sulfur dioxide	7446-09-5	5	13	
Sulfur hexafluoride	2551-62-4	1,000	6,000	
Sulfuric acid	7664-93-9	—	1	
Sulfur monochloride	10025-67-9	1	6	
Sulfur pentafluoride	5714-22-7	0.025	0.25	
Sulfur tetrafluoride	**7783-60-0**	**0.1**	**0.4**	
Sulfuryl fluoride	2699-79-8	5	20	
Systox, see Demeton®				
2, 4, 5-T	93-76-5	—	10	
Tantalum, metal and oxide dust	7440-25-7	—	5	
TEDP (Sulfotepp)	3689-24-5	—	0.2	X
Tellurium and compounds (as Te)	13494-80-9	—	0.1	
Tellurium hexafluoride (as Te)	7783-80-4	0.02	0.2	
Temephos **Total Dust** **Respirable Fraction**	**3383-96-8**	 **—** **—**	 **10** **5**	
TEPP (Tetraethyl pyrophosphate)	**107-49-3**	**0.004**	**0.05**	**X**
Terphenyls	26140-60-3	(C) 1	(C) 9	
1, 1, 1, 2-Tetrachloro-2, 2-difluoro-ethane	76-11-9	500	4,170	
1, 1, 2, 2-Tetrachloro-1, 2-difluoro-ethane	76-12-0	500	4,170	
1, 1, 2, 2-Tetrachloroethane	79-34-5	5	35	X
Tetrachloroethylene, see Perchloroethylene				
Tetrachloronaphthalene	1335-88-2	—	2	X
Tetrachloromethane, see Carbon tetrachloride				
Tetraethyl lead (as Pb)	78-0-2	—	.075	X
Tetrahydrofuran	109-99-9	200	590	
Tetramethyl lead (as Pb)	75-74-1	—	0.075	X

TABLE Z-1 – ADOPTED VALUES (IN ALPHABETICAL ORDER)				
Substance	**CAS No. [c]**	**ppm [a]**	**mg/m^3 [b]**	**Skin**
Tetramethyl succinonitrile	3333-52-6	0.5	3	X
Tetranitromethane	509-14-8	1	8	
Tetryl (2, 4, 6-trinitro-phenyl-methylnitramine)	479-45-8	—	1.5	X
Thallium (soluble compounds) as Tl	7440-28-0	—	0.1	X
4,4'-Thiobis (6-tert, Butyl-m-cresol) **Total Dust** **Respirable Fraction**	**96-69-5**	 **—** **—**	 **10** **5**	
Thiram	**137-26-8**		**(See 437-004-9720)**	
Tin (inorganic compounds, except oxides) as Sn	7440-31-5	—	2	
Tin (organic compounds)	7440-31-5	—	0.1	
Tin oxide **Total Dust** **Respirable Fraction**	**1332-29-2**	 **—** **—**	 **10** **5**	
Titanium dioxide	**13463-67-7**	**—**	**10**	
Toluene (toluol)	108-88-3		(See Table Z-2)	
Toluene diisocyanate (TDI),	**584-84-9**		(See Table Z-2)	
o-Toluidine	95-53-4	5	22	X
Toxaphene, see Chlorinated camphene				
Tributyl phosphate	126-73-8	—	5	
1, 1, 1-Trichloroethane, see Methyl chloroform				
1, 1, 2-Trichloroethane	79-00-5	10	45	X
Trichloroethylene	79-01-6		(See Table Z-2)	
Trichloromethane, see Chloroform				
Trichloronaphthalene	1321-65-9	—	5	X
1, 2, 3-Trichloropropane	96-18-4	50	300	
1, 1, 2-Trichloro 1, 2, 2-trifluoro-ethane	76-13-1	1,000	7,600	
Triethylamine	121-44-8	25	100	
Trifluorobromomethane	75-63-8	1,000	6,100	
Trimethyl benzene	**25551-13-7**	**25**	**120**	
2, 4, 6-Trinitrophenol, see Picric acid				
2, 4, 6-Trinitrophenylmethyl-nitramine, see Tetryl				
Trinitrotoluene (TNT)	118-96-7		1.5	X
Triorthocresyl phosphate	78-30-8	—	0.1	
Triphenyl phosphate	115-86-6	—	3	
Tungsten & compounds, as W **Soluble** **Insoluble**	**7440-33-7**	 **—** **—**	 **1** **5**	

TABLE Z-1 – ADOPTED VALUES (IN ALPHABETICAL ORDER)				
Substance	**CAS No. [c]**	**ppm [a]**	**mg/m^3 [b]**	**Skin**
Turpentine	8006-64-2	100	560	
Uranium (as U)	7440-61-1			
Soluble compounds		—	0.05	
Insoluble compounds		**—**	**0.2**	
Vanadium respirable dust				
(as V_2O_5)	**1314-62-1**	**—**	**(C) 0.5**	
Fume (as V_2O_5)	**1314-62-1**	**—**	**(C) 0.05**	
Vegetable oil mist				
Total Dust		**—**	**10**	
Respirable Fraction		**—**	**5**	
Vinyl acetate	**108-05-4**	**10**	**30**	
Vinyl benzene, see Styrene				
Vinyl bromide	**593-60-2**	**250**	**1,100**	
Vinyl chloride (See 1910.1017)	75-01-4			
Vinyl cyanide, see Acrylonitrile				
Vinyl toluene	25013-15-4	100	480	
Warfarin	81-81-2	—	0.1	
Wood Dust (non-allergenic)		**—**	**10**	
Xylene (o-, m-, p-isomers)	1330-20-7	100	435	
Xylidine	1300-73-8	5	25	X
Yttrium	7440-65-5	—	1	
Zinc chloride fume	7646-85-7	—	1	
Zinc oxide	**1314-13-2**			
Total Dust		**—**	**10**	
Respirable Fraction		**—**	**5**	
Zinc oxide fume	1314-13-2	—	5	
Zinc stearate	**557-05-1**			
Total Dust		**—**	**10**	
Respirable Fraction		**—**	**5**	
Zirconium compounds (as Zr)	7440-67-7	—	5	

NOTE: PNOR means “particles not otherwise regulated.”

Table Z-1 FOOTNOTES:

[a] Parts of vapor or gas per million parts of contaminated air by volume at 25 degrees C and 760 torr.

[b] Milligrams of substance per cubic meter of air. When entry is in this column only, the value is exact; when listed with a ppm entry, it is approximate.

[c] The CAS number is for information only. Enforcement is based on the substance name. For an entry covering more than one metal compound, measured as the metal, the CAS number for the metal is given - not CAS numbers for the individual compounds.

(d) The benzene standard in 4/Z, OAR 437-004-9640 applies to all occupational exposures to benzene except in some circumstances the distribution and sale of fuels, sealed containers and pipelines, coke production, oil and gas drilling and production, natural gas processing, and the percentage exclusion for liquid mixtures; for the excepted subsegments, the benzene limits in Table Z-2 apply. See 4/Z, OAR 437-004-9640 for specific circumstances.

(e) All inert or nuisance dusts, whether mineral, inorganic, or organic, not listed specifically by substance name are covered by the Particulates Not Otherwise Regulated (PNOR) limit that is the same as the inert or nuisance dust limit of Table Z-3.

(f) Usually a mixture, in general the aromatic hydrocarbon content will determine which TWA applies.

(g) If the exposure limit in 1910.1026 is stayed or is otherwise not in effect, the exposure limit is a ceiling of 0.1 mg/m^3.

(h) See Table Z-2 for the exposure limit for any operations or sectors where the exposure limit in 1910.1026 is stayed or is otherwise not in effect.

Oregon Table Z-2 – Adopted Permissible Exposure Limits (PEL)					
Substance	**8-Hour Time-Weighted Average**	**Acceptable Ceiling Con-centration**	**Acceptable Max. Peak Above the Acceptable Ceiling Concentration for an 8-Hour Shift**		**Skin**
			Concen-tration	**Maximum Duration**	
Benzene [(a)] (Z87.4-1969)	10 ppm	25 ppm	50 ppm	10 min.	
Beryllium, and beryllium compounds (Z37.29-1970)	2 µg/m^3	5 µg/m^3	25 µg/m^3	30 min.	
Cadmium fume [(b)] (Z37.5-1970)	0.1 mg/m^3	0.3 mg/m^3			
Cadmium dust [(b)] (Z37.5-1970)	0.2 mg/m^3	0.6 mg/m^3			
Carbon disulfide (Z37.3-1968)	20 ppm	30 ppm	100 ppm	30 min.	X
Carbon tetrachloride (Z37.17-1967)	10 ppm	25 ppm	200 ppm	5 min. in any 4 hrs	
Chromic acid and chromates (Z37.7-1971) (as CrO_3)[c]		0.1 mg/m^3			
Ethylene dibromide (Z37.31-1970)	20 ppm	25 ppm	50 ppm	5 min.	X
Ethylene dichloride (Z37.21-1969)	50 ppm	100 ppm	200 ppm	5 min. in any 3 hrs	
Fluoride as dust (Z37.28-1969)	2.5 mg/m^3				
Formaldehyde (see 1910.1048)					
Hydrogen fluoride (Z37.28-1969)	3 ppm				
Hydrogen sulfide (Z37.2-1966)		20 ppm	50 ppm	10 min. once, only if no other measurable exposure occurs	
Mercury (Z37.8-1971)	**0.05 mg/m^3**	**0.1 mg/m^3**			**X**
Methyl chloride (Z37.18-1969)	100 ppm	200 ppm	300 ppm	5 min. in any 3 hrs	
Organo (alkyl) mercury (Z37.30-1969)	**0.001 mg/m^3**	**0.01 mg/m^3**			**X**
Styrene (Z37.15-1969)	100 ppm	200 ppm	600 ppm	5 min. in any 3 hrs.	
Tetrachloroethylene (Z37.22-1967)	100 ppm	200 ppm	300 ppm	5 min. in any 3 hrs.	
Toluene (Z37.12-1967)	**100 ppm**	**300 ppm**	**500 ppm**	**10 min.**	
Trichloroethylene (Z37.19-1967)	100 ppm	200 ppm	300 ppm	5 min. in any 2 hrs.	

Oregon Table Z-2 (Continued)					
Substance	**8-Hour Time-Weighted Average**	**Acceptable Ceiling Con-centration**	**Acceptable Max. Peak Above the Acceptable Ceiling Concentration for an 8-Hour Shift**		**Skin**
			Concen-tration	**Maximum Duration**	
Diisocyanates					
Dicyclohexylmethane 4,4'-diisocyanate (hydrogenated MDI)	**.055 mg/m .005 ppm**	**0.210 mg/m^3 0.02 ppm**			
Diphenylmethane diisocyanate (MDI)	**.050 mg/m^3 .005 ppm**	**0.200 mg/m^3 0.02 ppm**			
Hexamethylene diisocyanate (HDI)	**.035 mg/m^3 .005 ppm**	**0.140 mg/m^3 0.02 ppm**			
1,6 Hexamethylene diisocyanated Based Adduct (includes HDI-Biuret trimer, and other polymeric forms of HDI, including isocyanurates)	**0.5 mg/m^3**	**1.0 mg/m^3**			
Isophorone diisocyanate (IPDI)	**.045 mg/m^3 .005 ppm**	**0.180 mg/m^3 0.02 ppm**			
Napthalene diisocyanate (NDI)	**.040 mg/m^3 .005 ppm**	**0.170 mg/m^3 0.02 ppm**			
Toluene diisocyanate (TDI)	**.035 mg/m^3 .005 ppm**	**0.140 mg/m^3 0.02 ppm**			

NOTE: Bold print identifies substances for which the Oregon Permissible Exposure Limits (PELs) are different than the federal limits.

Table Z-2 FOOTNOTES:

[(a)] This standard applies to the industry segments exempt from the 1 ppm 8-hour TWA and 5 ppm STEL of the Benzene Standard, 4/Z, OAR 437-004-9640.

[(b)] This standard applies to any operations on sectors for which the Cadmium Standard, 4/Z, OAR 437-004-9620, is stayed or otherwise not in effect.

[(c)] This standard applies to any operations or sectors for which the exposure limit in the Chromium (VI) standard, 1910.1026, is stayed or is otherwise not in effect.

Oregon TABLE Z-3 – Permissible Exposure Limits (PEL-TWA) for MINERAL DUSTS		
Substance	**mppcf [a]**	**mg/m³**
Silica:		
Crystalline	…….	0.1 [e]
Quartz (respirable) ……	…….	
Quartz (total dust) ……..	…….	$\frac{30mg/m^3}{\%SiO_2 + 2}$
Cristobalite (Respirable)	…….	0.05
Tridymite: Use 1/2 the value calculated from the formulae for quartz.	…….	…….
Amorphous, including natural diatomaceous earth ……	20	$\frac{80mg/m^3}{\%SiO_2}$
Silicates (less than 1 percent crystalline silica):		
Mica ……	20	
Soapstone ……..	20	
Talc (not containing asbestos) ……...	20 [c]	
Talc (containing asbestos) Use asbestos limit.	…….	
Tremolite, asbestiform (see OAR 437-004-9050, Asbestos)	…….	
Portland cement ……...	50	
Graphite (Natural) …….		5
Coal Dust: Respirable fraction less than 5% SiO_2 ……..		2.4 [e] [f]
Coal Dust: Respirable fraction greater than 5% SiO_2 …….		0.1 [e]
Inert or Nuisance Dust (PNOR): [d]		
Respirable fraction ……		**5**
Total dust …….		**10**

NOTE: Bold print identifies substances for which the Oregon Permissible Exposure Limits (PEL-TWAs) are different than the federal limits.

Conversion factors: mppcf x 35.3 = million particles per cubic meter = particles per c.c.

Table Z-3 FOOTNOTES:

[a] Millions of particles per cubic foot of air, based on impinger samples counted by light-field techniques.

[b] The percentage of crystalline silica in the formula is the amount determined from airborne samples, except in those instances in which other methods are applicable.

[c] Containing less than 1 percent quartz; if 1 percent quartz or more, use quartz limit.

[d] All inert or nuisance dusts, whether mineral, inorganic, or organic, not listed specifically by substance name are covered by this limit, which is the same as the Particulates Not Otherwise Regulated (PNOR) limit in Table Z-1.

(e) Calculate both concentration and percent quartz for the application of this limit from the fraction passing a size-selector with the following characteristics.

(f) The measurements under this note refer to the use of an AEC (now NRC) instrument. If the respirable fraction of coal dust is determined with a MRE the figure corresponding to that of 2.4 mg/m^3 in the table for coal dust is 4.5 mg/m^3.

Stat. Auth.: ORS 654.025(2) and 656.726(4).
Stats. Implemented: ORS 654.001 through 654.295.
Hist: OR-OSHA Admin. Order 4-1998, f. 8/28/98, ef. 10/1/98.
OR-OSHA Admin. Order 4-2001, f. 2/5/01, ef. 2/5/01.
OR-OSHA Admin. Order 9-2001, f. 9/14/01, ef. 9/14/01.
OR-OSHA Admin. Order 6-2006, f. 8/30/06, ef. 8/30/06.
OR-OSHA Admin. Order 4-2012, f. 9/19/12, ef. 1/1/13.

437-004-9010 Fumigated Areas.

(1) Scope: Covers pesticides which when applied, forms a gas to control pests.

(2) Definitions:

(a) Types of fumigants include aluminum phosphide, methyl bromide, chloropicrin, 1,3-D (Telone), dazomet, metam sodium and iodomethane.

(b) Types of fumigations include soil, space (warehouse), vertical storage, flat storage, tarpaulin, spot (includes grain handling equipment, empty tanks and empty silos), chamber, vehicle and rodent burrows.

(3) All work with fumigants must follow the instructions and precautions in the manufacturer's application manual and on the product label and MSDS.

(4) All entry points into fumigated interior areas must have signs that identify the area as fumigated and prohibit entry.

(5) Leave the signs posted according to the instructions of the manufacturer of the fumigating chemical or until the hazard resulting from the fumigation is gone, whichever is the longer time.

(6) After fumigation, there must be a way to aerate the fumigated area without contaminating other areas where there are employees.

(7) If the fumigation process requires the worker to be in the fumigated area, there must be at least one other person present to assist during an emergency. That person must have the same training and access to the same personal protective equipment as the first worker.

(8) Fumigation chambers or areas must not allow the toxic fumigants to escape or otherwise enter other areas where they can be hazardous to other workers.

(9) If the fumigant concentration can exceed 10 percent of the lower explosive limit (LEL), all electrical equipment, fittings, and connections must be vapor proof.

Stat. Auth.: ORS 654.025(2) and 656.726(4).
Stats. Implemented: ORS 654.001 through 654.295.
Hist: OR-OSHA Admin. Order 9-2006, f. 9/22/06, ef. 9/22/06.

437-004-9050 Asbestos.

Definitions:

Asbestos includes chrysotile, amosite, crocidolite, tremolite asbestos, anthophyllite asbestos, actinolite asbestos and any of these minerals that have been chemically treated or altered.

Asbestos-containing material (ACM) means any material containing more than 1% asbestos.

Presumed asbestos containing material (PACM) means thermal system insulation and surfacing material found in buildings constructed no later than 1980. The designation of a material as "PACM" may be rebutted pursuant to Division 2/Z, 1910.1001(j)(8).

(1) The employer is responsible to determine, before work begins, if any task or activity assigned to workers will result in a potential exposure to asbestos.

(2) Work that exposes employees to asbestos must comply with Division 4/Z, 1910.1001, Asbestos; except that construction activities exposing employees to asbestos must comply with Division 3/Z, 1926.1101, Asbestos.

NOTE: Construction activities are building, altering and repairing, and include painting.

(3) The employer must periodically examine all asbestos-containing material in the workplace to ensure that there is no deterioration or damage that could cause employee exposure.

(4) If you find damage or deterioration, the material must be repaired, encapsulated, or removed consistent with the requirements in Division 3/Z, 1926.1101, Asbestos.

NOTES: Tasks or work activities that could expose employees to asbestos include the following:

- Housekeeping or maintenance activities on workplace surfaces or systems with asbestos-containing materials (examples include flooring, ceiling tiles, roofing, siding, boilers, heaters, insulation, and fireproofing);
- Inspection, disassembly, repair and assembly of automotive or farm vehicle brakes and clutches;
- Demolition or salvage of structures where asbestos-containing materials are present;
- New construction, alteration, or renovation of structures, substrates, or portions thereof with asbestos-containing materials; and,
- Routine or emergency cleanup of asbestos-containing materials.

Employers who have pipe systems that are insulated with asbestos-containing materials in their workplaces, must also comply with Division 4/Z, OAR 437-004-9850, Pipe Labeling.

Stat. Auth.: ORS 654.025(2) and 656.726(4).
Stats. Implemented: ORS 654.001 through 654.295.
Hist: OR-OSHA Admin. Order 4-1998, f. 8/28/98, ef. 10/1/98.
OR-OSHA Admin. Order 4-2012, f. 9/19/12, ef. 1/1/13.

437-004-9090 13 Carcinogens.

Definitions:
The 13 carcinogens are:

- 4-Nitrobiphenyl, CAS 92-93-3;
- alpha-Naphthylamine, CAS 134-32-7;
- Methyl chloromethyl ether, CAS 107-30-2;
- 3,3-Dichlorobenzidine (and its salts), CAS 91-94-1;
- bis-Chloromethyl ether, CAS 542-88-1;
- beta-Naphthylamine, CAS 91-59-8;
- Benzidine, CAS 92-87-5;
- 4-Aminodiphenyl, CAS 92-67-1;
- Ethyleneimine, CAS 151-56-4;
- beta-Propiolactone, CAS 57-57-8;
- 2-Acetylaminoflourene, CAS 53-96-3;
- 4-Dimethylaminoazo-benzene, CAS 60-11-7; and
- N-Nitrosodimethylamine, CAS 62-75-9.

(1) The employer is responsible to determine, before work begins, if any task or activity assigned to workers will result in potential exposure to any of the 13 carcinogens.

(2) Work that exposes employees to any of the 13 carcinogens must comply with Division 2/Z, 1910.1003, 13 Carcinogens.

Stat. Auth.: ORS 654.025(2) and 656.726(4).
Stats. Implemented: ORS 654.001 through 654.295.
Hist: OR-OSHA Admin. Order 4-1998, f/8/28/98, ef. 10/1/98.
OR-OSHA Admin. Order 4-2012, f. 9/19/12, ef. 1/1/13.

437-004-9600 Lead.

Definition:

Lead means elemental, metallic lead (chemical formula Pb), all inorganic lead compounds, and organic lead soaps. All other organic lead compounds are excluded.

(1) The employer is responsible to determine, before work begins, if any task or activity assigned to workers will result in a potential exposure to lead.

(2) Work that exposes employees to lead must comply with Division 2/Z, 1910.1025, Lead; except that construction activities exposing employees to lead must comply with Division 3/D, 1926.62, Lead.

NOTES:
Construction activities are building, altering and repairing and include painting.

Tasks or work activities that could expose employees to lead include:

- Demolition or salvage of structures where lead-containing materials are present;
- New construction, alteration, or renovation of structures, substrates, or portions thereof with lead-containing materials;
- Routine or emergency cleanup of lead-containing materials;
- Using lead-containing paints or pigments;
- Cutting, brazing, burning, heating, grinding or welding surfaces with lead-containing paints or pigments; and
- Soldering with lead-containing solder.

Stat. Auth.: ORS 654.025(2) and 656.726(4).
Stats. Implemented: ORS 654.001 through 654.295.
Hist: OR-OSHA Admin. Order 4-1998, f. 8/28/98, ef. 10/1/98.
OR-OSHA Admin. Order 9-2006, f. 9/22/06, ef. 9/22/06.
OR-OSHA Admin. Order 4-2012, f. 9/19/12, ef. 1/1/13.

437-004-9620 Cadmium.

Definition:

Cadmium means the element cadmium (Cd) and all cadmium compounds.

(1) The employer is responsible to determine, before work begins, if any task or activity assigned to workers will result in a potential exposure to cadmium.

(2) Work that exposes employees to cadmium must comply with Division 2/Z 1910.1027, Cadmium; except that construction activities exposing employees to cadmium must comply with Division 3/Z, 1926.1127, Cadmium.

NOTE: Construction activities are building, altering, and repairing and include painting.

Stat. Auth.: ORS 654.025(2) and 656.726(4).
Stats. Implemented: ORS 654.001 through 654.295.
Hist: OR-OSHA Admin. Order 4-1998, f. 8/28/98, ef. 10/1/98.
OR-OSHA Admin. Order 4-2012, f. 9/19/12, ef. 1/1/13.

437-004-9626 Chromium (VI).

Definition:

Chromium (VI) [hexavalent chromium or Cr(VI)] means chromium with a valence of positive six, in any form and in any compound.

(1) The employer is responsible to determine, before work begins, if any task or activity assigned to workers will result in a potential exposure to hexavalent chromium.

(2) Work that exposes employees to hexavalent chromium must comply with Division 2/Z 1910.1026, Chromium (VI); except that construction activities exposing employees to hexavalent chromium must comply with Division 3/Z, 1926.1126, Chromium (VI).

NOTE: Construction activities are building, altering and repairing and include painting.

Stat. Auth.: ORS 654.025(2) and 656.726(4).
Stats. Implemented: ORS 654.001 through 654.295.
Hist: OR-OSHA Admin. Order 4-2012, f. 9/19/12, ef. 1/1/13.

437-004-9640 Benzene.

Definition:

Benzene (Chemical formula C_6H_6, CAS 71-43-2) means liquefied or gaseous benzene and includes benzene in liquid mixtures and benzene vapors released by these liquids. It does not include trace amounts of unreacted benzene in solid materials.

(1) The employer is responsible to determine, before work begins, if any task or activity assigned to workers will result in a potential exposure to benzene.

(2) Tasks or activities within the scope of the Division 2, Benzene rule must comply with Division 2/Z, 1910.1028, Benzene.

(3) Tasks or activities that are not within the scope of the Division 2, Benzene rule must comply with the permissible exposure limits listed in Division 4/Z, OAR 437-004-9000, Table Z-2.

NOTES:
An example of a task or activity that is within the scope of the Division 2, Benzene rule is an employee dispensing gasoline or motor fuels containing benzene for more than 4 hours per day in an indoor location.

Examples of task or activities that are NOT within the scope of the Division 2, Benzene rule include:

- The storage, transportation, distribution, dispensing, sale or use of gasoline, motor fuels, or other fuels containing benzene after final discharge from bulk wholesale storage facilities.
- The storage, transportation, distribution or sale of benzene or liquid mixtures containing more than 0.1 percent benzene in intact containers while sealed in a way to contain benzene vapors or liquid.

Stat. Auth.: ORS 654.025(2) and 656.726(4).
Stats. Implemented: ORS 654.001 through 654.295.
Hist: OR-OSHA Admin. Order 4-1998, f. 8/28/98, ef. 10/1/98.
OR-OSHA Admin. Order 4-2012, f. 9/19/12, ef. 1/1/13.

437-004-9650 Bloodborne Pathogens.

Definitions:

Blood means human blood, human blood components and products made from human blood.

Bloodborne Pathogens means pathogenic micro-organisms that are present in human blood and can cause disease in humans. These pathogens include, but are not limited to, hepatitis B virus (HBV) and human immunodeficiency virus (HIV).

Contaminated means the presence or the reasonably anticipated presence of blood or other potentially infectious materials on an item or surface.

Occupational exposure means reasonably anticipated skin, eye, mucous membrane, or parenteral contact with blood or other potentially infectious materials that may result from the performance of an employee's duties.

Other Potentially Infectious Materials means:

- Human body fluids with visible contamination of blood, and all body fluids in situations where it is difficult or impossible to differentiate between body fluids;
- Any unfixed tissue or organ (other than intact skin) from a human (living or dead); and
- HIV-containing cell or tissue cultures, organ cultures, and HIV- or HBV-containing culture medium or other solutions; and blood, organs, or other tissues from experimental animals infected with HIV or HBV.

(1) The employer is responsible to determine, before work begins, if any task or activity assigned to workers will result in an occupational exposure to bloodborne pathogens.

(2) Work that exposes employees to bloodborne pathogens must comply with Division 2/Z, 1910.1030, Bloodborne Pathogens.

NOTE:
Examples of tasks or work activities with a potential for occupational exposures to bloodborne pathogens in agricultural workplaces include:

- Employees performing janitorial duties that include cleaning up human blood or OPIM;
- Employees who are required, as part of their job duties, to administer first aid to others that could include contact with another person's blood or OPIM.

Stat. Auth.: ORS 654.025(2) and 656.726(4).
Stats. Implemented: ORS 654.001 through 654.295.
Hist: OR-OSHA Admin. Order 4-1998, f. 8/28/98, ef. 10/1/98.
OR-OSHA Admin. Order 4-2012, f. 9/19/12, ef. 1/1/13.

437-004-9710 Acrylonitrile.

Definition.

Acrylonitrile or "AN" (Chemical formula CH_2=CHCN, CAS 107-13-1) means acrylonitrile monomer and includes Liquid AN.

Liquid AN means acrylonitrile monomer in liquid form, and liquid or semi-liquid polymer intermediates, including slurries, suspensions, emulsions, and solutions, made during the polymerization of AN.

(1) The employer is responsible to determine, before work begins, if any task or activity assigned to workers will result in a potential exposure to acrylonitrile.

(2) Work that exposes employees to acrylonitrile must comply with Division 2/Z, 1910.1045, Acrylonitrile.

NOTE:
The Division 2 Acrylonitrile rule does not apply to exposures which result solely from the processing, use, and handling of the following materials:

- ABS resins, SAN resins, nitrile barrier resins, solid nitrile elastomers, and acrylic and modacrylic fibers, when these listed materials are in the form of finished polymers, and products fabricated from such finished polymers;
- Materials made from and/or containing AN for which objective data is reasonably relied upon to demonstrate that the material is not capable – under the expected conditions of processing, use, and handling which will cause the greatest possible release – of releasing AN in airborne concentrations in excess of 1 ppm as an 8-hour time-weighted average, or
- Solid materials made from and/or containing AN which will not be heated above 170 degrees F. during handling, use, or processing.

Stat. Auth.: ORS 654.025(2) and 656.726(4).
Stats. Implemented: ORS 654.001 through 654.295.
Hist: OR-OSHA Admin. Order 4-1998, f. 8/28/98, ef. 10/1/98.
OR-OSHA Admin. Order 4-2012, f. 9/19/12, ef. 1/1/13.

437-004-9720 Thiram.

(1) Scope and application.

(a) These rules apply where worker exposure to thiram may occur during manufacture, storage, packaging, tree application, treated seedling handling, or use of thiram or thiram treated seedlings.

(b) These rules apply to the transportation of thiram or thiram treated trees except to the extent that the U. S. Department of Transportation may regulate the hazards covered by these rules.

(2) Definitions.

Clean – The absence of dirt or materials that may be harmful to a worker's health.

Large seedlings – Seedlings long enough or wide enough that during normal planting avoiding mouth of face contact with the thiram treated plant is difficult.

(3) General requirements.

(a) Permissible exposure limits.

(A) Do not expose workers to thiram at atmospheric concentrations more than 0.15 mg/m^3 over any 8-hour period; and

(B) Do not expose workers to thiram at atmospheric concentrations more than 0.30 mg/m^3 averaged over any period not longer than 15 minutes.

(C) Workers must not work more than 5 days in any 7-day period with or around thiram or thiram treated seedlings.

(D) Paragraph **(3)(a)(C)** above is not applicable if there is a specific thiram control program, beyond these rules and approved by the Administrator.

(b) Washing and worker hygiene.

(A) Workers must wash their hands before eating or smoking and when done working.

(B) At fixed work sites or planting units, provide warm (at least 85 degrees F, 29.4 degrees C) wash water and single use hand wiping materials for washing.

(C) Where warm water is not available within, or the means to access within, a 15 minutes travel time, provide clean water, soap and single-use towels.

(D) Advise every planter or nursery worker to bathe or shower daily.

(E) Wash or vacuum and wipe down the inside of crummies or other worker carrying vehicles at least weekly during thiram use.

(c) Personal protective measures.

(A) Workers must wear clothing that reduces skin contact with thiram on the legs, arms and torso.

(B) For those workers with thiram skin irritations, protect exposed areas with a suitable barrier cream.

(C) Workers may wear only impervious gloves.

(D) Workers' hands must be clean of thiram before placing them into gloves.

(E) Provide nursery applicators with approved respirators, disposable coveralls or rubber slickers or other impervious clothing, rubberized boots, head covers and rubberized gloves. They must use the respirators according to 4/I, OAR 437-004-1040, Respiratory Protection.

(F) Other than applicators, nursery workers who may suffer thiram exposure must have and use disposable coveralls or rubber slickers or other impervious clothing, impervious footwear and gloves, and head covers unless they use showers that comply with 4/J, OAR 437-004-1105, Sanitation.

(G) Provide eye protection that complies with 4/I, OAR 437-004-1035. Workers exposed to thiram such as during spraying, plug bundling, belt line grading and plugging or other operations must wear this eye protection.

(d) Respiratory protection.

(A) When worker exposure is more than the Permissible Exposure Limit (PEL), provide them with applicable, certified respiratory protection approved by NIOSH.

(B) Use and maintain respirators according to 4/I, OAR 437-004-1041, Respiratory Protection.

(C) Workers must wear respirators when planting large seedlings to avoid mouth and face contact with the thiram treated plant unless they use equally effective measures or planting practices.

(e) Food handling.

(A) Do not store or consume food, snacks, beverages, smoking materials, or any similar items in the packing area of the nursery.

(B) Crummies or other worker carrying vehicles must have a clean area for carrying lunches.

(C) The clean area of the vehicle must be above from the floor and not used to carry other than food or other consumable items.

(D) Do not carry lunches, food or other consumable items in tree planting bags.

(E) Minimize or eliminate worker exposure to thiram spray, including downwind driftings.

(F) Workers must stand upwind when burning bags that contained thiram or thiram treated seedlings.

(f) Thiram use and handling.

(A) Nurseries must develop a quality control program approved by the Administrator to ensure that they apply only the minimum amount of thiram necessary to achieve the desired anti-browsing results to the tree seedlings.

(B) Thiram treated seedlings must set between the time of spraying and packing.

(C) Keep seedlings moist during packing and when possible during planting.

(D) Vacuum or wash floors daily where thiram is used, do not sweep them.

(E) Remove silica chips covering seedling plugs at the nursery.

(g) Labeling.

(A) Rules enforced by the Oregon Department of Agriculture, or the U.S. Environmental Protection Agency (EPA), about the labeling of thiram treated seedlings, apply.

(B) If the Oregon Department of Agriculture, or EPA, has no thiram labeling rules, each container, bundle or wrapping of thiram treated seedlings must have a clearly legible and visible tag or label, of waterproof material and printing, on which is the following in English and Spanish:

CAUTION

These seedlings are treated with an animal repellent containing Thiram (tetramethyl thiuram disulfide) that may flake off during handling. Consumption of alcoholic beverages or use of alcohol-base creams or lotions during a time span from 12 hours before to 7 days after exposure to Thiram may result in nausea, headache, vomiting, fatigue, or flushness. Exposure to Thiram may also cause irritation of the eyes, nose, throat, or skin.

Thiram may interfere with or render ineffective medications taken by epileptics or heart patients with blood-clotting difficulties. Animal studies at very high concentrations (more than 250 mg/kg) suggest that Thiram may cause birth defects.

SAFETY PRECAUTIONS

1. Keep treated seedlings moist.

2. Wear clothing to reduce skin contact with Thiram to the legs, arms and torso.

3. A fiber or cloth face mask (respirator) may be worn at the planter's discretion, except that when planting large seedlings, you must wear a respirator to avoid mouth and face contact with thiram treated plants, unless you use equally effective measures

4. Wash exposed skin areas thoroughly after handling treated seedlings and before smoking, drinking, eating or going to the bathroom.

5. If Thiram flakes contact eyes, immediately flush eyes freely with water.

6. Bathe daily and change work clothes at least every other day.

PRECAUCION

Estas plantas han sido tratadas con un replente contra animales que tiene la substacia Thiram (tetramethyl thiuram disulfide) que puede desaparecer en manoseo. La consuncion de bebidas alcoholicas o el uso de cremas o lociones con base de alcohol dentro de 12 horas antes de ser expuesto o hasta 7 dias despues de ser expuesto a Thiram puede resultar en sintomas de nausea, dolor de cabeza, vomito, faiga o rubor. Contacto con Thiram puede causar irritacion de los ojos, nariz, garganta o piel.

Thiram puede interferir o desvalidar en completa las medicinas de los epilepticos o personas con condiciones de la corazon con dificultades de coagulacion de la sangre. Estudios con animals en concentraciones muy altas (mas que 250 mg/kg) indican que Thiram puede causar desformaciones fetales. Sin que cuando se sembra plantas de semillas grandes macaras estaran requerido a evitar contacto con la boca y la cara con plantas tratado con Thiram excepto cuando otros metodos igualmente efecaz estarah usados.

MEDIAS DE PRECAUCION

1. Guardar mojados las platas siempre.

2. El trabajador necesita usar ropa para reducir el contacto de Thiram con las piernas, brazos, y el torso.

3. Una mascara de fibre o garra (mascara) se puede usar a la discrecion del plantador.

4. Lavese bien los parten expuestos cuando trate los semillos antes de fumar, tomar, comer e ir al bano.

5. Se acaso el Thiram cae en sus ojos, imediatamente lavese los ojos libremente con agua.

6. Banese todos los dias y cambiese de ropa de trabajo por lo menos cada otro dia.

(C) Other containers or thiram handling areas must have signs and labels that comply with 4/J, OAR 437-004-1150 and 1180.

(h) Training.

(A) Where exposures to thiram may occur, train each worker about the hazards of thiram and precautions for its safe use and handling.

(B) The training must be approved by the Administrator.

(C) The training must include:

(i) The health hazard(s) of chronic exposure to thiram including the potential for birth defects, alcohol intolerance, and drug interaction.

(ii) The specific nature of work that could result in exposure to thiram and the necessary protective steps;

(iii) The purpose for, proper use, and limitations of protective devices including respirators and clothing;

(iv) The acute toxicity and skin irritation effects of thiram, and the necessary protective steps;

(v) The need for and requirements of excellent personal hygiene;

(vi) A review of the thiram rules at the worker's first training and indoctrination, and annually thereafter.

(D) Give each worker a copy of these thiram rules.

Stat. Auth.: ORS 654.025(2) and 656.726(4).
Stats. Implemented: ORS 654.001 through 654.295.
Hist: OR-OSHA Admin. Order 4-1998, f. 8/28/98, ef. 10/1/98.
OR-OSHA Admin. Order 9-2006, f. 9/22/06, ef. 9/22/06.

437-004-9740 Ethylene Oxide.

Definition:

Ethylene oxide or EtO means the organic compound with chemical formula C_2H_4O, and CAS 75-21-8.

(1) The employer is responsible to determine, before work begins, if any task or activity assigned to workers will result in a potential exposure to ethylene oxide.

(2) Work that exposes employees to ethylene oxide must comply with Division 2/Z, 1910.1047, Ethylene Oxide.

Stat. Auth.: ORS 654.025(2) and 656.726(4).
Stats. Implemented: ORS 654.001 through 654.295.
Hist: OR-OSHA Admin. Order 4-1998, f. 8/28/98, ef. 10/1/98.
OR-OSHA Admin. Order 4-2012, f. 9/19/12, ef. 1/1/13.

437-004-9760 Formaldehyde.

Definition:

Formaldehyde means the substance with chemical formula HCHO and CAS 50-00-0.

(1) The employer is responsible to determine, before work begins, if any task or activity assigned to workers will result in a potential exposure to formaldehyde.

(2) Work that exposes employees to formaldehyde must comply with Division 2/Z, 1910.1048, Formaldehyde.

Stat. Auth.: ORS 654.025(2) and 656.726(4).
Stats. Implemented: ORS 654.001 through 654.295.
Hist: OR-OSHA Admin. Order 4-1998, f. 8/28/98, ef. 10/1/98.
OR-OSHA Admin. Order 4-2012, f. 9/19/12, ef. 1/1/13.

437-004-9780 Methylenedianiline.

Definition:

Methylenedianiline or "MDA" means the chemical substance 4,4'-Diaminodiphenyl-methane (CAS 101-77-9), in the form of a vapor, liquid, or solid, including the salts of MDA.

(1) The employer is responsible to determine, before work begins, if any task or activity assigned to workers will result in potential exposure to Methylenedianiline.

(2) Work that exposes employees to MDA must comply with Division 2/Z, 1910.1050, Methylenedianiline, except that construction activities exposing employees to MDA must comply with Division 3/D, 1926.60, Methylenedianiline.

NOTE: Construction activities are building, altering and repairing and include painting.

Stat. Auth.: ORS 654.025(2) and 656.726(4).
Stats. Implemented: ORS 654.001 through 654.295.
Hist: OR-OSHA Admin. Order 4-1998, f. 8/28/98, ef. 10/1/98.
OR-OSHA Admin. Order 4-2012, f. 9/19/12, ef. 1/1/13.

437-004-9800 Hazard Communication Standard for Agricultural Employers.

NOTES: The Division 4, Hazard Communication Standard for Agricultural Employers (OAR 437-004-9800), focuses on those parts of the General Industry Hazard Communication Standard (Division 2/Z, 1910.1200) that describe the employer's responsibility to establish a workplace program and to communicate information to workers about the hazards of the chemicals used in their workplace.

The Division 4 standard does not include the parts of the Division 2, Hazard Communication Standard that apply only to producers, distributors, and importers of chemicals because these are not typical activities for agricultural employers. As stated in 437-004-9800(2) Scope and application, any agricultural employer who produces, imports, or distributes chemical products must follow the more detailed rules that apply to those general industry activities in Division 2/Z, 1910.1200.

The requirements of this Division 4, Hazard Communication Standard, are intended to be consistent with the Hazard Communication Standard for general industry as aligned with the provisions of the United Nations Globally Harmonized System of Classification and Labeling of Chemicals (GHS.)

(1) Purpose.

The purpose of this Division 4 Hazard Communication Standard (HCS) is to ensure that agricultural employers provide appropriate information to their employees about the hazardous chemicals to which they can be exposed at their workplaces. The responsibility of chemical manufacturers, importers, and distributors to provide this information is described in Division 2/Z, 1910.1200. The HCS for agricultural employers describes how this information is to be provided: through a comprehensive hazard communication program, including container labels and other forms of warning, safety data sheets and employee training.

(2) Scope and application.

(a) This standard applies to agricultural employers when a hazardous chemical is known to be present in the workplace in a way that employees may be exposed under normal conditions of use or in a foreseeable emergency.

(b) This standard also applies to agricultural employers engaged in crop- or product-related quality control- or quality assurance-type laboratory work.

NOTE: See Division 4/Z, 437-004-9860, Hazardous Chemicals in Laboratories, for rules that apply to other types of laboratory activities.

(c) Division 2/Z, 1910.1200, the Hazard Communication Standard for General Industry, including all mandatory appendices, applies to any agricultural employer who is a producer, importer, or distributor of hazardous chemicals, as those activities are defined in this standard.

(d) The following types of hazardous substances are exempted from the requirements of this standard, under the stated conditions or circumstances:

(A) Any hazardous waste defined by the Solid Waste Disposal Act, as amended by the Resource Conservation and Recovery Act of 1976, as amended (42 U.S.C. 6901 et seq.), when subject to regulations issued under that Act by the Environmental Protection Agency;

(B) Any hazardous substance as such term is defined by the Comprehensive Environmental Response, Compensation and Liability ACT (CERCLA) (42 U.S.C. 9601 et seq.), when the hazardous substance is the focus of remedial or removal action being conducted under CERCLA (such as a "Superfund" site) in accordance with Environmental Protection Agency regulations;

(C) Tobacco or tobacco products;

(D) Wood or wood products, including lumber if it will not be processed, where the manufacturer or importer has established that the only hazard posed to employees is the potential for combustibility;

> **NOTE:** Wood and wood products that are treated with a hazardous chemical covered by this standard (such as chemically pressure-treated wood); and wood that will later be sawed, cut or sanded, generating dust, is covered by this standard.

(E) Articles as defined in OAR 437-004-9800(11);

(F) Food or alcoholic beverages sold, used, or prepared in a retail establishment (such as a grocery store, restaurant, or drinking place), and foods intended for personal consumption by employees while at work;

(G) Any drug, defined in the Federal Food, Drug, and Cosmetic Act (21 U.S.C. 301 et seq.), when it is in solid, final form for direct administration to the patient (e.g., tablets or pills); drugs packaged by the chemical manufacturer for sale to consumers in a retail establishment (e.g., over-the-counter drugs); and drugs intended for personal consumption by employees while at work (e.g., first aid supplies);

(H) Cosmetics which are packaged for sale to consumers or intended for personal consumption by employees while in the workplace;

(I) Any consumer product or hazardous substance, defined in the Consumer Product Safety Act (15 U.S.C. 2051 et seq.) and Federal Hazardous Substances Act (15 U.S.C. 1261 et seq.) respectively, where the employer can show that it is used in the workplace for the purpose intended by the chemical manufacturer or importer of the product, and the use results in a duration and frequency of exposure not more than the range of exposures that could reasonably be experienced by consumers;

(J) Nuisance particulates where the chemical manufacturer or importer has established that they do not pose any physical or health hazard covered under this standard;

> **NOTE:** Nuisance particulate is synonymous with "particulate not otherwise regulated" (PNOR.) PNOR includes all inert or nuisance dusts, whether mineral, inorganic, or organic, that are not specifically listed in Division 4/Z, OAR 437-004-9000, Oregon Rules for Air Contaminants.

(K) Ionizing and non-ionizing radiation; and,

(L) Biological hazards.

NOTES: In addition to these exempted hazardous substances, the general industry Hazard Communication Standard [at 1910.1200(b)(5)] lists additional types of hazardous chemicals whose manufacturers are not covered by the Hazard Communication labeling requirements, because the products are already regulated by other labeling regulations. (For example, labeling of consumer products is regulated by the Consumer Product Safety Commission; and labeling of pesticide products is regulated by the Environmental Protection Agency.)

Nonetheless, employers must ensure that hazardous chemicals are properly identified in their workplaces, as described in 437-004-9800(5).

(3) Reserved.

(4) Written hazard communication program.

(a) Employers must develop, implement, and maintain an effective written hazard communication program that is specific to their workplace. It must include the following:

(A) A list of all the hazardous chemicals in the workplace using a product identifier that allows cross-referencing to both the product label and a Safety Data Sheet. (Lists may be developed for individual work areas, but the program-required list must include all hazardous chemicals present in the workplace to which the written hazard communication program applies.)

(B) A description of their procedures or methods for meeting the requirements of this Hazard Communication Standard for Agricultural Employers including paragraphs (5) Labels and other forms of warning, (6) Safety data sheets, and (7) Employee information and training.

(C) A description of the methods for informing their employees about the hazards of nonroutine tasks and the hazards associated with chemicals contained in any unlabeled pipes in their work areas.

(b) At multi-employer workplaces, employers who use or store hazardous chemicals in a way that may expose other employer's workers must also ensure that their hazard communication program includes their methods for:

(A) Making safety data sheets available to the workers of other employers;

(B) Informing other employer(s) of any precautionary measures needed for the other employer to protect their employees during normal operating conditions and foreseeable emergencies;

(C) Informing other employer(s) about the labeling system and other forms of warning in use. This includes how the employer will notify other employer(s) about areas where pesticides will be or are being applied and areas under a Restricted Entry Interval.

(c) Upon request, the employer must make their written hazard communication program available to employees, the employee's designated representatives, and the Administrator.

NOTE: Where employees work at more than one workplace, the written hazard communication program may be kept at the primary workplace as long as the information is made available for routine reference during the employee's regular shift and is readily available in an emergency.

(5) Labels and other forms of warning.

NOTE: Chemical producers, importers, and distributors have responsibilities for labeling products that are shipped and for providing those labels to end-users.

(a) Workplace labeling. The employer must ensure that the primary (shipped) labels are legible, in English, and prominently displayed on the container in the work area. Employers with employees who communicate in languages other than English may include information in the other languages, as long as it is also in English.

(b) Except as provided in (5)(d), (5)(e), and (5)(f), the employer must ensure that each container of hazardous chemicals is labeled, tagged or marked with either:

(A) The same elements required on the shipped label:

(i) Product identifier,

(ii) Signal word,

(iii) Hazard statement(s),

(iv) Pictogram(s),

(v) Precautionary statement(s), and

(vi) Name, address, and telephone number of the chemical manufacturer, importer, or other responsible party; OR

(B) The product identifier (that allows cross-referencing with the product's safety data sheet), and

(i) Words, pictures, symbols, or a combination that provide at least general information about the hazards of the chemical;

(ii) This alternative in conjunction with the other information readily available to employees under the employer's hazard communication program, must provide employees with specific information about the hazards of the chemical and appropriate protective measures.

(c) If an employer becomes aware of new information from an up-dated, product label about the hazards of a chemical, or ways to protect against the hazards, affected employees must be trained on this new information before the chemical is used again in the workplace.

(d) The employer may use signs, placards, or other written materials instead of labels on individual, stationary process containers. This alternative method must identify the specific container, meet the requirements in (5)(a) and (b) and be readily accessible to the employees in their work area.

(e) Labels are not required on portable, secondary containers of hazardous chemicals that are for immediate use.

(f) Pesticide application equipment (such as spray tanks and backpack-type sprayers) do not require labeling if the pesticide handlers have access to the pesticide product label during handling activities.

(6) Safety data sheets.

(a) Employers must have a safety data sheet (SDS) for each hazardous chemical that is used or present in the workplace in a way that may expose employees under normal conditions of use or in a foreseeable emergency. This includes residual pesticides encountered by workers doing field hand-labor operations.

(b) SDSs must be readily accessible to all employees on all shifts. Where employees work at more than one workplace, the SDSs may be kept at the primary workplace.

(c) SDSs may be kept electronically if they are readily accessible to employees during their work shifts and available at all times, especially during an emergency such as a power failure.

(d) SDSs must be in English. Employers with employees who communicate in other languages may maintain copies of SDSs in other languages as well.

(e) Where complex mixtures of chemical products have similar hazards and contents (for example, the chemical ingredients are the same, but the specific composition varies from mixture to mixture), the employer may use one SDS to apply to all of these essentially similar mixtures. The product identifier of each mixture, as identified on the product label, must be cross-referenced to the SDS used.

(f) If an employer becomes aware of new information from an up-dated SDS about the hazards of a chemical or about ways to protect employees from the hazards, affected employees must be trained on this new information before the chemical is used again in the workplace.

(g) Safety data sheets as employee exposure records. In accordance with Division 4/A, OAR 437-004-0005, Access to Employee Medical and Exposure Records, employers must retain either the SDS or some record of the identity of the substance or agent, where it was used, and when it was used; and, make this record available upon request to employees, employee's designated representatives, and to the Administrator.

Note: OAR 437-004-0005 refers employers to Division 2/Z 1910.1020. For more information about this requirement, see 1910.1020(d)(1)(ii)(B).

(7) Employee information and training.

(a) Give employees effective information and training on hazardous chemicals in their work area at the time of their initial assignment, and when a new physical or health hazard is introduced into their work area. Information and training may cover categories of hazards (examples include flammable liquids and pesticides) or specific chemicals.

(A) Chemical-specific information must always be available through labels and safety data sheets. Agricultural employees who mix, load, or apply pesticides; or otherwise handle hazardous chemicals must receive the full information and training required by this standard.

(B) If employees only handle chemicals in sealed, unopened containers, give them training to the extent necessary to protect them in the event of a spill or leak of a hazardous chemical from a sealed container.

(b) Inform employees of:

(A) The requirements of this training paragraph;

(B) Any operations in their work area where hazardous chemicals are present; and,

(C) The location and availability of the written hazard communication program, including the required list(s) of hazardous chemicals, and safety data sheets.

(c) Employee training must include at least:

(A) Methods and observations to detect the presence or release of a hazardous chemical in the work area (such as monitoring done by the employer, alarm systems, or characteristic odors;)

(B) The physical and health hazards of the chemicals in the work area;

(C) The measures employees can take to protect themselves from these hazards, including specific procedures the employer has implemented to protect employees from exposure to hazardous chemicals, such as appropriate work practices, emergency procedures, and personal protective equipment; and,

(D) The details of the hazard communication program as it relates to the employee's work activities, including an explanation of any alternative labeling or warning systems, possible exposures from non-routine tasks, and how employees can get and use the right hazard information.

(d) Agricultural employers must give all of their employees a copy of, or provide them with training that covers the information in the Oregon OSHA publication #1951 "Safe Practices When Working Around Hazardous Agricultural Chemicals."

(e) For employees doing only field hand-labor operations where their only potential exposure is to residual pesticides, employers may meet the training and information requirements of this rule by:

(A) Giving each employee a copy of or providing training that covers the information in the Oregon OSHA publication #1951, "Safe Practices When Working Around Hazardous Agricultural Chemicals"; and

(B) Providing information about the location and availability of, and ensuring that employees have access to safety data sheets.

(8) Trade secrets. There are special standards about the relationship of this standard to trade secrets. If those circumstances apply, follow Division 2/Z, 1910.1200(i) and its Appendix E.

NOTE: Division 2/Z 1910.1200(i) provides guidance for emergency medical personnel who need to obtain more detailed safety and health information about products with Trade Secret-protected ingredients. Appendix E to Division 2/Z, 1910.1200, Definition of Trade Secret, sets out the criteria to be used in evaluating trade secret claims.

(9) Subpoenas, citations, penalties.

(a) The Oregon Occupational Safety and Health Division has the authority under ORS Chapter 654 to issue a subpoena or any protective orders.

(b) Agency actions under ORS Chapter 654 and this Hazard Communication Standard for Agricultural Employers are enforceable by the issuance of additional citations and penalties pursuant to ORS 654.071(4), ORS 654.086(1)(d), or ORS 654.086(3). The Oregon Occupational Safety and Health Division may refer the matter to the Circuit Court in the county in which the proceedings are pending for enforcement of the subpoena.

(10) Phase-in dates for new rule requirements.

(a) By February 1, 2015, agricultural employers must train their employees about the new label elements (product identifier, signal word, hazard statements, pictograms, and precautionary statements); and, about the new, standardized, 16-section, safety data sheet (SDS) format. After this phase-in date has passed, this information must be included in the initial employee training in accordance with paragraph (7).

NOTES:
Chemical producers have until June 1, 2015 to be in compliance with all the modified provisions of the Division 2/Z Hazard Communication Standard (1910.1200) including those concerning classification, labeling, and safety data sheets.

(b) By June 1, 2016, employers must, as necessary, based on any new hazards identified by chemical manufacturers on updated labels and SDSs:

(A) Update their workplace hazard communication program, as required by paragraph (4); and

(B) Update any alternative workplace labeling used under paragraph (5); and

(C) Provide additional employee training in accordance with paragraph (7).

(11) Definitions.

Agricultural employer – See definition in Division 4/B, OAR 437-004-0100. Also, see "Employer" below.

Article - A manufactured item other than a fluid or particle:

(A) Formed to a specific shape or design during manufacture; and

(B) With end use function(s) dependent in whole or in part on its shape or design during end use; and

(C) That under normal conditions of use does not release more than minute or trace amounts of a hazardous chemical and does not pose a physical hazard or health risk to employees.

Administrator - The Administrator of the Oregon Occupational Safety and Health Division, or their designee.

Biological hazard (or biohazard) – An infectious or other biological agent (bacteria, virus, fungus, etc.) presenting a risk of death, injury or illness to employees. (Biohazards are excluded from the requirements of the HCS.)

Chemical - Any element, chemical compound or mixture of elements or compounds. Chemicals may be in solid, liquid, or gaseous form.

Chemical name - The scientific designation of a chemical according to the nomenclature system developed by the International Union of Pure and Applied Chemistry (IUPAC) or the Chemical Abstracts Service (CAS) rules of nomenclature, or a name that clearly identifies the chemical for the purpose of conducting a hazard classification.

Classification – The process of identifying the relevant data about the hazards of a chemical; reviewing that data to determine the hazards or effects associated with the chemical; and deciding whether the chemical meets the criteria and definitions in this standard. Classification for health and physical hazards includes the determination of the degree of hazard, where appropriate, by comparing the data with the criteria for the health and physical hazard categories.

Container – Any bag, barrel, bottle, box, can, cylinder, drum, reaction vessel, storage tank, or the like that contains a hazardous chemical. Pipes or piping systems, and engines, fuel tanks, or other operating systems in a vehicle, are not considered to be containers.

Crop- or product-related quality control- or quality assurance-type laboratory work - The sampling or testing of crops or agricultural products to discover defects, with the goal of improving or stabilizing production standards. This type of laboratory work at agricultural workplaces is covered by the requirements of the HCS.

NOTE: See Division 4/Z, 437-004-9860, Hazardous Chemicals in Laboratories, for rules that apply to other types of laboratory work.

Designated representative - Any individual or organization to whom an employee gives written authorization to exercise such employee's rights. A recognized or certified collective bargaining agent is automatically a designated representative without regard to written employee authorization.

Distributor – Any business, other than a chemical manufacturer or importer, that supplies hazardous chemicals to other distributors or to employers.

Employee – For the purpose of this rule, any worker who may be exposed to hazardous chemicals under normal conditions of use or in a foreseeable emergency. (Also, see definition of "Worker" in Disvision 4/B, OAR 437-004-0100.)

Employer - For the purposes of this rule, any person, corporation, association, or other legal entity, including a contractor or subcontractor, engaged in a business where employees may be exposed to chemicals. (Also, see definition of "Agricultural employer" in Division 4/B, OAR 437-004-0100.)

Exposure or **exposed** – An occurrence when an employee is subjected, in the course of employment, to a chemical that is a physical, health, or other listed hazard, including accidental or reasonably anticipated exposure. "Subjected" in terms of health hazards includes any route of entry into the body, including inhalation, ingestion, percutaneous, and skin contact or absorption.

Field hand-labor operations – Agricultural work done by hand or with hand tools, including the cultivation, weeding, planting, and harvesting of crops (including mushrooms) and the packing of produce into containers, whether done on the ground, on a moving machine, or in a temporary packing shed in the field.

Flammable liquids – See definition in Division 4/B, OAR 437-004-0100.

Foreseeable emergency – Any potential event that could result in an uncontrolled release of a hazardous chemical into the workplace. Examples include equipment failure, rupture of containers, or failure of control equipment.

GHS – Globally Harmonized System – The United Nations' system of classification and labeling of chemicals; an international approach to hazard communication that provides specific criteria for classification of chemical hazards and a standardized approach to label elements and safety data sheets. In 2012, OSHA revised the Hazard Communication Standard (29 CFR 1910.1200) to be consistent with the GHS.

Hand-labor operations See, Field hand-labor operations.

Handler (or Pesticide Handler) – includes any person, who is employed for any type of compensation by an agricultural establishment and who:

(A) Mixes, loads, transfers, or applies pesticides;
(B) Disposes of pesticides or pesticide containers;
(C) Handles opened containers of pesticides;
(D) Acts as a flagger for equipment or aircraft applying pesticides;
(E) Cleans, adjusts, handles, or repairs the parts of mixing, loading, or application equipment that may contain pesticide residues;
(F) Assists with the application of pesticides; or
(G) Performs other activities included within the definition of Handler by the Environmental Protection Agency.

NOTE: For more information, see the pesticide Worker Protection Standard in Division 4/W, §170. The term "handler" does not include an employee who only handles sealed, unopened pesticide containers or empty pesticide containers.

Hazard category – The divisions within a hazard class that compare the degree or severity of the hazard. For example, the chemical hazard classifications "oral acute toxicity" and "flammable liquid" both include four hazard categories based on specific criteria. Categories within a hazard class should not be compared with the categories of different hazard classes.

Hazard class – Describes the nature and effect of a physical or health hazard, such as "flammable solid", "carcinogen", and "oral acute toxicity". (Also, see "Classification".)

Hazard not otherwise classified (HNOC) – An adverse physical or health effect identified through evaluation of scientific evidence during the manufacturer's classification process that does not meet the specified criteria for the physical and health hazard classes addressed in Division 2/Z. 1910.1200. This does not extend coverage to adverse physical and health effects for which there is a hazard class addressed in 1910.1200, but the effect either falls below the cut-off value/concentration limit of the hazard class or is under a GHS hazard category that has not been adopted by OSHA. (One example is Category 5 oral acute toxicity.)

Hazard statement – A statement assigned to a hazard class and category that describes the nature of the hazards of a chemical, including, where appropriate, the degree of hazard.

Hazardous chemical – Any chemical that is classified as a physical hazard or a health hazard, a simple asphyxiant, combustible dust, pyrophoric gas, or hazard not otherwise classified.

NOTE: Division 2/Z, 1910.1200, Appendices A and B describe the criteria producers must use for determining whether or not a chemical is a health or physical hazard for purposes of this standard.

Hazard warning – The words, pictures, symbols, or combination on a label (or other appropriate form of warning) that communicate the specific physical and health hazards of the chemical(s) in the container. (See the definitions for "physical hazard" and "health hazard" to determine the hazards which must be covered by the manufacturer.)

HCS – The Hazard Communication Standard.

Health hazard – A chemical that is classified as posing one of the following hazardous effects: acute toxicity (any route of exposure); skin corrosion or irritation; serious eye damage or eye irritation; respiratory or skin sensitization; germ cell mutagenicity; carcinogenicity; reproductive toxicity; specific target organ toxicity (single or repeated exposure); or aspiration hazard.

NOTE: The criteria for determining whether a chemical is classified as a health hazard are detailed in Appendix A to 1910.1200 – Health Hazard Criteria.

Identity – See Product Identifier.

Immediate use – For the purpose of this rule, describes when a hazardous chemical will be used only within the work shift in which it is transferred, be under the control of and used only by the person who transfers it from a labeled container. Under these specific conditions, a portable, secondary container is exempted from the requirement for a workplace label. (See 437-004-9800(5)(e).)

Importer – The first business with employees within the Customs Territory of the United States that receives hazardous chemicals made in other countries for the purpose of supplying them to distributors or employers within the United States.

Label – An appropriate group of written, printed or graphic information elements concerning a hazardous chemical that is affixed to, printed on, or attached to the immediate container of a hazardous chemical, or to the outside packaging.

Label elements -- The specified product identifier, pictogram(s), hazard statement(s), signal word, and precautionary statement(s) that correlate to each chemical product's hazard class and category. Also, labels must identify and provide contact information for the product's manufacturer or other responsible party.

Manufacturer – See Producer.

Material Safety Data Sheet (MSDS) See, “Safety Data Sheet (SDS)”.

Mixture – A combination or a solution composed of two or more substances in which they do not react.

Nonroutine task – A work activity that occurs infrequently or that varies from what is considered a regular, standard, or normal task.

Pesticide handler – See Handler.

Pesticide, residual – See Residual pesticide.

Physical hazard – A chemical that is classified as posing one of the following hazardous effects: explosive; flammable (gases, aerosols, liquids, or solids); oxidizer (liquid, solid or gas); self-reactive; pyrophoric (liquid or solid); self-heating; organic peroxide; corrosive to metal; gas under pressure; or in contact with water emits flammable gas.

NOTE: Physical Hazard Criteria is available in Appendix B to Division 2/Z, 1910.1200.

Pictogram – A composition that includes a red bordered square set on its point, enclosing a black symbol on a white background that is intended to convey specific information about the hazard of a chemical. Eight pictograms are designated under this standard for application to specific hazard categories.

Precautionary statement – A phrase that describes recommended measures that should be taken to prevent or minimize adverse effects resulting from exposure to, or improper storage or handling of a hazardous chemical.

Producer – For the purposes of this rule, an employer with a workplace where chemicals are manufactured, processed, extracted, generated, formulated, or repackaged for use or for distribution.

NOTE: If you mix or blend chemical products for use in your own workplace, and the resulting mixture has no new chemical ingredients or new hazardous characteristics, you can use the SDSs for the component ingredients and you are not considered to be a “producer.” (An example is mixing granular fertilizers together for application on your own property.) However, if the combined chemicals react to create a new ingredient or the combination creates a new hazard, you become a “producer” and you must follow the more detailed rule requirements in the Division 2/Z, 1910.1200, Hazard Communication Standard.

Product identifier – The unique name or number used on the label and in the SDS that provides a means by which the user can identify the hazardous chemical. (Examples include the chemical name, Chemical Abstracts Service (CAS) Registry Number, or other precise designation of the substance.) The product identifier must allow cross-referencing of the product’s label with the product’s SDS, and the list of hazardous chemicals in the employer’s written hazard communication program.

Pyrophoric gas – A chemical in a gaseous state that will ignite spontaneously in air at a temperature of 130 degrees F (54.4 degrees C) or below.

Residual pesticide – Pesticide residue that remains on crops, soil, equipment or other work surfaces, after a pesticide application is completed and any label-required restricted entry interval (REI) has expired. For the purpose of providing hazard information, a Safety Data Sheet must be available for any pesticide that has been used at the workplace within the previous 30 days.

Responsible party – As used on a Label or Safety Data Sheet, someone who can provide additional information on the hazardous chemical and appropriate emergency procedures, if necessary.

Restricted entry interval (REI) – The time period that immediately follows a pesticide application (as specified on the product label) during which only trained and protected employees may enter into the treated area. (The treated area is the physical location where a pesticide is being or has been applied.)

Safety data sheet (SDS) – Written or printed information about a hazardous chemical that is prepared (generally by the manufacturer) in accordance with paragraph (g) of and Appendix D to Division 2/Z, 1910.1200.

Signal word – A word used to alert the reader of the product label to a potential hazard. The signal words used in this section are ‘‘DANGER’’ and ‘‘WARNING’’ ‘‘DANGER’’ is used for the more severe hazards, while ‘‘WARNING’’ is used for the less severe. These words are chosen by the manufacturer based on the classification and categorization of the chemical’s hazards.

NOTE: The EPA has jurisdiction over manufacturers of pesticides and currently has its own system of signal words used on pesticide labels.

Simple asphyxiant – A substance or mixture that displaces oxygen in the ambient atmosphere, and can thus cause oxygen deprivation in those who are exposed, leading to unconsciousness and death.

Specific chemical identity – See “Product identifier”.

Substance – Chemical elements and their compounds in the natural state or obtained by any production process, including any additive necessary to preserve the stability of the product and any impurities deriving from the process used, but excluding any solvent which may be separated without affecting the stability of the substance or changing its composition.

Trade secret – A confidential formula, pattern, process, device, information or compilation of information that is used in an employer’s business, and that gives the employer an opportunity to obtain an advantage over competitors who do not know or use it.

NOTE: Division 2/Z 1910.1200(i) provides guidance for emergency medical personnel who need to obtain more detailed safety and health information about products with Trade Secret-protected ingredients. Appendix E to Division 2/Z, 1910.1200 – Definition of Trade Secret, sets out the criteria to be used in evaluating trade secret claims.

Use – To handle, apply, transfer, or generate as a by-product, any hazardous chemical covered by the requirements of this rule.

Work area – A room or defined space in a workplace where hazardous chemicals are used, and where there are employees.

Workplace – An establishment, job site, or project, at one geographical location with one or more work areas.

Stat. Auth.: ORS 654.025(2) and 656.726(4).
Stats. Implemented: ORS 654.001 through 654.295.
Hist: OR-OSHA Admin. Order 4-1998, f. 8/28/98, ef. 10/1/98.
OR-OSHA Admin. Order 3-2014, f. 8/8/14, ef. 8/8/14.

437-004-9830 Retention of Department of Transportation (DOT) Markings, Placards and Labels.

(1) If you receive any container or vehicle containing hazardous material, marked to comply with U.S. Department of Transportation Hazardous Materials Regulations (49 CFR Parts 171 through 180), you must keep those markings in place and legible until the container is empty enough of product, residue or vapors to eliminate all hazards.

(2) Markings, placards and labels must be readily visible.

(3) For non-bulk packages that will not be reshipped, you are in compliance with this rule if a label or other acceptable marking is affixed to the container and includes the information required by the Hazard Communication Standard.

(4) For this rule, “hazardous material” and other terms not defined here have the same definitions as in the U.S. DOT Hazardous Materials Regulations (49 CFR Parts 171 through 180).

Stat. Auth.: ORS 654.025(2) and 656.726(4).
Stats. Implemented: ORS 654.001 through 654.295.
Hist: OR-OSHA Admin. Order 4-1998, f. 8/28/98, ef. 10/1/98.
OR-OSHA Admin. Order 4-2012, f. 9/19/12, ef. 1/1/13.

437-004-9850 Pipe Labeling.

(1) Scope and application. This rule applies to all pipes and piping systems that contain hazardous substances, transport substances in a hazardous state, or that use asbestos as insulation material. This rule does not apply to buried pipe.

(2) Definitions:

Asbestos: includes chrysoltile, amosite, crocidolite, tremolite asbestos, anthophyllite asbestos, actinolite asbestos and any of these minerals that have been chemically treated or altered.

Hazardous substances: any substance that is a physical or health hazard.

Health hazard: A chemical that is classified as posing one of the following hazardous effects: acute toxicity (any route of exposure); skin corrosion or irritation; serious eye damage or eye irritation; respiratory or skin sensitization; germ cell mutagenicity; carcinogenicity; reproductive toxicity; specific target organ toxicity (single or repeated exposure); or aspiration hazard. The criteria for determining whether a chemical is classified as a health hazard are detailed in Appendix A to 1910.1200 - Health Hazard Criteria, in Division 2/Z.

Physical hazard: A chemical that is classified as posing one of the following hazardous effects: explosive; flammable (gases, aerosols, liquids, or solids); oxidizer (liquid, solid or gas); self-reactive; pyrophoric (liquid or solid); self-heating; organic peroxide; corrosive to metal; gas under pressure; or in contact with water emits flammable gas. The criteria for determining whether a chemical is classified as a physical hazard are detailed in Appendix B to 1910.1200 – Physical Hazard Criteria, in Division 2/Z.

Piping system: includes single or multiple pipes of any kind in addition to valves and pipe coverings.

(3) Labeling.

(a) Label pipes that contain hazardous substances or transport substances in a hazardous state according to (A), (B), (C) and (D) below or otherwise identify them according to (3)(b) below:

(A) Positive identification of the hazardous contents of pipe must be by lettered labels. The label must give the name of the contents in full or abbreviated form.

(B) The label must identify the contents with enough detail to identify the hazard.

(C) Label wording must be brief, informative and simple.

(D) Use stenciling, tape, adhesives, markers or effective alternative means for labels.

NOTE: Substances "transported in a hazardous state" typically refer to the hazards of pressure and temperature. Examples include compressed air, hot water or steam, and cryogenic liquids or gases.

(b) The employer may use an alternative warning method, instead of affixing labels to individual pipes, if that method identifies the pipe(s) to which the warning applies and conveys the hazard information required by this rule. Examples include signs, placards, process sheets, or schematics posted on walls in the work area; or other such written materials. These alternative written materials must be readily accessible to the employees in their work areas during each shift.

NOTE: See OAR 437-004-9800(5) Labels and other forms of warning for other related requirements.

(c) Label pipes or piping systems that use asbestos insulation material to include the following statements:

(A)

DANGER
CONTAINS ASBESTOS FIBERS
MAY CAUSE CANCER
DO NOT BREATHE DUST
AVOID CREATING DUST

(B) Or, otherwise identify them according to (3)(b), above.

NOTE: See OAR 437-004-9800, Hazard Communication for Agricultural Employers and OAR 437-004-9050, Asbestos, for additional requirements.

(4) Location of labeling.

(a) Place the labeling near valves or flanges; adjacent to changes in direction or branches; where pipes pass through walls, floors or ceilings; and where confusion about the contents of the piping system may occur.

(b) Labeling must be applied, at a minimum, at the beginning and end of continuous pipe runs.

(c) For asbestos insulation, labeling on unobstructed continuous pipe runs must be at least every 75 feet.

Illustration 1
LOCATION OF LABELLING

Illustration 1 - Location of Labeling

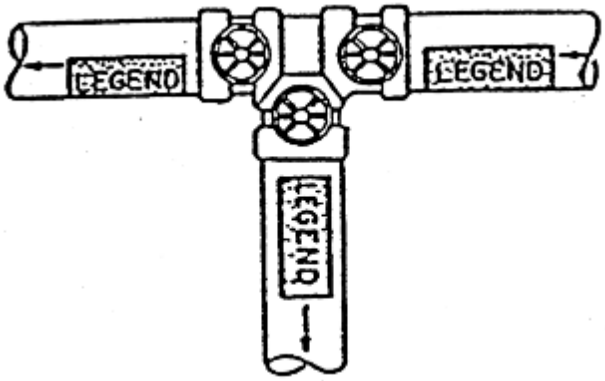

(5) Visibility.

(a) Where pipes are located above or below the normal line of vision, put the lettering below or above the horizontal centerline of the pipe, to facilitate visibility.

(b) If pipes are inaccessible, or at a distance that makes clear identification of the letters on a label difficult, use alternatives to labeling that meet all other requirements of this rule.

Stat. Auth.: ORS 654.025(2) and 656.726(4).
Stats. Implemented: ORS 654.001 through 654.295.
Hist: OR-OSHA Admin. Order 4-1998, f. 8/28/98, ef. 10/1/98.
OR-OSHA Admin. Order 4-2012, f. 9/19/12, ef. 1/1/13.
OR-OSHA Admin. Order 3-2014, f. 8/8/14, ef. 8/8/14.

Appendix A to 437-004-9850 Pipe Labeling (Non-Mandatory)

Table 1 - General Classification of Hazards of Materials Transported in Pipes With Suggested Labeling Colors

Classification	Color Field**	Color of Letters for Legends
Materials Inherently Dangerous		
Flammable or Explosive	Yellow	Black
Chemically Active or Toxic	Yellow	Black
Extreme Temperatures or Pressures	Yellow	Black
Radioactive	Yellow	Magenta
Materials of Inherently Low Hazard		
Liquid or Liquid Admixture	Green	White
Gas or Gaseous Admixture	Blue	White

** Alternatives to the colors suggested in Table 1 are acceptable if they meet all other requirements of the pipe labeling rule and are used consistently on all pipes in a given location.

(1) Color may be displayed on the piping by any physical means, but when it is used it must be in combination with labels.
(2) Color may be used in continuous, total length, or in intermittent displays.

Types and Sizes of Letters

(1) There must be contrast between color field and letters for readability.
(2) Use of letters of block lettering in sizes 1/2-inch (13 mm) and larger, is recommended. (Table 2)

Table 2 - Types and Styles of Letters

Outside Diameter of Pipe or Covering		Length of Color Field		Size of Letters	
in.	mm.	in.	mm.	in.	mm.
3/4 to 1 1/4	19 to 32	8	200	1/2	13
1 1/2 to 2	38 to 51	8	200	3/4	19
2 1/2 to 6	64 to 150	12	300	1 1/4	32
8 to 10	200 to 250	24	600	2 1/2	64
over 10	over 250	32	800	3 1/2	89

(3) For identification of materials in pipes less than 3/4-inch (19 mm.) in diameter, and for valve and fitting identification, the use of a legible tag is recommended.

Stat. Auth.: ORS 654.025(2) and 656.726(4).
Stats. Implemented: ORS 654.001 through 654.295.
Hist: OR-OSHA Admin. Order 4-1998, f. 8/28/98, ef. 10/1/98.
OR-OSHA Admin. Order 3-2014, f. 8/8/14, ef. 8/8/14.

437-004-9860 Hazardous Chemicals in Laboratories.

Definitions:

Carcinogens are chemicals that have been determined to cause cancer by the following sources:

(a) National Toxicology Program (NTP), Annual Report on Carcinogens (latest edition);
(b) International Agency for Research on Cancer (IARC) Monographs (latest edition);
(c) 29 CFR Part 1910, Subpart Z, Toxic and Hazardous Substances, Occupational Safety and Health Administration: or
(d) National Institute for Occupational Safety and Health (NIOSH), The Registry of Toxic Effects of Chemical Substances (latest edition.)

Crop- or product-related quality control or quality assurance–type laboratory work means the testing of crops or agricultural products to uncover defects, with the goal of improving or stabilizing production standards.

Laboratory use of hazardous chemicals means handling or use of such chemicals in which all of the following conditions are met:

(a) Chemical manipulations are carried out on a “laboratory scale;”
(b) Multiple chemical procedures or chemicals are used;
(c) The procedures involved are not part of a production process, nor in any way simulate a production process; and
(d) Protective laboratory practices and equipment are available and in common use to minimize the potential for employee exposure to hazardous chemicals.

Laboratory scale means work with substances in which the containers used for reactions, transfers, and other handling of substances are designed to be easily and safely manipulated by one person. Laboratory scale does not include those workplaces whose function is to produce commercial quantities of materials.

(1) If employees are engaged only in crop- or product-related quality control or quality assurance-type laboratory work, as defined in this rule, any work with hazardous chemicals must comply with the requirements in OAR 437-004-9800, Hazard Communication.
(2) If employees use carcinogens in laboratory research or crop- or product-related quality control or quality assurance-type laboratory work, then Division 2/Z, OAR 437-002-0391, Additional Oregon Rules for Carcinogens in Laboratories, also applies.
(3) If employees are engaged in the laboratory use of hazardous chemicals, as defined in this rule, then Division 2/Z, 1910.1450, Occupational Exposure to Hazardous Chemicals in Laboratories, applies to these activities.

Stat. Auth.: ORS 654.025(2) and 656.726(4).
Stats. Implemented: ORS 654.001 through 654.295.
Hist: OR-OSHA Admin. Order 4-1998, f. 8/28/98, ef. 10/1/98.
OR-OSHA Admin. Order 4-2012, f. 9/19/12, ef. 1/1/13.

– END OF DOCUMENT –